THE METALLURGY OF
ARGENTIFEROUS LEAD

By the same Author, and Uniform with this Volume.

I.

Just published, Third Edition, Crown 8vo, 546 pp., with 187 Illustrations, price 12s. 6d. cloth.

THE METALLURGY OF GOLD: A Practical Treatise on the Metallurgical Treatment of Gold-bearing Ores, including the Processes of Concentration and Chlorination, and the Assaying, Melting, and Refining of Gold. *Third Edition, revised and much enlarged.*

"This book thoroughly deserves its title of a 'Practical Treatise.' The whole process of gold milling, from the breaking of the quartz to the assay of the bullion, is described in clear and orderly narrative."—*Saturday Review.*

"Any one who wishes to have an intelligent acquaintance with the characteristics of gold and gold ores, the methods of extracting the metal, concentrating and chlorinating it, and further on of refining and assaying it, will find all he wants in Mr. Eissler's book."—*Financial News.*

II.

Just published, Second Edition, Crown 8vo, 376 pp., with 150 Illustrations, price 10s. 6d. cloth.

THE METALLURGY OF SILVER: A Practical Treatise on the Amalgamation, Roasting, and Lixiviation of Silver Ores; including the Assaying, Melting, and Refining of Silver Bullion. *Second Edition, enlarged.*

"Admirably and concisely done, and excellently illustrated. For chemists, practical miners, assayers, and investors alike, we do not know of any work on the subject so handy and yet so comprehensive."—*Glasgow Herald.*

"A practical book for practical men . . . . It is a convenient and useful work, and contains a good deal of original matter."—*Athenæum.*

III.

Crown 8vo, 336 pp., with about 100 Illustrations, price 10s. 6d. cloth.

A HANDBOOK ON MODERN EXPLOSIVES: A Practical Treatise on the Manufacture and Application of Dynamite, Gun-cotton, Nitro-glycerine, and other Explosive Compounds.

"A veritable mine of information on the subject of explosives employed for military, mining, and blasting purposes."—*Army and Navy Gazette.*

"A book which should be acquired by everyone who has to deal with either the use or the manufacture of the powerful explosives of modern days."
—*Board of Trade Journal.*

CROSBY LOCKWOOD & SON, 7, Stationers' Hall Court, London, E.C.

THE METALLURGY
OF
ARGENTIFEROUS LEAD

A PRACTICAL TREATISE
ON
The Smelting of Silver-Lead Ores and the Refining of Lead Bullion

INCLUDING REPORTS ON VARIOUS SMELTING ESTABLISHMENTS
AND DESCRIPTIONS OF MODERN SMELTING FURNACES
AND PLANTS IN EUROPE AND AMERICA

BY
M. EISSLER
MINING ENGINEER AND METALLURGICAL CHEMIST
FORMERLY ASSISTANT ASSAYER OF THE U. S. MINT, SAN FRANCISCO
AUTHOR OF "THE METALLURGY OF GOLD," "THE METALLURGY OF SILVER," ETC. ETC.

With One Hundred and Eighty-three Illustrations

LONDON
CROSBY LOCKWOOD AND SON
7, STATIONERS' HALL COURT, LUDGATE HILL
1891

LONDON:
PRINTED BY J. S. VIRTUE AND CO., LIMITED,
CITY ROAD.

PREFACE.

A LITTLE more than twenty years ago—in 1869—the active exploitation of the Eureka Silver-Lead Mines, in Nevada, was commenced by the erection of a small cupola furnace, by means of which practical demonstration was made of the fusibility of the Eureka silver-lead minerals. The existence of precious metal ores had been proved there six years before, but owing to the "base character" of the ores no attempts at treatment were made until the year 1869. This marked the beginning of the era of the American silver-lead industry on the Pacific coast; and as in the case of silver and gold, advance was rapidly made in methods and appliances for treating the large available stores of valuable mineral.

As an interesting historical fact, it may be mentioned that the first "parcel" of silver-lead ore on the Pacific coast was smelted by a Mormon named Isaac Grundy, back in the 'fifties. When Brigham Young learned that Johnston's army was coming to Utah, he sent Grundy down to Beaver County to obtain material for leaden bullets, to be used against the coming army. Grundy went to what was afterwards known as the Lincoln Mine, and getting out ore, he smelted in a small furnace several tons of bullion, which was sent to Salt Lake City and there moulded into bullets. Grundy may be considered, therefore, as the pioneer of the metallurgy of lead on the Pacific coast; and I have just learnt (August, 1891) that he died only a few weeks ago at Minersville, Utah, at the age of 80.

It affords me the highest gratification to be able to advert here to the fact that in 1870—soon after the completion of the first smelting furnace at Eureka—I visited that district for the purpose not only of studying the methods of smelting then in operation, but of acquiring a knowledge of the natural formation of the region in which the ores were found. I was engaged at the time in metallurgical operations at Mineral Hill, a silver-yielding district sixty miles north of Eureka, on the direct stage-route thereto, but without an intervening village, or even habitation, to break the monotony of the sage-covered deserts and mountain ranges. I was then and there convinced that metallurgy in settled and civilised countries was one thing, and metallurgy in the wilderness another. In the former case, the operator freely adapts his methods to suit his ores, but in the latter he has to adapt himself as best he can to circumstances.

It was, therefore, not surprising if the earliest results of smelting the newly-found ores of Eureka did not prove as satisfactory as might have been anticipated, considering that the ores were to be classed amongst the most tractable of the so-called "smelting ores," and the operations were conducted by able metallurgists of good European training. Their experience and skill notwithstanding, they had to acknowledge losses of 40 per cent. and over in lead, gold, and silver, while the *matte* and *speiss* produced, which were thrown as worthless on the waste-heap, assayed £16 and even more to the ton.

But these imperfect results and disappointments were soon followed by encouragements to the metallurgical world at large. Remedies were promptly sought and rapidly found; and the foundation of the American silver-lead smelting industry, now acknowledged as *perfect*, was here laid by the band of operators—Messrs. Arents, Keyes, Probert, Eilers, Hahn,* and others—by whom successive improvements were introduced in the construction of the cupola furnace. Their efforts were cordially appreciated by the lead smelters of Europe, who have adopted the improvements thus originated in America with results as gratifying as those secured on that continent. Foremost of all, especial thanks are due to Mr. Arents for his very ingenious device of the automatic syphon tap; and there are now very few cupolas in the German and Austrian smelting works which do not possess "den automatischen Arents' Stich."

Mr. Probert, also, whom I may call a natural-born metallurgist, has with great ingenuity produced a furnace capable of smelting 100 tons of ore in twenty-four hours, and of this furnace a full description will be found in the following pages. Ten years ago a furnace capable of smelting even 50 tons in the twenty-four hours was considered a metallurgical

---

* Mr. Hahn is at the present time in the Transvaal, engaged in the erection of the first lead-smelting works set up in South Africa, which I hope will lead the way to the development there of a new industry, placing the South African Republic also in the list of silver-producing countries.

wonder. No small service, therefore, has been rendered to lead miners by the attainment of this increased capacity, with its resulting economy; but, still further, thanks are due to Mr. Probert for his simple and cheap method of treating the argentiferous speiss which results from smelting operations where arseniurets and arseniates are mixed with the ores.

I may mention that American smelters have likewise directed much attention to the perfecting of the water-jackets surrounding the smelting zone, which are now universally in use; while great credit is due to many of the American manufacturing firms, who have given great attention to the construction, as well as the perfecting of the details, of the machinery and tools required in smelting operations.

In this volume, I have not thought it advisable to enter fully into the reverberatory furnace processes adopted in some of the English and Continental smelting works, but have limited myself to brief outlines of those processes, specifying the various sources from which my information has been derived, and which are open to those seeking further particulars. The student in search of information cannot do better than consult Dr. Percy's admirable treatise on the "Metallurgy of Lead," a work which I do not hesitate to characterise as by far the best ever produced upon the subject.

When in 1874-75 the silver-lead mines of New Caso and Modoc, and the Argus Range in Inyo County, California, were discovered, I had occasion to turn my experiences at Eureka to practical account, and I assisted in the construction of a furnace somewhat similar to the Castilian slag hearth. This furnace, I am glad to say, proved a success in operating on the oxidised ores of the district. On several occasions subsequent to the introduction of the more modern water-jacket furnaces, I paid visits to the Eureka (Nevada), the Leadville (Colorado), and the Utah mining districts; and in the following pages I have drawn upon these later experiences.

In the preparation of this volume I have thus endeavoured to present to the mining public a collation of facts connected with the development of the silver-lead industry since its inception in 1869. In distant and isolated mining regions, resort to the blast furnace is still the only practicable method of dealing with lead ores, and I have spared no pains in the effort to elucidate this portion of my subject. As new smelting districts are opened up, the operator who makes a beginning upon untried ground will do well to follow in the footsteps of his American *confrères*, whose varied experiences with different characters of ores he will find set forth in those reports of some of the ablest of the American smelters, which I have utilised, or given at length, in the following pages.

The results of the practical and analytical researches of the United States Geological Survey, made under the personal superintendence of Mr. Guyard, will be found of paramount importance, and I have treated them accordingly. The information thus gathered (including the light thrown on certain reactions during the smelting operations) would have remained a sealed book but for the generous solicitude which the American Government has extended to the mining community, for the necessary inquiries were far too costly to be undertaken by private individuals. Mr. Guyard, very rightly, chose Leadville as the locality for his investigations, and I am glad that through the kindness of personal friends in that district I have been enabled to utilise in this work material to which full publicity has not yet been given elsewhere.

In view of the serious losses which take place through volatilisation, I have been at some pains to describe the several varieties of condensing apparatus which have been tried or are in use, but the problem is not yet solved. Perhaps electricity may come to our assistance.

In conclusion, I may remark that I am not aware of any existing treatise covering the ground which I have endeavoured to traverse in these pages, and I sincerely hope that the work may be found of substantial utility by smelters in the various mining regions.

I may be allowed, also, to mention that the work has passed through the press during my absence in the Transvaal; and if it happen that any needful correction of the press has escaped the notice of my Publishers or of myself, I would ask for the indulgence of my readers in that respect.

17, Belsize Crescent, South Hampstead,
London, N.W.
August, 1891.

CONTENTS.

CHAPTER I.

INTRODUCTORY.

CHAPTER II.

REDUCTION OF LEAD ORES IN REVERBERATORY FURNACES.

CHAPTER III.

SMELTING OF LEAD ORES IN BLAST FURNACES.

CHAPTER IV.

CONSTRUCTION OF THE BLAST FURNACE.

CHAPTER V.

WATER JACKET FURNACES.

CHAPTER VI.

THE PROCESS OF SMELTING.

CHAPTER VII.

THE ROASTING OF LEAD ORES.

CHAPTER VIII.

PRODUCTS OF THE SMELTING OPERATION.

CHAPTER IX.

THE CONDENSATION OF LEAD FUMES.

CHAPTER X.

SEPARATION OF SILVER BY CUPELLATION.

CHAPTER XI.

EXTRACTION OF SILVER FROM LEAD AND REFINING OF SILVER-LEAD.

CHAPTER XII.

ASSAYING OF LEAD ORES AND THEIR PRODUCTS.

APPENDIX.

LIST OF ILLUSTRATIONS.

THE METALLURGY

OF

ARGENTIFEROUS LEAD.

CHAPTER I.

INTRODUCTORY.

EARLY WORKINGS OF LEAD—Occurrence and Distribution of the Ores—Physical Properties of Lead—Chemical Properties of Lead—Application of Lead in the Arts and Manufactures—Ores of Lead—Processes for Extraction of Lead from the Ore.

Early Workings of Lead.—Lead is mentioned by some of the oldest chroniclers as a metal well known to the Phœnicians, who obtained it from Britain, where it was already produced in Cornwall. From the remains of lead which have come to light bearing Latin inscriptions, it is surmised that the Cornish mines were subsequently worked by the Romans.

On the Continent there is evidence, dating back to periods before the Christian era, that lead was mined by the Romans and Greeks. The immense excavations at the Laurium Mines, near Athens, demonstrate that large quantities of metal were extracted there, and that the workers at the mines were possessed of sufficient metallurgical skill to effect a separation of the silver from the lead. The zinc ores, however, were left behind, showing that they did not know how to extract or use that metal.

At La Union, near Carthagena, in Southern Spain, where lead ores are also associated with zinc ores, I have seen evidence of Roman workings in the shape of copper tools, while the great extent of the old open cuttings shows that works were carried out there on a gigantic scale. Many of these mines are to-day incorporated in the Escombrera estate.

Occurrence and Distribution of Lead Ores.—The countries at present standing foremost as producers of lead are the United States of America, Spain, and Great Britain, but this most useful metal (as we shall presently show) is pretty well distributed over the whole globe.

In most countries where lead ores have been found, they are usually argentiferous, and consequently they are worked more for the silver than for the lead. The rocks in which the ore appears are of different geological periods, from the granite and clay slates of the Devonian to the Triassic formations. Some of the most productive lead mines in various parts of the globe are found in calcareous rocks.

If we pass in review the various deposits of lead ore which are and have been worked, we may take as a starting-point, in the eastern hemisphere, the silver-lead ores of Siberia, found in the Altai and Davouri mountain ranges. Then, going westward, we come to Austria-Hungary, to the mines of the Banat, those of the Erzgebirge in Bohemia, and the like at Przibram. In the Tyrol are the mines of Villach, and in the Carinthian Alps are the Bleiberg mines. Germany has lead mines in the Erzgebirge, near Tarnowitz, in Silesia, where the ores are found in dolomitic limestone. The Hartz Mountains are also celebrated for their deposits of lead ores. In the Upper Hartz are the well-known mining centres of Clausthal and Zellerfield, where mining operations were commenced in the sixteenth and seventeenth centuries. In the Duchy of Nassau there is a group of silver-lead mines, and in Westphalia also are some rich mines.

Spain was noted for its various mines under the Romans, who worked them for lead, silver, and copper along the southern slopes of the Sierra Nevada. The principal lead-producing districts have been Gado, in Andalusia, the mines near Carthagena, at La Union, Escombrera (which I myself have had occasion to visit), and the mines around Linares. In Western Spain, in the province of Badajoz, are numerous old lead mines.

In Central France the mines of Pontgibaud are the most noted. We also find lead ores in Savoy and the Alps; in the Pyrenees, located in the south-eastern corner of France; and also in some portions of Western France. In Algeria some silver-lead mines were worked at Kefoun Teboul, near La Calle.

Belgium has no lead-ore deposits proper, but the zinc ores of Nouvelle Montagne, near Verviers, carry a considerable percentage of lead. In Norway, especially in some of the northern districts, lead ores rich in silver are found, and in the south, also, we find impregnations of lead ore in feldspath, which pay for mining, as they contain 40 to 50 ounces of silver. Some true veins in a chloritic state have also been developed. On the island of Sardinia are some important lead deposits, and a large metallurgical establishment at Pertuzola, in the Bay of Spezzia, belonging to Mr. Henfrey, treats the ores. In Greece the most noted mines there are the Laurium, already referred to as of ancient standing.

Coming to Great Britain, lead ores are here to be found in three distinct geological zones—namely (1) the Cambro-Silurian zone or strata of Shropshire, Cornwall, Wales, Scotland, Ireland, Isle of Man; (2) the Devonian strata of Devonshire; and (3) the carboniferous limestone of North Wales.

In the United States of America lead ores are pretty well distributed over the whole area. They are found in the Appalachian mountain ranges, the easternmost chain of the Union, in the State of New York, and in some of the New England States. Going westward, important lead mines are found in Illinois, Wisconsin, and Iowa; and west of the Missouri River, Colorado is noted for the famous Leadville deposits.

The Rocky Mountains—farther north in Idaho and Montana territories—abound in lead deposits. The western slope of the Wahsatch range became noted for such mines as the Emma, Flagstaff, and others. The great basin between the Wahsatch and the Sierra Nevadas shows types of silver-lead deposits unequalled in the history of mining, the most noted being the Eureka mines in Nevada. California, also, has silver-lead in certain of its southern counties—such as Inyo, where the Cerro Gardo, Coso, and Argus range mines are located; while going farther south, into Mexico, we find large quantities of lead ores are being mined.

Australia, also, where the celebrated Broken Hill mines are yielding such large quantities of silver-lead, may be added to the countries producing lead, which has thus been found in quarters of the globe distinguished by very varied characteristics.*

Physical Properties of Lead.—The specific gravity of pure lead at 60° Fahrenheit is 11·445, according to Berzelius; ordinary lead, 11·385; when hammered it reaches 11·387. A freshly cut surface of lead is bluish-white, not unlike polished steel, but it soon becomes dull by oxidation; and, losing its bright metallic lustre, it acquires a colour which is commonly defined as lead-grey. It is the softest metal in common use, and may be easily cut with a knife, or scratched with the finger-nail.

Pure lead is very feebly sonorous, and emits a dull sound on being struck with a hard substance. The presence of a small quantity of impurities, especially antimony, imparts so decided a hardness, that in commerce the distinction of hard and soft lead is well understood to define the qualities in the market.

Although as crystalline as tin, it yields no crackling sound on bending. The crystalline character may be observed on skimming the surface of fluid lead shortly before solidification, when beautiful fern-leaf forms of crystals are manifested. Upon

---

* I may add that I have noticed indications of promising galena deposits in South Africa. M. E.

gently raising the solidified crust from the fluid lead beneath, octahedral forms may be distinctly observed amongst the projecting crystals. Similar forms may be traced in the crystals obtained in the desilverizing process of Pattinson, which will be described in a subsequent chapter.

The most striking view of the crystalline character of lead is obtained by heating a pig of lead upon the floor of a red-lead oven, and when it has nearly reached the melting point, breaking it with an iron paddle. The fracture thus obtained, with pure lead, presents an irregular columnar structure, somewhat like that of the starch of commerce. Indications of crystalline structure are also displayed etched upon the surface of lead left uncorroded in the operation of making white lead, and may be even traced on the portion of white lead detached.

At ordinary temperatures lead is very malleable, tough, and flexible. Its ductility is not great. Lead wire, of about $\frac{1}{16}$ of an inch in diameter, is manufactured for gardeners' use for nailing trees to walls. When heated to a certain degree, solid cylinders or pipes may be squeezed out in continuous lengths.

According to Regnault, the specific heat of lead between 10° C. and 100° C. is 0·0314; for molten lead between 350° and 450° Person found it to be 0·0402. Lead is easily fusible; the melting point, according to Person, is 334° C., corresponding to 326·2° of Regnault's air thermometer. When pure it solidifies abruptly; but a very little impurity, such as antimony, tin, or sulphur, produces a pasty condition before solidification. The latent heat is such that 1 part by weight, in passing to the solid state, evolves heat sufficient to raise 5·369 parts of water one degree Celsius. Its conductivity for heat and for electricity, taking silver as 100, is 8·5 for heat and 10·7 for electricity.

At a bright red heat fumes of oxide of lead are evolved, but lead cannot be distilled like zinc; at a higher temperature it burns with a vivid flame. Though tasteless, the metal has a characteristic odour when rubbed between the fingers. Lead may be welded cold. The experiment is best made by cutting lead with a sharp knife, and pressing the clean surfaces together with a twisting motion. Dobbs obtained a patent in 1805 for producing the cohesion of tin and lead in this manner by passing the ingots through rolls.

Chemical Properties of Lead.—In dry air, free from carbonic dioxide, lead preserves a bright surface; but on exposure to the ordinary atmosphere it suffers corrosion by oxidation, and formation of the hydrate and carbonate. Rain water, and all soft waters, act upon lead, evolving hydrogen, and readily dissolve a small quantity of the hydrate.

Lead dissolves in dilute nitric acid; with stronger acid, the action is arrested by the formation of white granular crystals of plumbic nitrate. It is but slightly attacked by either hydrochloric or sulphuric acid, unless concentrated and boiling. Pure lead leaves no insoluble residue in nitric acid. When antimony, tin, and sulphur are present, a white insoluble matter is left behind, consisting of the oxides of these metals, together with lead sulphate. If antimonic oxide predominates the residue has a yellow tint.

There are three oxides of lead—PbO, PbO_2, and Pb_3O_4, or thus $(PbO)_2 PbO_2$, and a suboxide (diplumbic oxide), Pb_2O.

Plumbic Oxide, PbO, *or Monoxide.*—Obtained by heating lead in air at a moderate heat, and constantly exposing a fresh oxidation. The product is separated from the grains of unoxidized metal by grinding and levigation. It then presents the appearance of a brownish yellow powder, called massicot. By heating white lead (plumbic carbonate) it is obtained of a clear lemon-yellow colour. At a heat a little above redness it melts, and crystallizes on cooling in yellowish-red scales, called litharge. Plumbic oxide dissolves in dilute nitric acid; caustic alkalies also dissolve it sparingly. It is used for making lead salts, driers for paint, and for glazing pottery.

Triplumbic Oxide, Red Lead, Minium, Pb_3O_4 or $2PbO,PbO_2$. —This oxide is obtained by submitting powdered litharge to a regulated heat in suitable ovens, where by constant stirring it absorbs oxygen, and assumes a bright red colour. It is attacked by nitric acid, which withdraws the protoxide, and leaves an insoluble pure coloured oxide, PbO_2. Red lead is completely dissolved if a little sugar be added to the dilute nitric acid. The commercial article generally contains a trifling residue of metallic lead and plumbic sulphate, besides such impurities as antimony, tin, and copper oxides, derived from the lead employed. By strongly heating, it is converted into the yellow plumbic oxide. It is used as a cheap substitute for vermilion.

Diplumbic Oxide, Pb_2O, is formed when the monoxide is heated to dull redness in a retort. A gray pulverulent substance is then left, which is resolved by acids into monoxide and metal. It absorbs oxygen with great rapidity when heated, and even when simply moistened with water and exposed to the air. Hydrochloric acid decomposes it with the aid of heat, forming plumbic chloride and evolving chlorine.

Plumbic Nitrate, $Pb(NO_3)_2$, is a salt which crystallizes with facility from water. Its hot solution is capable of dissolving plumbic oxide, and upon this reaction a process for making white lead has been founded, the excess of oxide being precipitated by a current of carbonic acid gas. Nitrate of lead is used in the chrome yellow style of calico printing.

Plumbic Chloride, $PbCl_2$.—This salt may be obtained as a curdy-white precipitate by the addition of hydrochloric acid to a solution of the nitrate or acetate. It is soluble in hot water, but only sparingly in cold. By slow cooling of a saturated solution it crystallizes out in characteristic needle-shaped crystals. At a moderate heat it fuses, and has the appearance of a horny mass when cold. A basic oxychloride, Pb_2OCl_2 is prepared on the large scale as a pigment, and known as oxychloride of lead paint. A still more basic compound is used as a yellow paint, and called Cassel yellow.

Plumbic Sulphate, $PbSO_4$, is a white salt, quite insoluble in water, but soluble in acids, potash, and many neutral salts, especially ammonic acetate.

Plumbic Sulphide, PbS, is precipitated from solution as a black powder by hydric sulphide. When the solution contains free hydrochloric acid, the precipitate is at first red, owing to the formation of $PbS + PbCl_2$, but this is soon converted into the black sulphide.

Plumbic Iodide, PbI_2, crystallizes from water in beautiful yellow scales. A soluble iodide forms an excellent test for the presence of a small quantity of lead.

Plumbic Oxalate, C_2PbO_4, is one of the most insoluble of lead salts in water, and is used in the quantitative analysis of solutions containing lead. It dissolves in nitric and hydrochloric acid.

The most characteristic tests for lead are the formation of black sulphide, the crystals of plumbic chloride soluble in hot water, and the yellow precipitate formed by soluble iodides or chromates. Heated on charcoal before the blowpipe with reducing fluxes, the compounds of lead yield a malleable bead of metal, and the charcoal immediately around the bead is at the same time coated with an incrustation of oxide, which is orange coloured while hot, but becomes lemon yellow on cooling.

Application of Lead in the Arts and Manufactures.—The metal is used very largely in the form of lead-pipe and as sheet lead, and in the manufacture of sulphuric acid. For this purpose large chambers of the metal have to be constructed for the condensation of the sulphurous acid fumes, and large evaporating pans of lead have also to be used for evaporating the weak sulphuric acid, or where sulphate salts are crystallized or brought in solution. In the manufacture of nitro-glycerine, the converting apparatus is made of lead, as that is the only metal capable of resisting the action of the sulphuric and nitric acid mixtures used in the production of this formidable explosive, which is now manufactured in such large quantities.

The use of lead in making shot and bullets is well known. When mixed with antimony it is largely consumed as type metal for printers' use; and when alloyed with tin, kitchen utensils are made of it. When rolled out in very thin sheets, the Chinese and Japanese use it as packing for tea. The metallurgist makes good use of lead in its various forms in the treatment of gold and silver ores.

White lead, an article of commerce which is largely consumed, absorbs a considerable quantity of lead; as also do sugar of lead, litharge, and lead oxide; and these, in their turn, are used in the manufacture of certain glass wares, in the glazing of pottery, and for other purposes.

Ores of Lead.—*Galena*, or *Sulphide of Lead*, occurs sometimes in fine crystals, generally cubical, the prevailing forms containing cubic with octahedral faces. The cleavage is very perfect on the cubical planes; fracture conchoidal, opaque; lustre, metallic; streak and colour, dead grey; hardness, 2·5; spec. gravity, 7·5. Pure galena contains 86·7 lead, sulphur 13·3. It usually contains a little silver, and is seldom found without it. Sometimes it assays up into the hundreds of ounces per ton, but the silver arises from the impregnated silver ores. Usually the fine-grained galena is richer than the cubical or foliated variety, with varying small proportions of copper, zinc, antimony, arsenic, iron pyrites, zinc, nickel, and cobalt, with a gangue of quartz, baryta, and calcspar, when, of course, one or both of the chief constituents are displaced to some extent.

In association with other substances the following varieties of ores are found:—

Clausthalite is an association of galena with selenium in varying proportions, and giving a horse-radish odour when fused. Galena is also found associated with sulphide of copper, mixed with arsenic, cobalt, and tellurium, as a telluride of lead, of a tin-white colour, called altaite.

Carbonate of Lead, *Cerussite*, or *White Lead Ore*, $PbCO_3$, contains 77½ per cent. of lead. It is, next to galena, the most abundant ore of lead, being the decomposition product of galena. This mineral occurs in crystals of the rhombic system; isomorphous with aragonite and saltpetre; or in fibrous, compact, and earthy masses. Hardness, 3 to 3·5; sp. grav. 6·4 to 6·6. In its purest state it is colourless and transparent as glass, with highly refracting properties. Its composition is lead oxide, 83·6; carbonic acid, 16·4. It effervesces with nitric acid, becomes black with hydric sulphide, and on charcoal is easily reduced before the blowpipe flame to a button of lead. It is a very abundant ore, and its varieties are: dioxylite, leadhillite, caledonite.

Sulphate of Lead, *Anglesite*, $PbSO_4$, contains 68·4 per cent. of lead, resembles the carbonate in colour and lustre of the crystals, but is distinguished by the absence of effervescence with nitric acid. Before the blowpipe flame it melts to a transparent glass, which becomes milky on cooling. Its composition is: lead oxide 73·7, and sulphur trioxide 26·3. Its colours are white, yellow, grey, and brown. Its varieties are: cupreous anglesite, containing some copper.

Phosphate of Lead, *Pyromorphite.*—This mineral exhibits a variety of colours between green, yellow, and brown—sometimes of a waxy yellow. Hardness, 3·5 to 4.0; sp. grav., 6·5 to 7·1, or slightly less when containing calcic phosphate. Composition: $Pb_3O_8P_2 + \frac{1}{3}PbCl_2 =$ phosphorous pentoxide, 15·71; lead oxide, 82·27; chlorine, 2·62. Some varieties contain a certain proportion of arsenic acid. On charcoal it fuses without reduction to a globule which, on cooling, assumes a crystalline polyhedral form—hence its name. It is often found in fine green crystals.

Arsenate of Lead, *Mimetite*, resembles pyromorphite in the crystalline form. The colour is pale yellow, orange yellow, or brown. Hardness and specific gravity similar to pyromorphite. It will give a bead of lead on charcoal before the blowpipe, giving off arsenical fumes.

Chromate of Lead, *Crocoite*, $PbCrO_4$, chrome yellow, with 68·7 per cent. of the oxide of lead. A beautiful, bright orange-red mineral, with adamantine lustre, orange-yellow streak, and translucent. Hardness, 2·5 to 3; specific gravity, 5·9 to 6·1; monoclinic, in oblique rhombic prisms. Before the blowpipe it blackens and decrepitates if quickly heated; but may be fused to a shining glass, containing globules of lead. Dissolves with effervescence in nitric acid, producing a yellow solution.

Molybdate of Lead, containing 61·5 per cent. of the oxide of lead. Lustre, resinous and adamantine; colour, wax yellow, sometimes greyish and brownish; streak, white, and fracture sub-conchoidal; hardness, 2·75; specific gravity, 6·3 to 6·9; crystallizes in the dimetric system. Before the blowpipe it decrepitates briskly, and becomes darker. With borax in the exterior flame it fuses readily to a slightly coloured glass. In the interior flame the glass is transparent, but on cooling it becomes all at once dark and opaque.

Some rarer varieties, which are to be found in particular localities, need not be mentioned here.

Processes for Extraction of Lead from the Ore.—A variety of processes are in use for the extraction of lead from its ores, the adoption of a particular process depending mostly on the character of the ore and the nature of the gangue. Local conditions will also influence the mode of treatment to a great extent, and an ore which could be profitably treated by a particular method in England will have to pass through an altogether different manipulation when mined in the great basin of Nevada and Utah, or in Mexico. For this reason it will be necessary to pass in review many individual establishments and explain the character of their ores, and to give the reasons why such or such a process has been adopted. This will then serve as a guide to the student or experimenter in determining his method of treatment if he should have occasion to erect works in a new locality.

The main points to be considered in selecting a mode of treatment are (1) the nature and richness of the mineral; (2) the nature of its gangue, if *siliceous* or *basic;* (3) the cost of fuel; and finally (4) the nature and cost of fluxes, and if fluxes can be obtained conveniently at all.

As to the *character* of ores, the subject may be dealt with in regard to the production of lead from *sulphuretted* ores, or to the production of lead from *oxidized* ores; but in neither case must it be supposed that the ores will be entirely free from the characteristics of the class to which they are not assigned;

thus sulphuretted ores will contain some oxidized products, and *vice versâ.*

In many cases metallurgical traditions, and the industrial and commercial habits of different countries, are considered sufficient reasons for not introducing a more rational mode of operation than that which happens to be in use.

Lead ores are generally found in association with silver, and the metallurgy of the two metals is closely connected. During the smelting process, the lead acts as a solvent to take up the disseminated particles of the precious metal, and collects it accordingly, separating it from its impurities, and carrying it in suspension from among the mass of earthy and metallic substances with which it may have been combined or mingled. Lead thus plays during smelting the same functions which mercury plays during the process of amalgamation.

The reactions which may take place between the lead and silver ores during smelting are the following :—

(*a.*) If sulphide of silver is smelted with lead, metallic silver is separated and forms an alloy with lead, while a portion of the liberated sulphur which has not volatilized combines with the lead to form sulphide of lead.

(*b.*) When sulphide of silver is smelted with oxidized lead ores, the sulphur passes off as sulphurous acid gas, and argentiferous lead is the result.

(*c.*) When metallic lead is fused with the oxide or the sulphate of silver, the silver is set free and combines with the lead; oxide of lead being produced in the one case, and oxide of lead and sulphurous acid in the other.

(*d.*) Lead readily alloys itself with silver, but exhibits much less affinity for the baser metals with which silver is usually associated.

(*e.*) When lead containing silver is subjected while in a fused condition to the action of a blast of air, the lead will be oxidized, while the silver remains unchanged.

The process of lead smelting, therefore, comprises (1) the production of an argentiferous lead alloy, and (2) the separation of the two metals from one another, the latter operation being called refining (which will be treated of in Chapters X. and XI.); but other systems of concentrating the silver ore are also employed. The production of the argentiferous alloy is carried out in reverberatory furnaces; or by the reduction of ores in hearths; or in shaft or cupola furnaces.

Many failures have happened in smelting operations through the idea prevailing that any ore carrying lead can be smelted by simply running it through a furnace. As a matter of fact the operation, as a rule, can only be carried out by a careful mixing of the ores with the fluxes which will make a fusible product, as there are very few localities where the ores will smelt without the addition of fluxes.

In the Western mining regions of America we find the following four methods in use:—

(1) Smelting the carbonate ores in reverberatory or water-jacket furnaces, with the addition of iron ore and lime, if the gangue of the ore is quartz; or adding quartz, or quartzose silver or gold ores, when the gangue is lime (generally a calc spar).

(2) Roasting the galena ores in heaps, then smelting as before; and, as not all the sulphur is driven away, it will react on the oxidized lead ores, and metallic lead is precipitated. Fluxing has to take place as before.

(3) Smelting for matte, in which case the lead is not run out as metallic lead, but is in combination with sulphur. With heavily sulphuretted ores a partial roast precedes this operation. The matte is afterwards treated to recover the silver-lead. Here also fluxing has to take place.

(4) Smelting galena with oxidized iron ores or roasted iron pyrites, the iron combining with the sulphur and reducing the lead. In this case there will be also valuable matte produced as a by-product, which is roasted and used as a flux again.

The results which are obtained in the treatment of lead ores thus depend largely on the admixture of other metals and earthy minerals which are associated with the lead. Such metals as arsenic, antimony, and zinc are volatile, and carry away lead, and so cause loss in smelting. They make the lead impure, as they, as well as copper, are reduced during smelting and enter into combination with the precipitated lead. Silica, also, causes a slagging of lead, and produces a loss. The most obnoxious substance, and the one which smelters fear, is zinc. Zinc oxide reduces only at very elevated temperatures, and causes wall accretions. It also produces a slag which is very infusible, and which can only be neutralised by the addition of fluxes, necessitating an increased consumption of fuel.

CHAPTER II.

REDUCTION OF LEAD ORES IN REVERBERATORY FURNACES.

OPERATION OF REVERBERATORY FURNACES—The English Process—The French Process—The Carinthian Process—Combined English and Carinthian Process at Tarnowitz—Precipitation—The Mexican Serpenton Furnace—Reduction of Ores in the Scotch Hearth.

Operation of Reverberatory Furnaces.—The reduction of lead ores in reverberatory furnaces is carried out without fluxes, simply by the aid of oxygen introduced from the atmosphere. It is applicable both to ores which have undergone a previous mechanical preparation by dressing or concentration, and to ores which have not been so treated—that is, in lump form—and the influence of foreign substances has to be taken into consideration. The process is used, in general, for ores very rich in lead and poor in foreign sulphides and earthy matter. Those ores which contain a large percentage of silica are difficult to treat thereby, but can be treated by it, when fuel is cheap, by the French system of precipitation. Silica forms with lead and iron oxide easily fusible silicates which cause losses.

The treatment in reverberatory furnaces may be subdivided into two methods—(*a*) the *Roasting reduction process*, or double decomposition, which consists in the removal of the sulphur, partly by roasting and partly by the reaction of the oxidized substances in the mass upon the sulphuretted ores; and (*b*) the *Precipitation process*, which is based on the fact that when galena is fused with metallic iron, copper, antimony, or zinc, it is decomposed with the formation of metallic lead. This is owing to the greater affinity of sulphur for iron than for lead, and therefore if iron is heated with galena, the lead may be almost entirely separated from the sulphur; and, since the tendency of iron to alloy with lead is very slight, the separation of lead can be effected almost completely.

If the galena contains also sulphide of silver, the latter will experience the same decomposition, and the lead and silver will be found in the form of an alloy, while the iron will be converted into the sulphide.

On the other hand, in the roasting reaction process, the galena is first roasted with access of air until the contents of the furnace have come to consist of oxide and sulphate of lead and undecomposed sulphide. At a low heat more sulphate of lead will be produced. The heat of the furnace is now raised for the *second period of the reaction*, during which a fusion takes place, and a mutual decomposition of the galena and oxide of lead ensues; the sulphur of the galena taking up the oxygen of the oxides forms sulphurous acid gas, which escapes, and metallic lead is precipitated. If the proportions are proper, the decomposition will be complete.

In the third smelting period, lime or coal is added to the half-fused slag to draw more lead out of it. The addition of lime forms a difficult fusible slag of silicate of lime, and the lime is therefore added to stiffen the mass during the third period, when a higher temperature prevails in the furnace.

What remains after the operations have been concluded is generally taken from the hearth, and treated for the remainder of its metal, usually in a blast furnace.

The operation in the reverberatory furnace ought to be conducted at a moderate temperature; and the ores ought not to be brought to their fusing point, but should be sufficiently softened so that the reactions between the oxides and sulphides can take place. An addition of such minerals as will prevent the fusion of the lead ores is of advantage. A mixture of lead carbonate and galena is well adapted for this treatment, as they react quickly on one another and effect a speedy separation of the lead.

According to the length of time required for the roasting, and the temperature employed to accomplish it, the relative amount of oxide and sulphate of lead will vary, and hence, in the second period of the process, the reactions will be different. Hence have arisen three different systems of smelting in reverberatory furnaces, known respectively (from the countries in which they are chiefly employed) as the *English*, the *French*, and the *Carinthian* processes.

The English process is employed for calcareous ores rich in lead. Upon treatment in reverberatory furnaces furnished with a sump, metallic lead, subsulphide and oxysulphide of lead will be formed; the two latter are decomposed by lime and coal.

The French process is adopted for ores containing pyrites and some silica; upon treatment in reverberatory furnaces with a sump, little lead and a large proportion of oxide of lead are formed, the latter of which is reduced by coal.

The Carinthian process is used for pure ores free from silica. They are treated in reverberatory furnaces with an inclined bottom, from which the reduced lead continually runs off, and the residues, which are rich in oxides, are mixed with coal which gives a fresh quantity of lead.

The English Process.—Generally large furnaces are in use, and the galenas are roasted at a rapidly increasing temperature, which produces a certain amount of sulphate of lead, and much sulphide of lead remains undecomposed. If the charge is exposed in this condition to a higher temperature, lead and subsulphide of lead and sulphurous acid will be formed.

$$2\ PbS + PbSO_4 = Pb + Pb_2S + 2\ SO_2.$$

The subsulphide of lead has the peculiarity, when allowed to cool slowly, of setting free a portion of its lead, and forming a higher and less fusible compound with sulphur, $Pb_2S = Pb + PbS$. In order to free this lead, the charge is cooled by opening the doors of the furnace. This is followed by another heating. The change of temperature is thus repeated several times, and in order that the charge may not fuse too easily, and may be kept spongy, so that the various reactions may go forward, some powdered lime is added, and at the same time a small amount of charcoal, to act as a reducing agent. The temperature in the furnace should not exceed a cherry-red heat. The addition of charcoal will reduce the lead sulphate to a sulphide, which, during the repeated roasting, is converted into oxide and sulphate, and these react on the sulphide.

When the lead ceases to flow from the tap-hole, the slags that remain in the furnace are drawn out into a trough filled with water, and as a considerable portion of valuable metal still remains mingled and combined with the earthy substances, they are subjected to a subsequent treatment in the slag-hearth, or in a shaft furnace, which will be subsequently described.

This process has been efficiently carried out in England on sulphuretted ores which contain small quantities of lime; but it is not adaptable to siliceous ores, which contain 3 to 4 per cent. of quartz, as it causes a scorification of lead at the higher temperatures required during the operation. The presence of a small quantity of sulphide of antimony will also be found detrimental, as it facilitates scorification.

The French Process.—When galena is subjected to a protracted roasting in a slowly increasing temperature, a large portion of ore will be found to take the form of sulphate of lead, a smaller that of oxide of lead, and some sulphide will remain undecomposed. If now the process be interrupted, and the temperature raised, without bringing the charge to a state of fusion, these compounds will so react upon each other that sulphurous acid, metallic lead, and oxide of lead will be formed, and the last may then be reduced by treating it with coal, when metallic lead will be the result. The reaction can be expressed by the following equation :—

$$\mathrm{PbS} + 3\ \mathrm{PbSO_4} = 4\ \mathrm{PbO} + 4\ \mathrm{SO_2}$$
$$4\ \mathrm{PbO} + 4\ \mathrm{C} = \mathrm{Pb} + 4\ \mathrm{CO}.$$

As this process is carried out at a lower temperature, more impure and siliceous lead ores may be worked by it than by the English process, the temperature not being high enough to cause scorification. With regard to the yield of metal, the process is more unfavourable when the quartz is above 5 per cent., on account of a scorification which then takes place at the lower temperature employed.

The furnace used in carrying out this system of smelting differs materially from that employed in England, although similar in having a hearth inclined toward a side aperture,

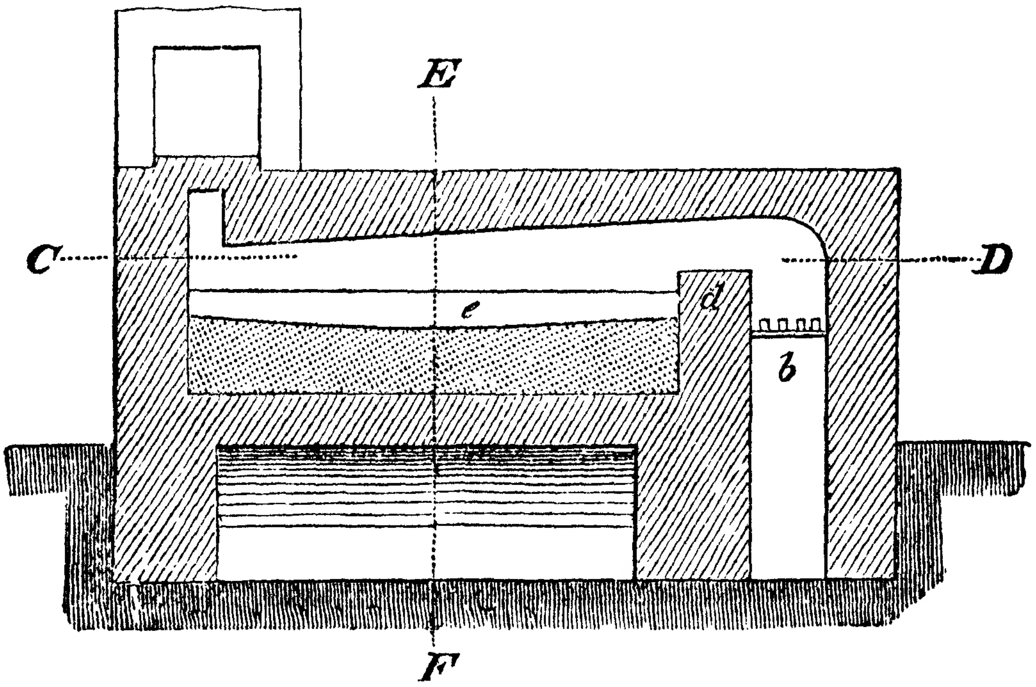

Fig. 1.—Section.

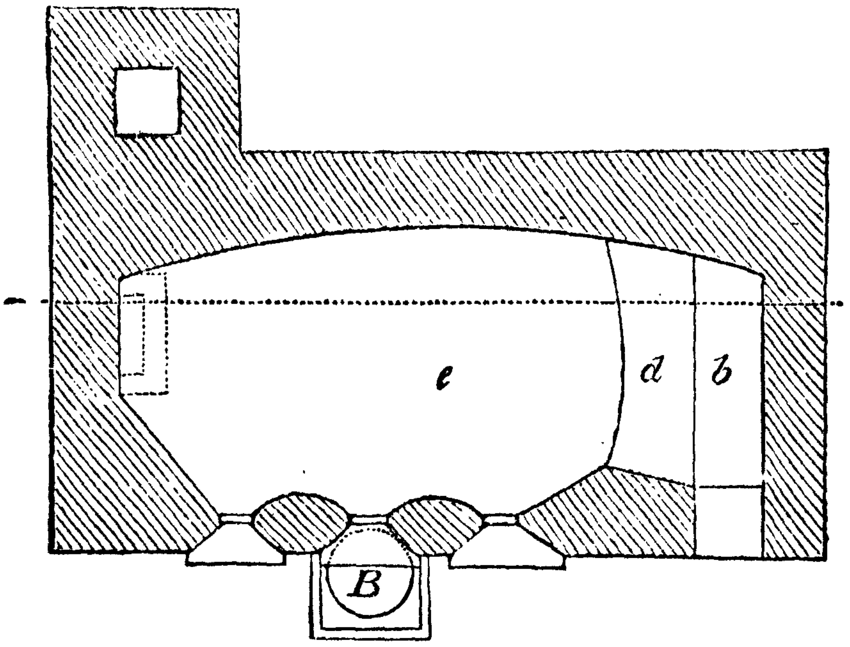

Fig. 2.—Plan.

French Reverberatory Furnace.—Scale 1 c. m. = 1 metre.

which serves for tapping off the fused metal.* It is, however, generally somewhat smaller and proportionately narrower. Figs. 1, 2, and 3 will serve to explain the general form and construction; Fig. 1 being a vertical section through the middle of the apparatus, Fig. 2 a horizontal section along the line, C D, and Fig. 3 a transverse section along the line, E F. The furnace is supplied with three doors, all on the same side and close together. Before the middle one is the exterior basin, B, into which the contents of the hearth may be tapped.

The chief dimensions of this apparatus are as follows:—The grate, *b*, is 20 in. by 4 ft. 4 in; the fire-bridge, *d*, is 23 in. wide; the hearth, *e*, 11 ft. by 6 ft. 3in. It is formed of a mass of tenacious clay resting upon a vault of granite. When carefully constructed and well beaten down, it soon becomes impregnated with materials of the ore that is fused upon it, and will then last a year without very material repairs. The arch, *f f*, it will be observed, corresponds, in its inclination toward the side at which the tap-hole is placed, with the inclination of the hearth beneath. In Bretagne the furnaces are constructed chiefly of heavy blocks of granite, well held together by iron rods and bearing plates.

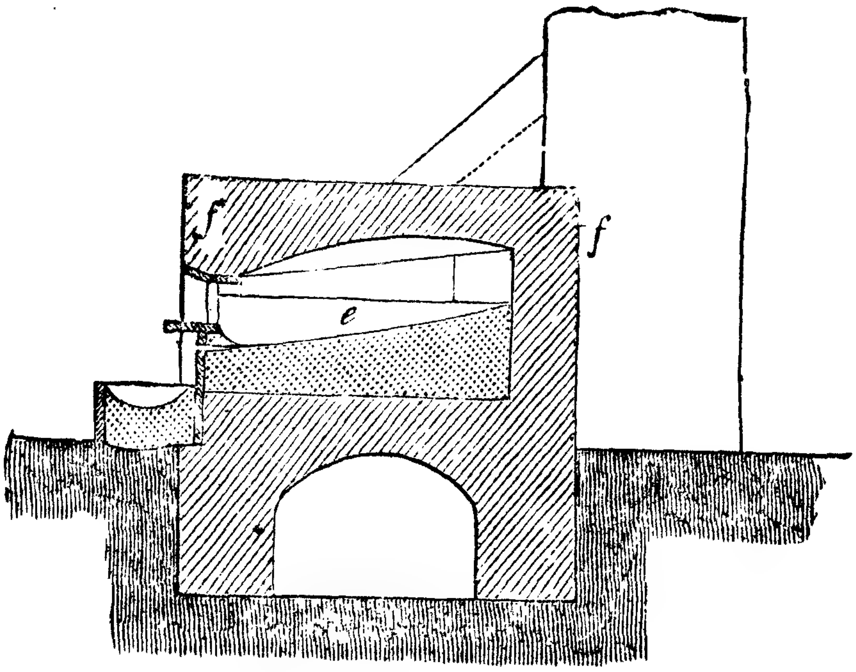

FIG. 3.—FRENCH REVEREBRATORY FURNACE.—Transverse Section.

---

* According to Dr. Lamborn, "The Metallurgy of Silver and Lead."

At Pullaouan, in Bretagne, the average quantity of the lead in the ores is 66 per cent., and the silver amounts to about 11 ozs. per ton. 2,600 lbs. of this ore are treated at once, being thrown through the doors upon the hearth and heated gradually, so that in five hours a dark red temperature is reached. Then the doors are closed and the charge heated until it begins to soften, when the workman stirs vigorously, and the reactions taking place, the reduced metal flows into the exterior basin. This stirring is succeeded by a second period of roasting for two hours, and a second stirring is given, which intermittent labour is continued several times. At the end of about thirteen hours the labourers throw in coal and wood, which reduce the oxide of lead, and the metal flows into the basin. A last roasting and stirring is then given, and the slags are drawn from the furnace and broken up for fusion in a cupola furnace.

The time usually necessary for treating a charge is sixteen hours, two labourers being required for each reverboratory. From 2,600 lbs. of mineral are given by this treatment 1,216 lbs. of lead, containing 21 ozs. of silver per ton, and 840 lbs. of slag, containing by assay 38 to 39 per cent. of lead, and not more than 3 ozs. of silver to the ton.

The treatment of 1 ton of ore costs 14s. 6d. The lead is purified by stirring with beams of wood, and repeated skimmings, and is cast into moulds of iron, and passed to the cupelling furnace.

Upon account of the comparatively low temperature employed in this process, the ores are not so much disposed to clot in the roasting as in the treatment by the English method, and hence a more impure mineral may be employed. The presence of the sulphide of iron aids in the production of sulphate of lead, but increases the amount of slags. In England a larger proportion of lead is extracted from the ores, and hence the process there in vogue is superior to that just described.

At Bleiberg, in Belgium, furnaces are constructed which have a fire-place on each side with one common flue. One long side slopes towards the other long side, and the hearth forms a sort of basin in the centre, as the short sides of the hearth slope toward the middle of the furnace, where the same communicates with an outside sump. These furnaces are of larger dimensions and capable of holding 2 tons at a charge. After heating the ore mass five to six hours, the oxidation will have produced so much sulphate of lead, that at an increased temperature the sulphate will react on the sulphide, and metallic lead will be produced. After working the charge for some time glowing coal is added on the hearth and stirred thoroughly with the now pasty mass, which causes the separation of a further quantity of lead. After twelve hours' heating the lead extraction can be considered completed, and the slag is withdrawn.

The Carinthian Process.—This process, also, is based on the chemical reaction during the roasting process, whereby galena is transformed into subsulphide of lead, which, being acted upon by the oxidised lead ores, gives up metallic lead. The lead so produced is not collected inside the furnace in a sump, but is allowed to flow out on the inclined hearth outside the furnace into a basin, and this prevents large losses of lead by volatilization. The process requires, of course, repeated stirring, and after a certain period the mass will be composed principally of oxide and sulphate of lead, with little undecomposed galena, and some oxysulphide of lead, and no lead will flow from this mixture. Now coal is added and the heat raised, reducing the oxides of lead to metallic lead; and some of the oxides, acting on the non-reduced sulphides, also produce metallic lead with copious evolution of sulphurous acid.

The slags produced by this process are generally too poor to be reworked.

Combined Carinthian and English Process.*—The ores which are treated at Tarnowitz, by a combination of the

---

* "Preussische Zeitschrift," vol. xix.

Carinthian and English methods, contain only a small percentage of silica and iron, considerable zinc, some lead carbonate, which assists the roasting reaction, some clay and lime;

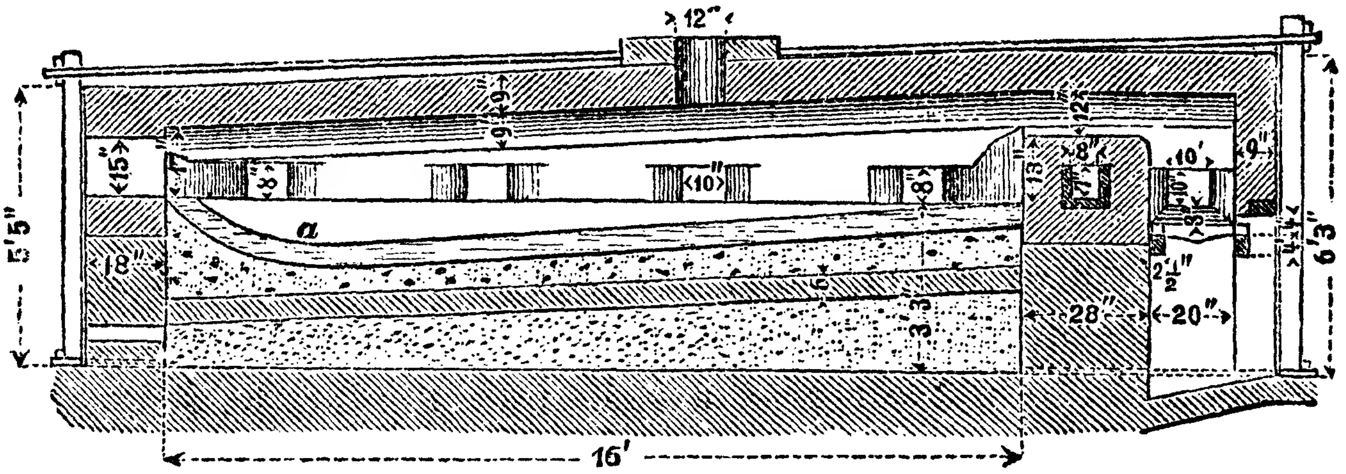

Fig. 4.—Section.

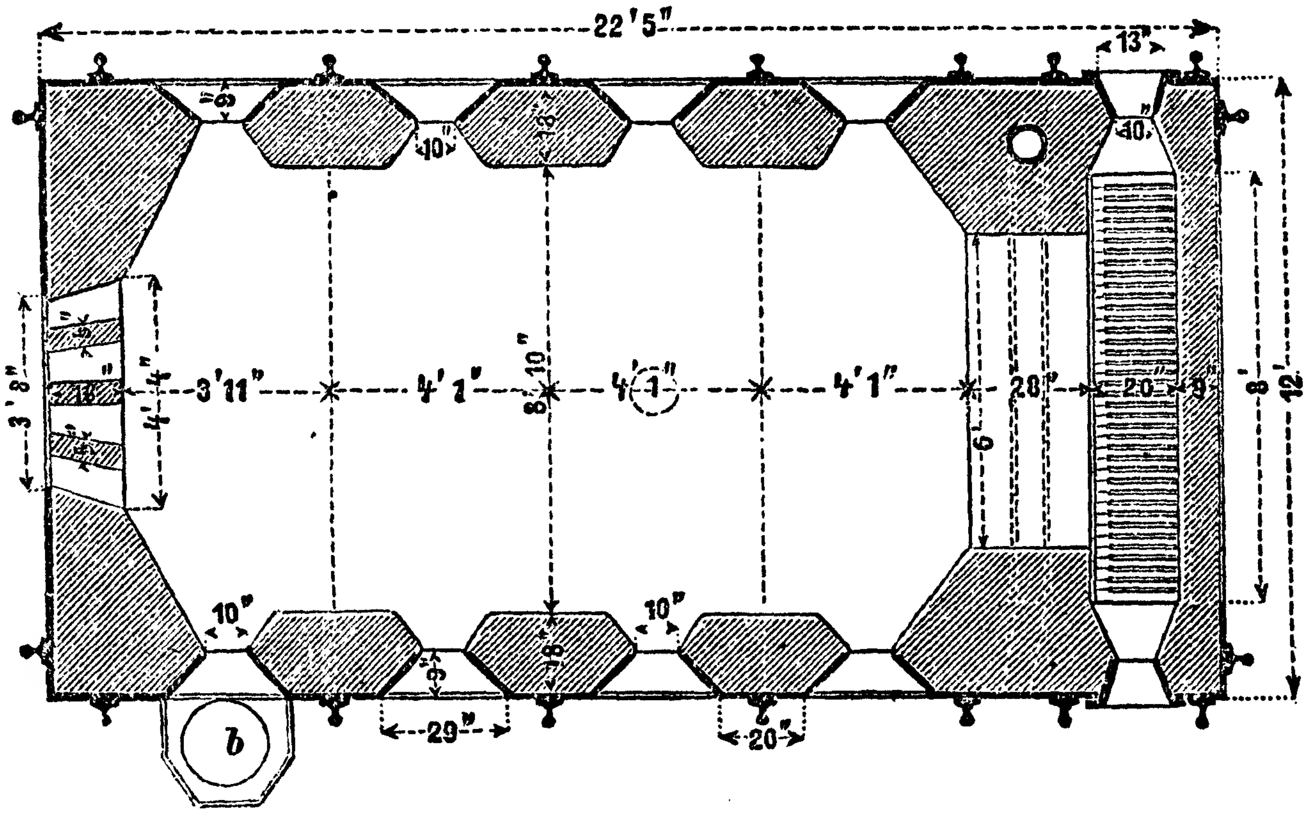

Fig. 5.—Plan.

The Tarnowitz Reverberatory Smelting Furnace.

and the assays show that their lead contents vary from 69 to 74 per cent. of lead, 0·073 to 0·076 per cent. of silver.

The larger English roasting reduction furnaces are employed, and the roasting is conducted very slowly on the Carinthian principle. The hearth (Figs. 4 and 5) is 17 ft. long by 9 ft. wide, and there are four working doors on each side, as shown in the figures. The hearth is prepared by first beating down a good layer of brasque, composed of clay and coke dust, and then the slag layer is melted on top of it.

The furnace is charged with 3,000 lbs. of ore, and during one twelve-hour shift one smelter and two helpers are required. The ores are introduced into the previously heated furnace through the working doors, and roasted at a moderate fire for three or four hours, with stirring only at intervals of thirty minutes; then the firing is increased, and the mass often stirred for about three hours, when the separated lead flows into a sump at the back portion of the hearth near the flues, which is tapped after one hour and a half into the kettle, *b*, located outside the furnace. Toward the end of the roasting operation from 150 to 300 lbs. of carbonate of lead and lead fumes are added to the charge.

The lead produced at the beginning of the operation contains 0·1075 per cent. of silver, whereas the lead produced from the subsequent reaction of the same charge contains only 0·05 per cent. of silver.

After the roasting period the working doors are closed, the heat is increased and, if necessary, some lime is added; and after about two hours the lead is tapped again, then fired again and stirred, and the skimmings of the molten lead from the kettle are now added with some coal, and when these have been reduced the slags are withdrawn from the furnace.

When a charge is finished the hearth is repaired, the furnace allowed to cool, and then a fresh charge is introduced. The working of one charge requires eleven hours, of which seven hours fall to the reaction period. The rich residues are smelted in shaft furnaces, together with poorer lead ores, which have been previously roasted.

The yield of lead in the reverberatory furnace is stated to be 45 to 55 per cent., but the residues contain over 50 per cent. of lead and 0·017 per cent. of silver. Every 100 parts of ore give 25 to 35 parts residues. The loss of lead is 4 per cent. by the whole operation, and the consumption of coal amounts to 30 kilograms of coal to 100 lbs. ore.

The advantage claimed for this process is, that at a low temperature large charges are worked, whereby the production is cheapened and the loss is smaller, as the process is interrupted long before all the lead is reduced; and as the residues are smelted in blast furnaces the loss of lead is reduced to a very small quantity.

Precipitation.—When the ores contain too large a percentage of silica or silicates to treat them by the preceding methods in reverberatory furnaces, the galenas are decomposed by means of metallic iron. The furnaces employed are generally of small dimensions, their capacity not exceeding 10 cwt. at one charge, which permits of a high temperature being maintained.

During the reaction a large percentage of matte is produced, as the galena when heated with iron decomposes, producing metallic lead and sulphide of iron, which enters into combination with a part of the undecomposed galena, producing matte. During the smelting operation, as this is carried out under free access of air, oxides and sulphates of lead are formed, which also assist in the reduction of the galenas. The consumption of iron in this process is very large, and this makes it a costly method.

Rivot* recommends the following system in preference. The galena is first transformed as completely as possible into oxide and sulphate of lead, by longer roasting at a lower temperature; then the roasting mass, mixed with ½ per cent. of coal slack, and 12 per cent. of quartz sand, is quickly heated to a cherry red heat; by this operation oxide of lead is reduced; but the chief aim is the expulsion of sulphuric acid, partly as sulphurous acid, by the reaction of carbon, and partly in the form of vapour by the silica, the latter forming a silicate of lead. If the tumefaction of the mass ceases, about 10 per cent. of metallic iron is mixed up with it, when silicate of iron will be formed, and the metallic lead separated.

If the ores contain silver, the slags resulting from this process

---

* "Métallurgie du Plomb et de l'Argent, 1860."

will be poor in silver, as they mostly contain oxidised substances, but the yield of lead is smaller than by the preceding method.

The Mexican Serpenton.—A furnace of peculiar construction, known as the *serpenton*, has been introduced by Mr. C. Schuhardt at the Sierra Mojada Mines, in Mexico, to which my attention has been drawn by a paper read before the Institute of American Mining Engineers by Mr. R. E. Chism. The serpenton is, no doubt, crude in conception, but still effective in manipulation to a certain degree, and with certain improvements could be made to work. I am induced to give Mr. Chism's description of the furnace, as showing what people with no metallurgical skill or knowledge are competent to accomplish, and illustrating once more how "necessity is the mother of invention." I do not look with any enthusiasm on the Mexicans as "born metallurgists"; but certainly, considering their formerly isolated condition, and the absence of any improved machinery, they deserve credit for the large quantity of precious metals which they have been able to

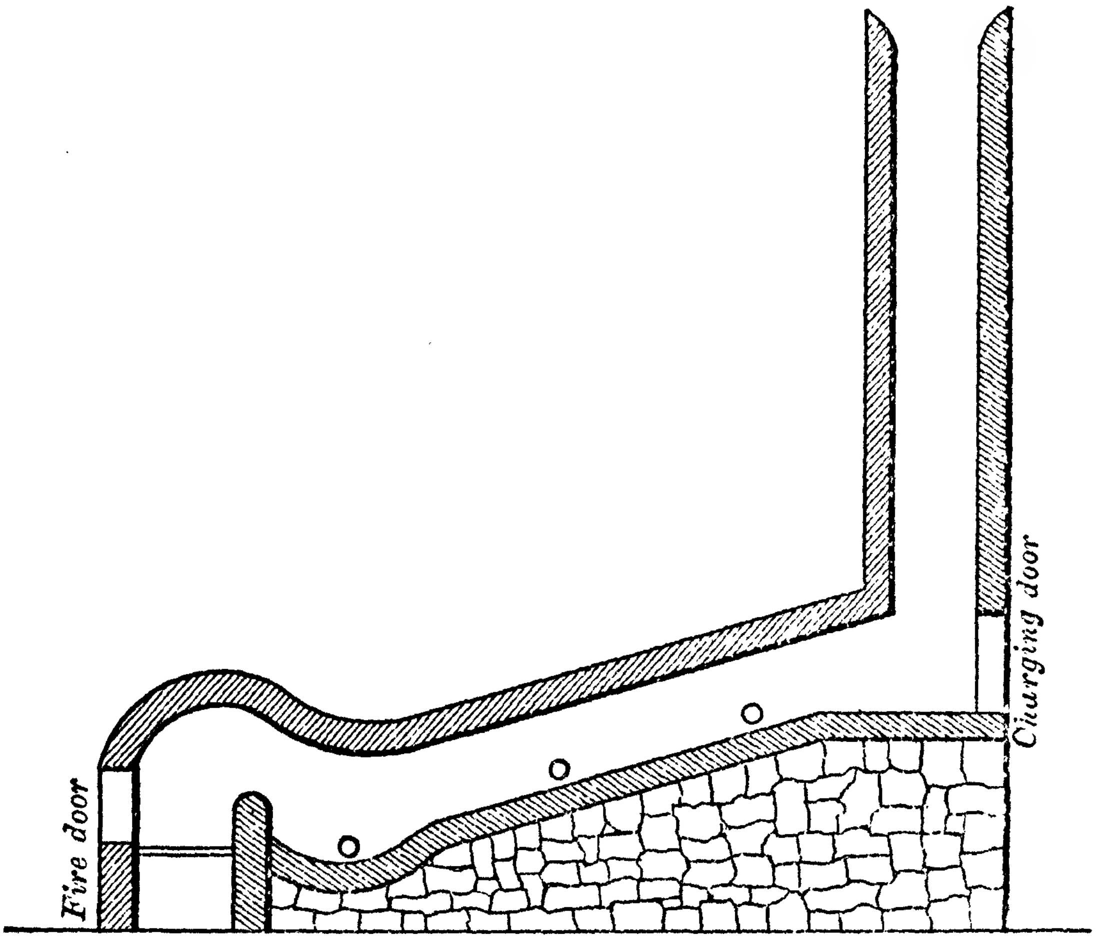

Fig. 6.—Mexican Serpenton Furnace.

produce, and for the ingenious, even if crude, devices which have originated with them. Mr. Chism thus describes the serpenton and its workings :—

"One third of the lead produced by the Esmeralda Company is made by the serpentons. These are said to have been introduced into Sierra Mojada by the late Charles Schuhardt. Probably they were an invention of his own. I have never seen anything precisely like them, or any description of them in any work on metallurgy.

"As will be seen in Fig. 6, they are reverberatory furnaces of a peculiar kind. They are built, of course, of the all-pervading adobe, with a stone lining to the inclined portion of the hearth and to part of the chimney. On opening the fire door of a serpenton, we find that it gives admission to a fire box about 1 meter long and 50 centimeters wide, with an ash pit below, from which it is separated by grate bars of adobe or iron. The fire box is vaulted over in hemispherical shape, and has at the inner end a fire bridge about 30 centimeters high. Back of the fire bridge we find a basin or sump, likewise about 1 meter long and 50 centimeters wide, which is lined with refractory clay, and well fettled with slag. The lowest point of the sump is at one side, where a suitable tap hole is provided.

"Leading backwards from the sump and upwards at an angle of about fifteen degrees is the hearth, about 4 meters long by 50 centimeters square section, floored and partially lined with refractory stone. The hearth opens directly and with the same dimensions into a chimney, about 5 meters high above the level of the hearth floor. At the same level, and opening into the back of the chimney, is the charging door, of the same dimensions as the section of the hearth.

"The hearth is covered or arched over throughout its entire length, and is provided with two or three rabbling and inspection holes, each about 20 centimeters square, placed at various points along its length, at the level of its floor.

"The process of smelting in the serpenton is admirably simple. At the Esmeralda works a smelting mixture is made with 5 arrobas of ore from the Esmeralda mine, 2 arrobas from the Plagas mine, and 5 from the S. Salvadar mine, to which are added 1 arroba of litharge, and 3 arrobas of lead scum, skimmed at the remelting furnace from the top of the bars. This mixture is thrown by shovelfuls into the charging door of the serpenton, each shovelful of the charge being mixed with four shovelfuls of charcoal dust.

"On starting to smelt, after the furnace has been heated up, about one-third of the length of the hearth is charged with the smelting mixture, spread out in a layer from 5 to 10 centimeters in depth.

"Of course, the first action of the flames is to drive off the moisture, after which comes the ignition and burning of any sulphur that may be present, and the liberation of carbonic acid. Metallic lead and litharge are soon formed, which make a slag with the small amount of silica present, and form a crust on top of the ore layer. This being the case, the charge is skimmed, so to speak, the crust being moved downward on the hearth towards the fire box in fragments, while the under portion of the charge is rabbled, so as to be better exposed to the action of heat.

"These operations are repeated in succession, fresh ore being charged as above, whenever deemed necessary, and the former charge being moved downward until, in three or four hours after charging, the sump is full of melted lead, on top of which floats a highly basic slag, only made fusible by the large quantity of lead, sometimes as high as 35 per cent., which it contains. The lead is run off from the sump from time to time into a basin or receptacle dug in the ground at the side of the furnace, and cools into rude slabs of an oval shape. The work is done with the charging door at the end of the furnace entirely open, entailing an immense loss of heat and waste of fuel. Indeed, most of the serpentons have no doors at all to this opening, and it is impossible to make the smelters understand that any economy would result from their use.

"The cost of maintaining these furnaces is something enormous. The lining is continually eaten away to supply the silica needed for the slag, and the furnaces get out of order or even fall altogether, a mass of ruins, after a few days' work. Their working time does not average over six days, during which time one furnace smelts about 20 cargas of ore with its mixture per day, with a daily production of 10 cargas of lead bullion.

"The cost of running one serpenton to work 20 cargas in 24 hours is 44·75 dollars. The cost per ton of 2,000 pounds is 14·99 dollars.

"Considering the cheap construction of the serpenton, its use of raw fuel (branches and twigs of resinous wood, quick burning, and giving a long flame are the favourites), the comparative simplicity of its operation, and the absence of expense for blast, it seems as if the serpenton, could it be made more durable, and protected by the use of proper fluxes, would be far superior to the upright furnace for pure carbonates and galenas, in enterprises where capital is limited, and modern machinery not available.

"The metal from the upright furnaces and serpentons is remelted for casting into pigs of the usual commercial form. This is done because the original bars, being cast in depressions in the floors of the casting room or alongside of the serpentons, are covered with sand and dirt, besides being in shapes and sizes too irregular for exportation.

"The furnaces, called *galemes*, in which the remelting is done, do not call for minute description, being in form and construction essentially the same as the serpentons, except that the hearths are only about two-thirds as long. The masses of lead are charged upon the upper part of the inclined hearth, and the melted lead flows down into the sump of the furnace, whence it is tapped off into an iron pot heated from below, the surface skimmed with a perforated ladle, and the clear metal ladled into the moulds. The cost of resmelting one ton of lead is 4·65 dollars. This charge could be avoided by having between each pair of upright furnaces a pot to receive the lead. Into this the lead would run as fast as smelted; it could be kept hot by a few brands underneath the pot; and the lead from the serpentons could be added as fast as sufficiently cool to be handled, and the whole ladled off into the moulds without further expense.

"The average silver contents per ton of lead of 2,000 lbs. is 83·6 ounces."

Reduction of Ores in the Scotch Hearth.— This system has been introduced in the counties of Durham, Cumberland, and Northumberland, from America. The furnace as now used in Missouri is constructed as shown in the accompanying cuts, of which Fig. 7 is a vertical section, and Fig. 8 the ground plan.

In some of the lead smelting works in South-western Missouri, the reduction of the ores is carried out on hearth.

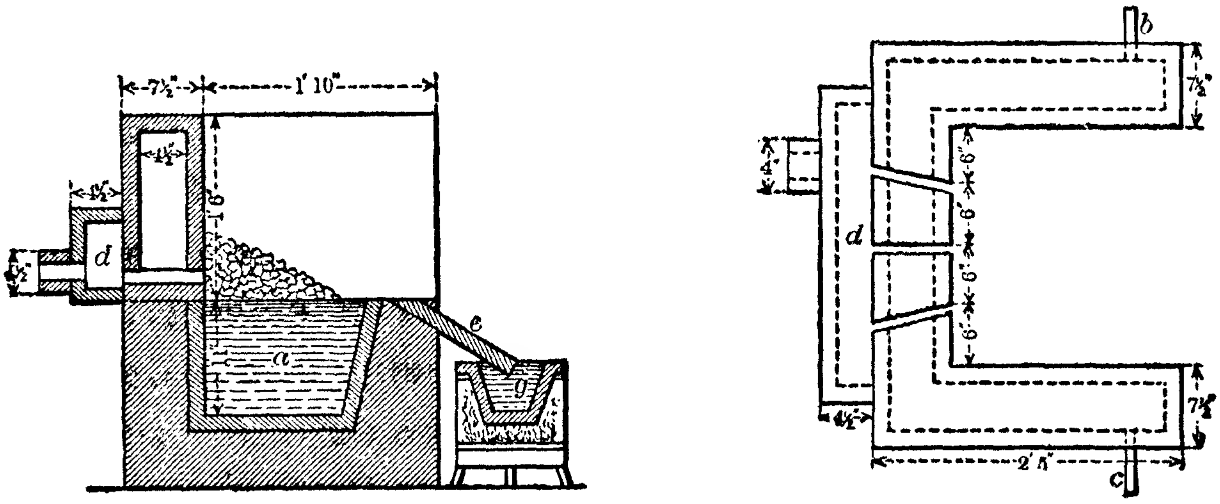

Fig. 7.—Section.

Fig. 8.—Plan.

Scotch Ore Hearth.

The hearth is first filled with lead, a small wood fire is started on the top of it, and charcoal piled above it, and the wind is turned on till the lead in the sump is fused, when 25 to 30 lbs. of galena, pulverized to the size of peas, is added; charcoal with some burnt lime is piled on top of it and covered with charcoal, and allowed to burn for four to five minutes, when the charge is stirred up with an iron rod, so as to bring the ore particles in contact with the charcoal.

This manipulation is repeated every time a charge is added, while the lead flows over the inclined plate into a kettle. Two smelters treat in an eight-hour shift 1,500 lbs. of ore, and the galena yields 68 per cent., which is less than would result in a reverberating furnace, as the slag is less fluid and retains more lead. This slag is smelted over again in a slag hearth. The production in 24 hours reaches 3,000 lbs.

The construction of the furnace is shown in Figs. 7 and 8. It consists of the sump, *a*, surrounded by an iron water-jacket, enclosed in masonry; *b* is the inlet, and *c* the outlet water pipe. The wind-pipe, *d*, is at the back, and the blast enters by three nozzles. The work-plate, *e*, is inclined, and over it the molten lead flows into the iron pot, *g*, which is heated separately. As shown, all parts are made of iron.

Mr. H. Pattinson gave an excellent account of the mode of working the furnace in the "Transactions" of the Natural History Society of Northumberland, Durham, and Newcastle-on-Tyne in 1831. Two men are employed, and a shift lasts eight hours. The fuel is coal and peat cut into prisms 9 in. to 12 in. long, and 2½ in. square. The agglomerated mass of ore, slag, and coke, left at the end of each shift, is called the *browse*, and the hearth, when in working order, should have the bottom nearly full of lead after the last shift.

The mode of working the furnace is as follows :—A small quantity of coal is spread on the lead in the hearth, which is then filled up with peat, well stacked up in front, while smaller pieces are thrown in behind. Some ignited peats are then placed before the nozzle, and the blast let on. When the fire has got up, more coal is added, and a little of the browse from the last shift is thrown behind the firestone. When the browse is worked in, lead begins to flow; the workman stirs up the contents of the hearth with a poker, throwing them forward away from the blast on the workstone. At this moment the nozzle is cleaned from any slag, and a peat placed in front of it to disperse the blast and keep open the fire. The workmen now put back the portions of the charge which have fallen on the workstone, and set up the contents of the hearth, so that the blast is well distributed, adding ore in small quantities where the fire seems hottest. Lead now flows freely. The stirring up of the charge is repeated at intervals to diffuse the blast, and each time a fresh peat is placed before the nozzle of the bellows. From the portions which fall out on to the workstone, lumps of grey slags are picked out and laid aside for subsequent treatment. The pieces of browse are broken up and returned to the hearth, after which fresh ore is added.

When the receiving pot is full of lead it is skimmed and ladled into pig moulds. Towards the end of the shift no fresh ore is added, but the browse is worked up alone; and at last, when the blast is stopped, it is taken out and separated from the grey slag, while some of the lead in the receiving pot is ladled back into the hearth bottom, so as to fill it for the next shift.

The process will be seen to be essentially an air-reduction process; the object being to oxidise the ore, and then to intermix with it fresh ore to obtain the reaction explained above. It will be noticed that the bed upon which the charge rests is fluid lead. The ores used to be dressed first and subjected to mechanical treatment before smelting, but it has been found advantageous to subject them to calcination, so as to remove a portion of the sulphur and to agglutinate the slimes, in order that they may resist the force of the blast without being carried up into the flues in the form of dust.

CHAPTER III.

SMELTING OF LEAD ORES IN BLAST FURNACES.

WHAT IS UNDERSTOOD BY SMELTING—Fluxes—Fusible Slags—Acid and Basic Slags—Proportions for producing Proper Slags—Fluxes in use—Fuel for Smelting—Mechanical Preparation of the Ores—Ore Beds—Ores adapted for Blast Furnaces—Influence of the Associated Minerals on the Smelting Operation—Treatment of Matte or Regulus—Character of Ores in the Western Mining Regions—Roasting-Smelting and the Iron Reduction Process.

What is Understood by Smelting.—By smelting is understood a conversion of solid mineral, or mineral and metallic masses, into the fluid state by means of heat and chemicals, and the subsequent separation of the metallic from the earthy ingredients by means of their specific gravity. Although (as already shown) there are many methods in vogue in Europe for utilising lead ores by smelting, there are only two which have found application, and justly claim attention, in distant mining regions, namely—(1) the English process of smelting in reverberatory furnaces; and (2) the blast furnace process.

The former has some marked advantages over the latter; for instance, the possibility of using raw fuel, its exemption from the necessity of using blowing engines, and the consequent saving of power; an easier control of manipulators, and the production of lead of better quality in which the precious metals are concentrated. Its general application, however, is greatly impaired by the fact that only comparatively pure ores can be treated successfully. Thus ores containing a considerable percentage of other metals besides lead—such as zinc, copper, antimony, &c., or more than 4 per cent. of silica *—are unfit for the reverberatory process. In the latter case, silicate of lead, which impedes the process of the operation and gives rise to the formation of rich residues, is formed; and in the former, there is, besides loss in rich residues, also a large one by volatilisation.

In England, the lead ores subjected to this process contain about 80 per cent. of lead, the gangue generally being carbonate of lime. The English process in its unaltered form can, therefore, only be recommended for pure galenas with calcareous gangue, an ore not often obtained in the Western mining districts. There was, however, to my knowledge, one establishment in operation where ores had been treated by this process, situate near Salt Lake City.

Compelled by the high price of labour, the heavy cost of transportation of materials and products, the lack of cheap mineral coal, &c., &c., the lead smelters in the Western mining regions of America and Australia have almost unanimously adopted the blast furnace process of smelting. By its means they are enabled to obtain a saleable product in the shortest possible time, and with the least expense; the residues in many cases being so poor that they can be thrown away.

Among the residues cannot be counted the matte and speiss produced in the blast furnaces. The more foreign sulphides in the ore, the larger the proportion of these two products; and the larger the percentage of iron which is required, and the more iron sulphide in the matte, the more silver the same will contain.

To insure success in smelting lead ores—as, indeed, with all other ores—it is necessary to know their mineralogical character, as well as the chemical properties of the gangue in which they occur. A perfect separation of the ore from the matrix by hand being impossible, and a concentration by water being, in most cases, likewise impossible, on account of insufficient supply and the expense connected with concentration, the gangue

---

* Authorities differ as to the amount of silica an ore may contain, and yet be fit for reverberatory smelting.

accompanying the ore must be converted into a fusible compound, termed *slag*.

Fluxes.—Quartz, we know, is infusible by itself, so is lime; but if we mix both in the proper proportions, and expose them to the necessary heat, the result will be a fusible compound. It has been found by actual experience that not the single compounds of silica and lime, or alumina, magnesia, &c., but double compounds of, say, silicate of lime and silicate of alumina, are the most fusible ones. Replacing one of these bases by alkalies, or the protoxides of the heavy metals—as, for instance, iron and manganese—we increase the fusibility of a slag within certain limits. The fusibility of a slag depends principally upon the proportion of silica to the bases contained in it. Mineral substances which serve to liquefy others not fusible by themselves are called *fluxes*. Under favourable circumstances an ore may contain all the slag-forming ingredients in the proper ratio, but only in a very few instances has nature graciously permitted such a coincidence—as, for example, in Eureka district, Nevada.

The best results will be obtained in a smelting operation when there is a possibility of obtaining different characters of ores. If these are mixed in such proportions as to produce a slag which will not only be easily fusible, but whose forming and smelting temperature will also correspond to the temperature which it is desirable to maintain in the fusion zone, or in the region of the tuyeres of the furnace, it will do away with the necessity of using raw fluxes which contain no metals, and whose smelting down costs just as much as if they contained metals.

When using different kinds of ores to flux one another, the proportions must be so arranged that the gangue of one kind of ore will flux the gangue of another kind.

Fusible Slags.—According to the ratio between silica and the bases, we discriminate four classes of fusible slags :—

(1) *Tri-silicates*, in which the silica contains three times the amount of oxygen present in the bases. As there is over 50 per

cent. of silica in such slags, they require too high a temperature for their formation to be thought of in lead smelting. (2) *Bi-silicates*, containing 50 per cent. of silicic acid and 50 per cent. bases, in which the amount of oxygen in the silica is twice as large as in the bases. (3) *Singulo-silicates*, with 30 per cent. silicic acid and 70 per cent. bases, the silica containing as much oxygen as the bases. (4) *Sub-silicates*, with 20 per cent. silicic acid and 80 per cent. bases, the amount of oxygen in the silica being less than that in the bases.

Acid and Basic Slags.—In the latter two the bases are predominant over the silicic acid, and they are termed, therefore, basic slags, while the first two are termed acid slags. Chemists have taken the trouble to establish complicated formulas derived from accurate analyses of various slags; but, as they are rarely constant compounds, these formulas have hardly any practical value for the metallurgist; he is content to know the percentage of silica and the quantity of the useful metal which he is endeavouring to obtain. An experienced smelter must be able to draw his conclusions from the appearance of his slag in both the fused and the solid states.

The most desirable slag for lead-smelting is the singulo-silicate, or a mixture of bi-silicate with the former, with protoxide of iron prevailing. The singulo-silicates run with a bright red colour, and solidify very quickly with turgescence. The bubbles, after bursting, frequently discharge blue gaseous flames.

These slags have a vitreous, metallic lustre, and a higher specific gravity than the bi-silicates, and are, therefore, more liable to entangle metallic particles. If lime and alumina are the prevalent bases, the heat required for their formation is much higher than in the case mentioned before. Such slags are generally pasty, run short, and form incoherent lumps. After solidification they have a honey-combed, stony, or pumice-stone-like appearance, greyish-green colour, and radiated, or lamellar crystalline texture. An earthy singulo-silicate is the least desirable slag for a lead smelter.

Bi-silicates require a higher temperature, and consequently involve a larger consumption of fuel for their formation than singulo-silicates. They flow slowly like syrup, solidify very gradually, without cracking or bursting, and are not liable to form accretions in the furnace, like basic slags. They appear vitreous after chilling, have a conchoidal fracture, and generally a black colour. Being saturated with silicic acid they corrode the furnace lining much less than basic slags. Their specific gravity is lower, and admits of a clean separation of metallic particles; but on the other hand they are apt to take up a large percentage of oxide of lead, and so cause a loss of metal.

Sub-silicates are entirely out of the question, as they are only detrimental. If protoxide of iron is their principal base, they run in a thin stream, like fluid litharge, congeal very quickly, and easily form accretions in the furnace bottom. Having a high specific gravity, they do not allow a clean separation from the metal. By their corrosive action on the lining, and their tendency to form accretions in the furnace, they shorten a campaign or run to a few days; hence their production must be avoided.

Proportions for producing Proper Slags.— One of the conditions essential in running a furnace successfully is not to produce a mixture which is too fusible, as it must be borne in mind that the reduction of the iron oxide (the flux used) to metallic iron only takes place at a high temperature near the smelting zone of the furnace, and when the iron is reduced to its metallic state, then only will it react on the lead sulphide and precipitate the lead. The smelting mixture, therefore, must be so composed as not to produce too fluid a slag, through which the undecomposed minerals when arriving at the smelting zone would pass too quickly, so that time would not be given for their complete reduction.

As already stated, the production of a bi-silicate slag is the most advantageous. But in cases where the ores are of a clayey nature, and also when they contain much zinc oxide, it will be found necessary to produce a singulo-silicate or easily fusible slag, as such compounds are not easily fusible, and the principal base of such slags is ferrous oxide.

The proportion of iron ores to be used—which ores in practice are always or mostly in the oxidised form—is calculated from the quantity of lead sulphides they have to decompose, and the quantity required to form the slag which should contain the proper proportion of silicate of iron and lime. According to the following formula it will be seen that 1 part of iron separates 3·7 parts lead :—

$$\begin{array}{ccccccc} PbS & + & Fe & = & FeS & + & Pb. \\ (207 + 32) & + & 56 & = & (56 + 32) & + & 207, \end{array}$$

or 56 iron reduces 207 parts lead.

If oxidised copper ores are present, the quantity of iron flux can be reduced owing to the affinity of copper for sulphur. A cupriferous matte is thereby produced, the copper assisting in the reduction of the galena.

In case arsenical pyrites are present the iron flux has to be increased, as arsenic has a great affinity for iron, and this causes a decomposition of the arsenical sulphides, but the liberated sulphur also combines with the excess of iron, producing speiss.

As will be shown, lime is a most valuable flux, and also a reducing agent for the lead sulphides, but cannot be employed alone without iron, for the reason that the silicate of lime alone forms a difficult fusible slag. For this reason it is necessary to produce a slag composed of silicate of iron and lime, with a preponderance of the former; and it must also be considered that during the smelting operation a certain proportion of sulphate of lime is produced, as is shown by the following equation :

$$4\ PbS + 4\ CaO = CaSO_4 + 3\ CaS + 4\ Pb.$$

Bi-silicate or higher silicate slags can be produced in the absence of zinc or clay in the ores, and a large portion of the iron flux can be replaced by lime; but in producing the higher silicated slags iron will render them specifically lighter than lime, and a more complete separation, therefore, is effected.

The presence of iron flux is always beneficial, as it imparts fluidity to the slag and acts as a decomposing agent on the lead sulphide and silicate.

Fluxes in use.—As fluxes the following substances are used:—

(1) Acid slags, for their capability to take up bases, and as solvent agents.

(2) Basic slags, for their capability of saturating themselves with silicic acid and as diluting agents.

(3) Iron-stone is a very efficient agent to slag silicic acid, *i.e.* quartz. Being reduced in the furnace to protoxide of iron, which has a strong affinity for silicic acid, an easily fusible slag is formed. The best quality is hematite or magnetite. Hydrated iron ores are too easily reduced to metallic iron, and ought to be burned before use. If free from quartz and slag they may be thrown into the furnace in pieces of fist-size. Iron ores are also used as desulphurising agents.

(4) Soda is even better than the above as a solving agent for quartz, but it can only be had at reasonable rates in a few localities.

(5) Lime, as a partial substitute for iron-stone in solving quartz. It is best used in pieces of pigeon-egg size. From the theoretical standpoint burnt lime would be the best form, but as this is generally in a very fine state, it will partially be blown out at the top of the furnace, or roll through the interstices of coal and ore, and thus be prevented from uniting with the silica in the desired proportion. Lime cannot be used by itself as a slagging agent for quartz. Lime-slag is smeary, not very liquid, and deranges the furnace very easily by clogging. The metal separates only imperfectly from it, which is the reason that so much metallic lead is wasted by being thrown aside with the slag in some of the limestone districts. Of course, dolomite, the carbonate of lime and magnesia, is included in this head.

(6) Clay is only used on a very small scale as a partial substitute for lime. It must be applied very cautiously, as it often reaches the bottom of the furnace in the shape

of dry, incandescent lumps, which stick to the walls and hearth.

(7) Quartz, in the form of coarse sand. It is used to furnish the acid for the slag in cases where the gangue of the ores is basic.

In addition to the fluxes enumerated above, some metallic products which are occasionally used for various purposes should be mentioned:

(1) Iron—in the shape of tin scraps, pieces of wrought iron, cast-iron, &c.—is used to decompose galena, thereby forming sulphuret of iron (iron matte) and metallic lead. Owing to the high price of iron in the Western mining districts it is either replaced by the less efficient iron-stone, or rendered unnecessary by a previous roasting of the ores.

(2) Litharge is added to poor lead ores at some of the works in the Western mining districts, with the view of preventing the precious metals from being carried into the iron matte. Owing, however, to the heavy expense of cupelling, this practice is rarely carried out.

(3) Cinders—*i.e.* semi-fused matter from previous smeltings—to extract the metals.

When smelting galenas in cupola furnaces an element must be introduced which precipitates the lead from its sulphide combination, and there must be a base sufficiently strong to prevent the scorification of the liberated lead. In practice, pure galenas are never submitted to a precipitation smelting direct, but the method pursued is a preliminary roasting followed by a reducing smelting, which is completed by a precipitation smelting. Such an ore, with a siliceous gangue, when roasted in heaps, will give a mixture of oxides, sulphates, and silicates of lead. There will remain a certain proportion of unroasted galena.

With such a product, were it not for the portion of unroasted galena, the reduction smelting in the cupola would be sufficient whereby a certain amount of lead would be scorified into the slags, and an amount of matte would be formed proportionate to the sulphur remaining in the ore. Enough iron, therefore, has to be introduced into the charge to precipitate the lead which is in combination with the sulphur, and if enough limestone is added to saturate the quartz and to produce a basic slag, the scorification of the lead is prevented, with the result that nearly all the lead will be obtained as lead bullion and very little matte will be formed.

When we have to deal with a complex mineral, like an argentiferous lead and copper ore, the smelter will take care not to introduce the full charge or an excess of iron, as his object must be not to desulphurise the minerals completely by means of his iron flux, but, on the contrary, he must try and produce a certain amount of matte, which will absorb all the copper, and only precipitate his lead as bullion. He will have to introduce less iron than theoretically calculated, and thereby avoid the complete saturation of the sulphur by iron, but leave sulphur enough in the charge to combine with the copper. Such combinations I have noticed in the Transvaal, only with the difference that they carry a basic gangue, chiefly of carbonate of iron, and if they should be treated in cupolas they would require an addition of siliceous material for their fluxing. But up to the present (March, 1891) no works have been erected for their reduction.

Fuel for Smelting.—The only fuel which could be obtained by lead smelters during the earlier periods of metallurgical operations was charcoal, and this was procurable only at high prices. The charcoal is chiefly burned from cedar, spruce, pine, quaking aspen, mountain mahogany, and nut pine wood. Nut pine coal is considered the best.

The coal burners make their pits of various sizes, according to circumstances. A pit of 100 cords of green wood burns out in about fifteen or twenty days, and yields from 2,500 to 3,500 bushels of charcoal. As one ton of good, hard coke approximately produces the same effect as 200 bushels of charcoal, it is better to use it where it can be obtained. But the blast engines used must give a sufficient pressure for a perfect combustion of coke.

In the valley of the Arkansas, says Mr. Guyard,* there are several establishments each provided with nine or eleven beehive shaped kilns, erected especially for the purpose of supplying the smelters with charcoal. These kilns are beehive-shaped, as shown in Figs. 9 and 10, and are made of fire-brick, cemented with lime and sand mortar, each kiln being made of

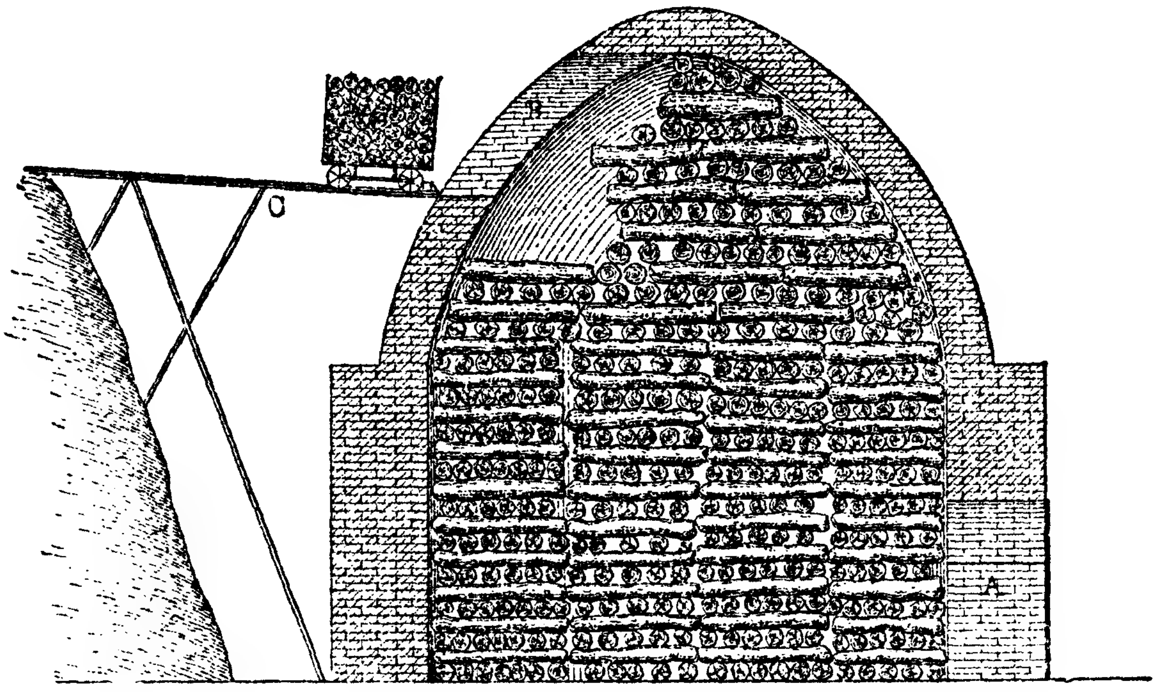

Fig. 9.—Section on ρ δ.

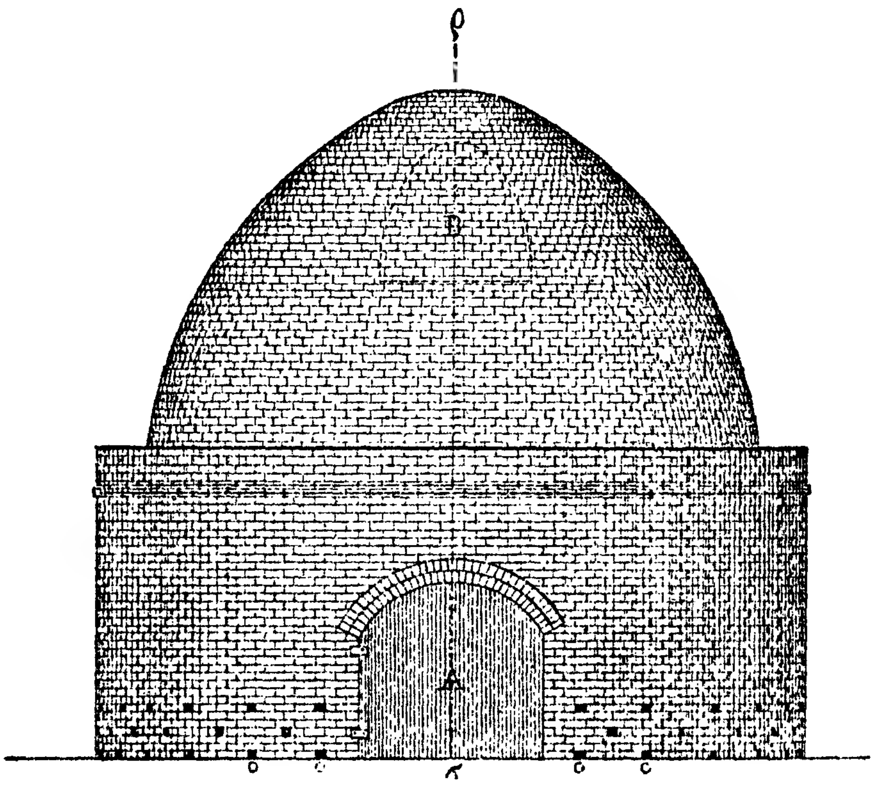

Fig. 10.—Elevation.

Charcoal Kiln.—Scale, 1" = 12 Feet.

---

* "Geology and Mining Industry of Leadville."

18,000 bricks. The greatest diameter is 22 feet, the height 21 feet. In front of the kiln is a charging and discharging opening, A, 5 feet 5 inches high and 5 feet wide, closed by a sheet-iron door, and at the back and upper part of the kiln is a feed-hole or door, B, similarly closed, 4½ feet high and the same in width. This feed-hole is placed at a height of 16 feet from the ground. It is connected by a tramway, running over a bridge, with the wood stacks on the upper part of the bank of the gulch. At the base of the kiln are three rows of apertures, 3 inches by 4 inches, and 2 feet apart. The rows are 1 foot apart and contain from 22 to 25 apertures. These holes may be closed at will with bricks and clay.

The pine wood, already cut in lengths of four feet, is first piled through the lower opening, A (large stacks of wood stand on this level), and afterwards through the upper door, B, and in this way the kiln is completely filled. Both doors being left open to create a draught, a charcoal and dry wood fire is kindled at the door, A. Both doors are then closed and hermetically sealed with clay, and the combustion is regulated by means of the apertures O, which are left open or are closed according to the intensity or direction of the wind. The air enters at the lower row and the smoke escapes at the upper.

For the complete transformation of wood into charcoal in these kilns from four to eight days are required, according to whether the wood is dry or green. Dry wood produces a greater percentage of charcoal, and of better quality, than green wood. When the combustion is completed all the apertures are hermetically sealed by means of bricks and clay, and the kiln is allowed to cool thoroughly. The cooling requires about four days.

Each kiln holds from 25 to 27 cords of wood, or about 3,350 cubic feet; one cord of wood produces about 50 bushels of charcoal. In consequence, each kiln yields on an average 1,300 bushels of charcoal in 10 days. During each operation about two gallons of creosote tar runs out at the lower part of the ground door, but no use is made of it. The charcoal made in this way is of excellent quality and gives great satisfaction. The weight of one bushel of charcoal is about 14 pounds, consequently there are about 142½ bushels of charcoal to the ton. It takes from 30 to 40 bushels of charcoal to smelt one ton of ore, or 420 to 560 lbs. for 2,000 lbs. of ore. Mixtures of coke and charcoal in various proportions are also employed.

Since the construction of railways and the discovery of good coking coal in some of the mining regions, charcoal is not so extensively used as it was formerly. English coke is also imported for this purpose.

Good Colorado coke can now be obtained in some districts at from £2 10s. to £4 per ton. One ton of such coke will smelt about six tons of ore and fluxes. It is the practice to count only five tons of smelting charge to one ton of coke, owing to the loss which takes place in the transportation and handling of it, which can be estimated at 15 per cent.

If English coke is used, the proportion of smelting charge is generally taken at seven tons to one ton. The greater hardness of the English coke will also diminish the waste, and in practical working it will be found that it takes one ton to six and a half tons of smelting charge, or between 15 to 16 per cent. of the weight of the smelting charge.

Mechanical Preparation of the Ores.—Before smelting, the ores must be reduced to the proper size. Some ores yielding a lightly basic slag may be thrown into the furnace in lumps the size of a fist, without disturbing the smelting operations; but siliceous ores ought to be reduced in a rock breaker. Unless this is done no furnace can be run without sledge and bar.

Ores carrying much oxide of iron, should be agglomerated in conjunction with quartz in a reverberatory furnace. Hereby the oxide of iron is slagged, and cannot be so easily reduced to metallic iron by subsequent smelting in a blast furnace. Metallic iron, not finding heat enough in a lead furnace to keep it sufficiently fluid to run out with the slag, congeals in the hearth, and forms what smelters term "sows," "bears," "horses," or "salamanders."

Very fine ores and flue dust ought to be agglutinated by milk of lime, or agglomerated in a reverberatory, as they either escape from the top of the furnace or roll through the charge and arrive raw before the tuyeres, clogging and deranging the furnace.

The furnace charges are prepared on the floor in front of the charge opening, or above the automatic charging apparatus, if such a one is employed. It is usual to prepare the mixtures according to weight; but after a little practice the workmen attain to such dexterity that they will take a shovel full of this or that material and modify the charges, and regulate the running of the furnace with the required weight of materials, without the assistance of balances or measures. The fuel, whether charcoal or coke, will be measured by the scoopful.

In this case each kind of ore and flux is kept separate in different bins, and is weighed or measured by itself and charged into the furnace in separate horizontal layers, alternating the fuel and charge.

Ore Beds.—In some cases ores need not be mixed with fluxes to effect the necessary chemical reactions during fusion, as they contain in themselves all the necessary ingredients which insure the precipitation of the metal and the conversion of the gangue into slags, with the production at the same time of varying proportions of matte and speiss. Such instances, however, are exceptional, and usually smelting charges, consisting of mixtures of ore with fluxes and fuel in definite and somewhat varying proportions previously determined, have to be prepared beforehand, so as to produce the desired chemical combination. The preparation of this mixture is called out West an "ore bed."

Ore beds are prepared by superposing layers of different ores of known weight and composition in such proportion as to produce mixtures of known contents in lead, silver, iron, and silica. They are generally made to contain equal parts of metallic iron, metallic lead, and silica or gangue, or from 20 to 25 per cent. of each. The smelter will, therefore, ascertain—if he has an ore bed containing, say, 100 tons of mixture—

(1) The percentage of silica or gangue the ore bed contains, and the total weight in tons of the silica present; (2) the percentage and weight of iron in the ore bed; (3) the percentage and weight of lead in the bed; and (4) how many ounces silver (or gold if any) per ton ore and total silver are to be found in the ore bed.

At some of the smelting works in Leadville, Colorado, the ore beds are made to contain equal parts of gangue and metallic iron, 20 to 25 per cent. of each, and from 16 to 25 per cent. of lead. When the proportion of gangue and iron is equal in the ore bed, the ore is mixed with 10 per cent. of dolomite; but when gangue is in excess hematite is added in sufficient quantity to make the balance.*

Ores adapted for Blast Furnaces.—The ores which are best adapted for this process are ores with an earthy gangue, and not containing too large a percentage of foreign sulphides. It is obvious that the more foreign sulphides are present in the ore the more iron will have to be added so as to get rid of the sulphur, which will result in a large production of matte; and as this will contain a large amount of iron sulphide, the result will be that a considerable amount of silver will be carried into the matte, owing to the affinity of silver for iron sulphide.

The presence of copper sulphides is not so deleterious, as the copper becomes concentrated in the matte, from which it may be regained by separate treatment, together with the silver. Copper does not require the same quantity of iron for its reduction as iron sulphides. If iron furnaces are near at hand, and iron furnace slags can be obtained, they can be profitably employed, as the iron contained in these slags becomes reduced, and acts then as a precipitant for the lead.

---

* In the Appendix (*post*, pp. 333—389) will be found a number of reports on smelting operations in various districts, in which examples are given of the proportions of ores and fluxes employed with ores of different character.

The object of the smelter is mainly directed towards the production of a nicely fusible slag, and the earthy materials produce a light slag which separates easily from the matte; and when earthy silicates exist in the ores, the addition of the iron ore fluxes or iron slags exert a solvent action on the ore.

The reaction of the iron slag (if a sub-silicate) in the furnace is expressed as follows:—

$$Fe_4\,SiO_6 + 2PbS + 2\,C = Fe_2\,SiO_4 + 2\,Pb + 2\,FeS + 2\,CO.$$

In treating a more siliceous ore, when some lime is added besides the iron flux, the reaction can be expressed as follows:—

$$2\,(Fe_2\,SiO_4) + 2\,PbS + 2\,CaO + 2\,C = (Ca_2\,SiO_4 + Fe_2\,SiO_4) + FeS + 2\,Pb + 2\,CO.$$

Some ores may contain too little lead to be adapted for smelting. How low this percentage of lead can sink and still make the smelting profitable is hard to say; but from my own observation in America, I should not think there are many mines which smelt ores under 12 per cent. of lead in the smelting mixture.

Influence of the Associated Minerals on the Smelting Operation.—*Sulphurets of Iron.*—When iron pyrites are present in the smelting mixture, the formation of a large percentage of matte is necessarily facilitated, and to facilitate their decomposition metallic iron scraps or oxidised iron ores ought to be added, and the resulting matte always contain silver.

The presence of a considerable quantity of iron pyrites in galena ores will render the same unfit for smelting in reverberatory furnaces owing to the formation of matte, which will cover the reduced lead and interfere with the progress of the reaction.

Arsenical Pyrites and Sulphides of Antimony cause volatilisation of lead and silver, and arsenic combining with iron forms the compound called speiss, which also retains silver, lead, and other metals if present in the ore. The sulphides of antimony are to a certain extent reduced during the smelting, and metallic antimony will enter into combination with the metallic lead, producing an article called hard lead, which has to be refined. Some sulphide of antimony will enter into the combination with the speiss. They are not desirable metals in a smelting mixture.

Sulphide of Zinc, or Zinc Blende, causes great volatilisation of silver and lead. It produces a slag not easily fused, and its decomposition by iron requires a high temperature, and therefore increased consumption of fuel. It is considered by smelters a very obnoxious substance in ores.

Zinc blende will form an incrustration inside the furnace, and with water-jacket furnaces gives great trouble and must be removed from time to time with the bar. This necessitates the charge being fed down as low as possible; and when this is done, to give an extra charge of fuel and drop the crust on top of it. If the blende accretions are too large, it is best to remove them from the furnace.

Copper Pyrites, as they are easily decomposed by iron, will be either collected in the matte, or partially precipitated with the metallic lead. The matte has to be treated for the copper and silver by special processes; and the lead is liquated from the copper, if present in sufficiently large proportion, by liquation in reverberatory furnaces.

Carbonate of Iron.—Dr. Percy * says in regard to this substance—"When it is heated to redness both carbonic oxide and carbonic acid are evolved, and the residue consists of protoxide and sesquioxide of iron, in the ratio of $FeO. Fe_2O_3$; but during calcination much of this protoxide may be converted into sesquioxide by atmospheric oxygen. According to Kerl, experiments, made at Clausthal on the smelting of galena in the reverberatory furnace, have shown that spathic iron ore, in the presence of silica, may act injuriously, by giving rise to the formation of easily fusible silicate of iron; but when not present in too large proportion it may be beneficial in the subsequent reactions, rather than hurtful. Kerl alleges that in smelting in the reverberatory furnaces, the presence of sesqui-

---

* "Metallurgy of Lead."

oxide of iron necessitates more frequent repetition of what he designates the 'roast reduction process,' and that sesquioxide of iron, when present in large quantity, hinders the reactions in the melting down stage by lessening the contact between the constituents of the mass. In the blast furnace, carbonate of iron will be reduced to a greater or less extent, and the resulting metallic iron may then act as a desulphurising substance; and with a view to this action, a certain proportion of it may designedly be left in the ore in the operations of dressing."

Fluor Spar.—Dr. Percy says that this substance, which is often associated with galena, may be regarded as chemically inert, except when sulphate of baryta is also present; in which case it may serve as a flux to the latter when in smelting it is desired to produce liquid slag. It also forms readily fusible compounds with sulphate of lead. The sulphuric acid which is evolved from the sulphate of lead acts upon the fluoride of calcium in the slags, and disengages fluorine in some state of combination or other.

Clay.—Silicate of Alumina.—On this subject he remarks:—"The term clay is far from definite in meaning, as it is applied to substances differing much from each other in composition and other respects. All clay usually contains free silica (and its action is explained in the smelting reactions); but what would be the precise effect of a silicate of alumina unmixed with free silica, I cannot positively assert."

Considerable light is thrown on the question by Mr. Carl Henrich in an article on "Aluminate Slags,"* which settles the doubtful points regarding this element in smelting. "Generally (he says) in smelting copper ores or lead ores in the blast furnace, alumina does not enter the slag in sufficient quantity to make the question an important one, whether it plays the rôle of a base in the composition of the slag, combining with the silica of the charge, or if it plays the rôle of an acid combining with the undoubted bases of the charge, as the protoxide of iron and manganese and the oxides of calcium,

---

* See "Engineering and Mining Journal," December 27th, 1890.

magnesium, barium, sodium, and potassium. Sometimes, however, the smelter is called upon to consider this question in the calculation of the composition of his charges, when the gangue rock of his ores carries an unusually large amount of alumina, as, for instance, if the ores occur in decomposed basic feldspathic rocks or in decomposed olivine or serpentine rocks.

"I had the good (or bad) fortune once to have to deal with a very exaggerated case of this kind in smelting the decomposed serpentine gangue rock of copper pyrites in New Zealand, when under adverse circumstances in regard to available fluxes the percentage of alumina in some of my slags ran actually higher than the percentage of silica. By using silica or very siliceous rock as portion of my flux I might have attempted to make a slag approaching in its composition an iron blast furnace slag or a Mansfield copper slag. But the construction of the furnace which I was compelled to use made even the thought of such a slag composition illusionary. The furnace was one of the Arizona black copper cupola types; consisting of a slightly conical shaft inverted, and about seven feet high from the centre of the tuyeres to the charge door. It is, of course, impossible in such a low furnace to get a blast pressure much above 12 to 14 ounces per square inch. This, of course, necessitates the making of an easier smelting slag than would be required in a higher furnace, allowing a stronger blast pressure to be used. I have lately had another opportunity of studying by practical tests the behaviour of alumina in the formation of slags, although not in quite so pronounced a case as during my New Zealand smelting experience.

"The ores of that portion of Sonora where I am at present engaged in smelting occur mostly in segregated veins of the eruptive rocks, said country rocks forming frequently a large portion of the gangue of the veins in a decomposed state, which leaves the silica and alumina as the main constituents of this gangue.

"The best flux available is a carbonate of iron and lime, which, on account of its contents in both these bases, determines the relative quantities of iron and lime in the slag produced.

"Taking all conditions into consideration, the best slag which I have been able to produce so far has been of the following composition:—

Silica	35	per cent.
Alumina	13·3	" "
Protoxide of iron	37·2	" "
Lime	14·5	" "
	100·0	" "

This corresponds very closely to the formula—

$$(8\ FeO + 4\ CaO + 2\ Al_2O_3)\ 9\ SiO_2,$$

which may be considered either as a singulo-silicate, with the oxygen ratio 18 : 18 or 1 : 1, or as a bisilico-aluminate—

$$(8\ FeO + 4\ CaO)\ (2\ Al_2O_3 + 9\ SiO_2)$$

of the oxygen ratio 12 : 24 or 1 : 2.

"I am aware that usually it would be regarded as the former combination, and, standing by itself, there would really be no reason to doubt the correctness of this view. Some observed facts, however, in the behaviour of this type of slag, when it is made slightly more basic or acid, have led me to the conclusion that the bi-silicate-aluminate view of its composition is the correct one, *i.e.* that the alumina in this slag must be considered as an acid and not as a base.

"While smelting with this slag I was compelled by temporary conditions to economise as much as possible with the above-mentioned iron lime carbonate as a flux. Considering the above normal slag as a mono-silicate, and the alumina as a base, a slight increase in its activity, or a slight decrease in the lime and iron percentage of the slag, should make very little difference in its fusibility, and would allow of a saving in flux.

"An attempt in that direction resulted in a slag corresponding very closely to the formula—

$$6\ FeO + 3\ CaO + 2\ Al_2O_3 + 9\ SiO_2;$$

the analysis being—

38·3 silica, 14·6 alumina, 11·3 CaO, 0·1 MgO, 32·4 FeO, total 97·2 per cent.

This slag proved hard to melt, thick flowing, and inclined to scaffolding, showing unmistakable signs of the thick consistency of molasses candy or shoemakers' wax; or rather the slag showed all tendencies to assume these characteristics on any further slight increase in its acidity. If we consider the oxygen ratio of the slag, we find, on the assumption of alumina as a base, the ratio of the basic oxygen to the acid oxygen to be 15 : 18, which with any other base, as lime or magnesia, substituted for alumina, will make a good slag, which would have worked all right in the furnace. On regarding alumina, however, as an acid the oxygen ratio changes to 9 basic oxygen to 24 acid oxygen, or near a ter-silicate-aluminate, which is of course too hard melting a slag for the kind of fuel at my command and available blast pressure.

"By increasing the amount of flux so as to produce a slag (with alumina as a base) so that the oxygen ratio was 21 basic to 18 acid, the same showed a decidedly easier melting character than the slag regularly produced during the run. In regarding the alumina as an acid we have in this slag an oxygen ratio of 15 to 24, or about 2 : 3, or to the composition of a sesqui-silicate-aluminate, which may be regarded as the best working slag of low lead or copper blast furnaces, when highly aluminous slags have to be produced.

"While as a rule alumina does not play an important part in lead and copper slags, still when it occurs in somewhat larger amounts in the ores to be smelted, I have found it at least desirable and even important to be sure whether to regard it as a base or an acid in such slags, and I unhesitatingly count it as an acid."

Barytas.—As to the gangue or earthy associates, their influence is fully discussed in the individual examples given further on. Special attention should be paid by the smelter if sulphate of baryta occurs with his ores. This substance has a high specific gravity, and when fused in the presence of iron is apt to form a combination consisting of sulphide of iron and sulphide of barium, not quite so heavy as matte, which will not quite separate from the slag, and is apt to hold entangled other metals, thereby causing sometimes heavy losses. Such ores require a large addition of iron.

$$4\,SiO_2 + BaSo_4 + 8Fe = (BaS + FeS) + (Fe_7BaSi_4O_{16}).$$

Under the name of *skumnas*, such slags, composed of silicate of iron and baryta, are produced in some lead mines in Sweden.

Treatment of Matte or Regulus.—As I have already mentioned, it is customary in the mining regions of the United States for the matte, after a preliminary roasting, to be simply added to the smelting mixture and passed through the cupola, where it acts as a flux through the iron it contains. It is otherwise in Europe, where the matte treatment forms a separate branch in several of the metallurgical works where lead ores are smelted.

In the Upper Hartz the matte is roasted in heaps of 75 to 150 tons.* After two to four weeks the heaps are burned out, when they are turned over and the unroasted lumps picked out. When sufficient raw matte is picked out the same is burned in a separate pile, or mixed up with fresh matte for a new pile. The larger the proportion of sulphide of iron present, the easier and quicker is the roasting operation. Care should in every case be taken to prevent the temperature rising so high as to agglutinate the lumps together in firm masses.

The smelting of the roasted lead regulus is effected in low blast furnaces, with coke, or coke and coal. The composition of the smelting mixture varies at the different works in the Upper Hartz. Siliceous slags are added so as to absorb the iron of the roasted regulus, and furnace products rich in lead are usually added. At the Altenau works, limestone is used instead of iron, and serves probably to facilitate the reduction of metallic iron from the slags added by its action as a powerful base to the silica of those slags.

---

* See Kerl.

The operations may be divided as follows:—(1) the above described operation of roasting and smelting for a second matte; (2) roasting and smelting of the second matte, when a third matte is produced; (3) roasting and smelting of the third matte, when a fourth matte is produced.

What copper may exist in the previous matte is concentrated in the fourth matte, and the copper and silver are separated by processes which I have described elsewhere.* The degree of roasting will influence the number of subsequent fusions, of which generally four will suffice to extract the lead and silver, and produce a final regulus containing copper suitably concentrated. The result might be hastened by roasting more strongly and adding more metallic iron; but great loss of copper, it is maintained, would then occur from the metal passing into the slag, and lead rich in copper would be obtained, accompanied with copper regulus richer in silver, because the extraction of the silver does not take place proportionately to that of the lead on account of the presence of sulphide of iron, with which sulphide of silver has a strong tendency to combine.

Character of Ores in the Western Mining Regions.—The ores are in nearly all cases a preponderating mass of oxidised lead ores, such as cerussite, anglesite, and leadhillite, in which nests and nodules of undecomposed galena occur. Associated with these are, in some cases, arseniate of iron and arsenical pyrites, hydrated oxide of iron, quartz, and calcareous clay, iron oxide, and in some cases a combination of antimony; also dolomite and quartz in widely varying proportions. In Bingham Cañon, Utah, only quartz and comparatively little oxide of iron, or iron sulphurets; in Cerro Gardo, California, oxide of iron, iron pyrites, antimonial compounds, copper ores, and, as gangue, carbonate of lime and quartz. In Argenta, Montana, occur (besides the above-named lead ores) pyromorphite, and molybdate of lead. The preponderating gangue of

---

* "Metallurgy of Gold" (3rd edition), p. 403.

the Argenta ores is quartz, and there is here a larger proportion of galena than elsewhere in the West.

In most of the localities named the lead ores themselves contain sufficient silver to render its separation from the ore the main object of the smelting; but in some districts the lead ores serve only to furnish the extracting agent for the silver of the true quartzose silver ores, which, at the same time, contain a sufficient percentage of lead to make amalgamation impracticable. They are, therefore, beneficiated by smelting, although the lead itself at one time had no market value.

The mines of Wood River and Yankee Fork in Idaho, the Coso, Modoc Mines in Inyo County, California, the Lead Hill Mines of Colorado, all carry large quantities of oxidised ores, the upper workings, of course, showing in all cases a preponderance of the oxidised over the sulphuretted; and the former are generally designated out West by the name of carbonates.

In many cases remarkably fine smelting materials have been encountered; and mines yielding very large quantities of very ferruginous oxidised lead ores, with admixture of galena ores, have allowed of profitable smelting, without the use of many fluxes.

The ores of Leadville,* composed chiefly of carbonate of lead or cerussite, and of galena or sulphuret of lead, are divided into two great classes—the hard carbonates or lumps, and the sand or soft carbonates; and each class is subdivided and designated according to the assay contents and value. In these ores silver exists chiefly in the state of chloride and of chloro-bromo-iodide.

Some of the constituents of the ores have been found in an isolated state; pyromorphite, or chloro-phosphate of lead and sulfenite, or molybdate of lead, in one of the mines. Anglesite, or sulphate of lead is found in most mines. Silicate of lead occurs in small reddish crystals. Cerargyrite, or chloride of silver; embolite, or chloro-bromide of silver; shapbachite, or sulphuret of bismuth, lead, and silver; and bismuthiferous

---

* A. Guyard, "Mining Industry of Leadville, Colorado."

lanarkite, or sulphato-carbonate of lead and bismuth, are also found.

The Horn Silver Mine of Frisco, Utah, carries a variety of ores, from low-grade galenas to high-grade milling-ores, which by judicious mixing and the addition of some iron ores, are all passed through the smelter. When I visited this mine in 1879, the explorations had then opened a solid ore body 200 ft. in depth, 500 in length, and over 100 wide, and it was the only mine which had ever come under my observation which had no waste dump, as the shaft was commenced from the grass roots in ore, and every inch of exploratory work—amounting to several thousand feet of tunnelling and cross-cutting—was all in solid *pay* ore.

According to the quantity and quality of the gangue the following classification may be established:—

(1) Ores containing all the slag-forming ingredients (oxide of iron, silica, lime) in the proper proportions, or *neutral* ores.

(2) Basic ores, with lime and oxide of iron or manganese, and no silica, or not in sufficient quantities.

(3) Acid or hard ores, with silica or clay prevailing.

Provided the slag-forming ingredients alone be present, galena ores, when passed through a blast furnace, do not yield metallic lead at once, but a mixture of metallic lead with sulphuret of lead (*lead-regulus, matte*) and other sulphurets, if such be present. In order to produce metallic lead, galenas may be smelted with an addition of metallic iron (5 per cent. or more, according to circumstances), or after roasting in heaps, stalls, or kilns.

In the first case the iron unites with the sulphur of the galena to form a sulphuret of iron, called iron-matte, and metallic lead is set free. This reaction is, however, not complete, as a considerable quantity of sulphuret of lead, and with it silver, is retained by the iron matte, necessitating another roasting and smelting operation. The iron matte, being lighter than the lead, floats on the top of the lattter, and thus can be easily separated from it after cooling.

In the course of the following chapters it will be seen that at several establishments the matte, after preliminary roasting in heaps, is made use of as a valuable flux, thus effecting a great economy.

As there is more or less sulphur or arsenic present in many ores, none of which are submitted to a thorough preparatory roasting, the formation of matte or speiss, or a mixture of both, is of course unavoidable; and as silver has not only great affinity for lead, but also for sulphur; much of this metal goes with the matte. The latter must be roasted before adding it to a subsequent charge, will have to pass through the furnace before giving up its silver, as very little of its sulphur is driven off in the upper parts of the blast furnace at each smelting if added in the raw state.

In the early days of metallurgical operations out West twenty years ago, the matte, or speiss, was considered as a waste product, and was termed "white iron," and although containing an appreciable proportion of precious metals was unhesitatingly thrown into the waste heaps. The introduction of the Probert process, which will be described in a succeeding chapter, now permits of an economical treatment of these products.

Roasting-Smelting and the Iron Reduction Process.— The combined roasting and smelting process is preferable to the iron reduction process, especially with the heavy galena ores containing only a small percentage of oxidised products, when a preliminary roast is imperative. The galena is first roasted in heaps, stalls, or reverberatory furnaces. Roasting in heaps and stalls is cheaper, as the ore may be used in lumps, and no expensive apparatus is required; but it is more tedious and incomplete, and only suited for galenas containing a large percentage of sulphurets of iron or copper. The latter prevent the ore from smelting together, and so stopping the roasting process, and their sulphur furnishes the necessary fuel. The roasting in reverberatories is by all means the best preparation of galena ores for smelting.

The preliminary roasting in reverberatories is not much practised out West, but the ore is usually subjected, as it comes from the mines, to the reduction and precipitation process in blast furnaces.

This system is also employed at the Clausthal works in Saxony, where the ores are not roasted, but are precipitated by fusion with iron which combines with the sulphur. They employ iron oxide resulting from the treatment by a wet process of poor copper ores. The ores they treat are comparatively clean, and contain very little antimony, arsenic, or zinc. The large percentage of sulphur contained in the smelting mixture causes a matting of the copper in the ore, and prevents the lead from being slagged as a silicate, but it also partly enters as a sulphide into the composition of the matte.

If galenas contain copper ores, and these are roasted previous to smelting, their oxidised condition then will favour their reduction and scorification during smelting, and lead bullion will be obtained containing copper and slags which will be rich in copper and lead.

The results at Clausthal show that the lead is comparatively pure, that the slags contain very little lead or copper, as the latter has become concentrated in the matte owing to its affinity for sulphur.

The reasons why the reduction and precipitation process is preferred to a roasting reduction and precipitation process are the high prices of labour and materials, and the preponderance of oxidised ores over sulphurets, though in some cases the latter are quite abundant.

The marketable product which the smelting works produce is argentiferous lead, with the exception of some works which cupel the lead and ship the silver only. As a general rule it pays best in the mining districts to produce argentiferous lead bars or crude bullion, the contents of which in silver and gold vary in value from £12 to £100 per ton in the different districts. The main reason for not cupelling the lead in the West is found in the increased cost; and accordingly the separation of the silver and lead, and the refining of the latter, are accomplished at much less cost in the Eastern centres of trade.

There are, of course, exceptions, as in cases where the smelting works were located during the earlier periods of metallurgical operations so far from the railroad, that the price obtained for the lead would not even cover the cost of smelting and freight, and where only the silver therefore would be shipped, the lead remaining in the furnace-yard in the form of litharge. Part of this would be used over again in smelting such silver ores as were naturally too poor in lead, but the greater portion will have to await cheaper modes of reduction and access to railroads.

CHAPTER IV.

CONSTRUCTION OF THE BLAST FURNACE.

ADVANTAGES OF THE BLAST FURNACE—Cupolas—Crucible Furnaces—The Sump Furnace—Spurofen—Early German Cupola Furnaces—Early Forms of Furnaces on the Pacific Coast—The Rachette Furnace—The Piltz Furnace—Improvements in the Construction of Cupola Furnaces—Building Materials for Old Style Furnaces—Blast Engines—Baker's Pressure Blower—Tuyeres and Nozzles—Dodd's Water-Jacketed Tuyeres—Werner's Patent Tuyeres—Arent's Syphon or Automatic Tap—Erection of Old Style Furnaces.

Advantages of the Blast Furnace.—Smelting in blast furnaces is generally adopted in America and Australia as being more expeditious and economical, and as allowing also of the smelting of mixtures of dry silver or gold ores with the argentiferous lead ores. The blast furnace requires less fuel than the reverberatory, and the labour in proportion to the yield of lead is also less; the production of lead being more rapid and the loss of lead smaller.

As comparatively pure galenas only are adapted for the reverberatory process, those containing earthy substances should be smelted in blast furnaces, as they require a higher temperature for their smelting.

The cupola furnaces are shafts, high in proportion to their width, and the ore, mixed with the fluxes and fuel, is smelted in them by the aid of a blast. The construction of these furnaces depends on the peculiarities of the ore which is to be treated, as well as on local conditions.

In former years the breadth of the cupola furnaces had to be limited, so as to submit the mixture when arriving in the smelting zone to the influence of the blast and without any dead centre, but with the result of the inventions perfected of late years there seems to be no limit as to the width and depth of furnaces, considering that cupola furnaces now in operation are capable of smelting 100 to 150 tons of ore in twenty-four hours.

Several points have to be considered in the construction of a cupola, such as the proper depth of the hearth, so as to allow of a separation of the lead, matte, and slag. The height of the furnace depends mainly on the character of the ore. Thus, very siliceous ores require higher furnaces, and there is no such loss of metals by volatilisation, whereas oxidised ores should be smelted in low furnaces. The bottoms of the cupola furnaces also vary. They are generally provided with a reservoir, or crucible, and from this they derive the name of crucible furnaces, and in the crucible the lead collects. The crucible furnaces contain all the molten material inside the furnace, and the combustion gases can only escape through the chimney, thereby permitting of the utilisation of all the heat without exposing the workmen to excessive heat and noxious gases.

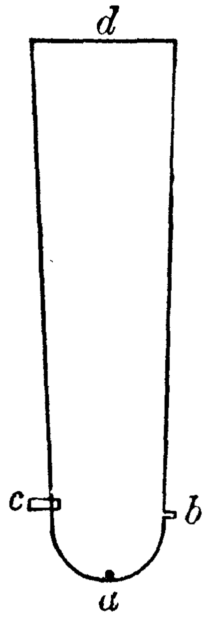

FIG. 11.
CRUCIBLE FURNACE.

The disadvantage, however, of these furnaces is, that accretions cannot be cleared out during the operation of the furnace, so that sows form, interfering with the regular working.

Fig. 11 shows the general outline of a crucible furnace: *a* is the tap hole, *b* the slag spout, *c* the tuyere, and *d* the furnace top.

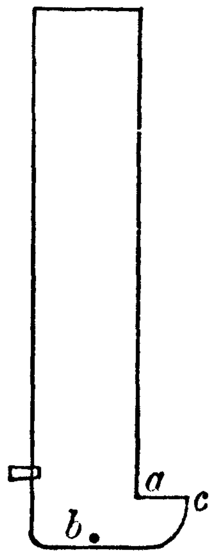

FIG 12.
SUMPFOFEN.

The sump furnace (*fourneau a l'avant-creuset;* the German *Sumpfofen*) contains in its deepest part only a portion of the molten mass inside the inner sump, and the part which protrudes is called the outer sump (German, *Varsumpf*). This construction permits of the introduction of crowbars into the furnace to detach wall accretions or to break any sows which may have formed. Fig. 12 shows at *b* the tap hole, *a* the breast, and the slag flows over *c*.

By *Spurofen* is understood a furnace which does not permit the accumulation of any metal inside, but the metal flows as soon as produced over the inclined bottom into a well located outside. As cooling of the molten mass outside the furnace takes place very rapidly, a separation according to specific gravity is not so completely effected, and consequently this description of furnace can only be employed for easily fusible substances. Fig. 13 shows at *a* the outer well or crucible, and the flow takes place through *b*—the *eye*. Sometimes the eye is not always left open, but is closed with a clay plug, which may be removed when desired with a pointed crowbar to let the slag or metal run out of the furnace. To get rid of the slag another opening is made in the front wall of the furnace, but higher than the first eye, and above the level where the metal accumulation takes place, and the fluid slag is carried through a channel or spout to conical-shaped iron pots mounted on wheels. These, when filled, are carried to the slag dump and discharged.

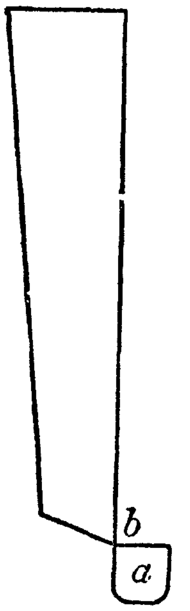

FIG. 13.—SPUROFEN.

There are two methods used for smelting lead ores in cupolas—namely (1) smelting raw ores with iron or iron ores or ferruginous slags; and (2) smelting roasted ores with iron or iron ores, ferruginous slags, or the addition of roasted matte or regulus.

In the blast furnaces the air is introduced by means of a tuyere, around which the molten slag collects, forming a prolongation of the metal tuyere, called a nose. There should be no flame visible at the end of the nose, and the nose itself should have a dark appearance. An experienced smelter constantly watches the appearance of the nose, and conducts his operations accordingly as to the proportion of ore mixture, fuels, &c.

Early German Cupola Furnaces.—The subjoined illustrations show the early furnaces used in Saxony. They are taken from plans furnished by the School of Mines in Freiburg to illustrate the gradual and progressive development of shaft furnaces.

The furnaces formerly employed were imperfect, as they were usually too high, had an irregular cross section, were wide in the tuyere zone, and were built with an outside crucible or sump.

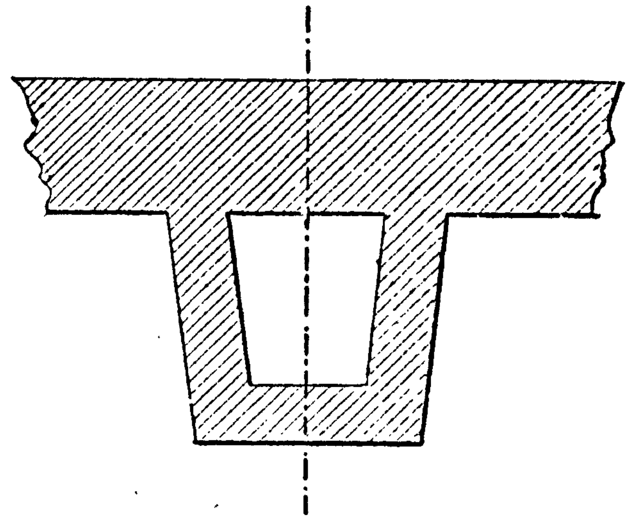

Fig. 14.—German Cupola Furnace. Horizontal Section across *e f*.

In following the gradual development of the blast furnace in the Hartz Mountains—the seat of the lead smelting industry,

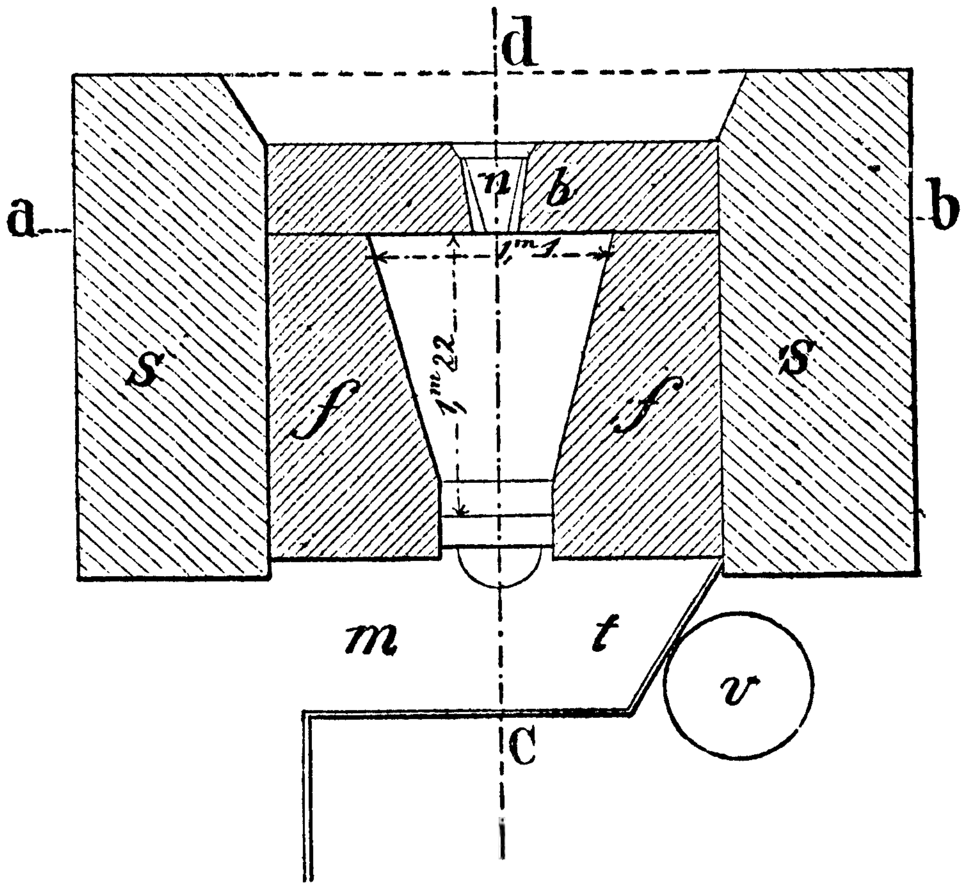

Fig. 15—German Cupola Furnace.—Horizontal Section across *g h*.

and the centre whence has emanated all the progress which has benefited the world at large—we find that in 1836 the *Röstöfen* was in use, which in shape is similar to the sump furnace. In 1854 the minerals were smelted in the *Schliegofen*. The cross-section of these furnaces approached that of

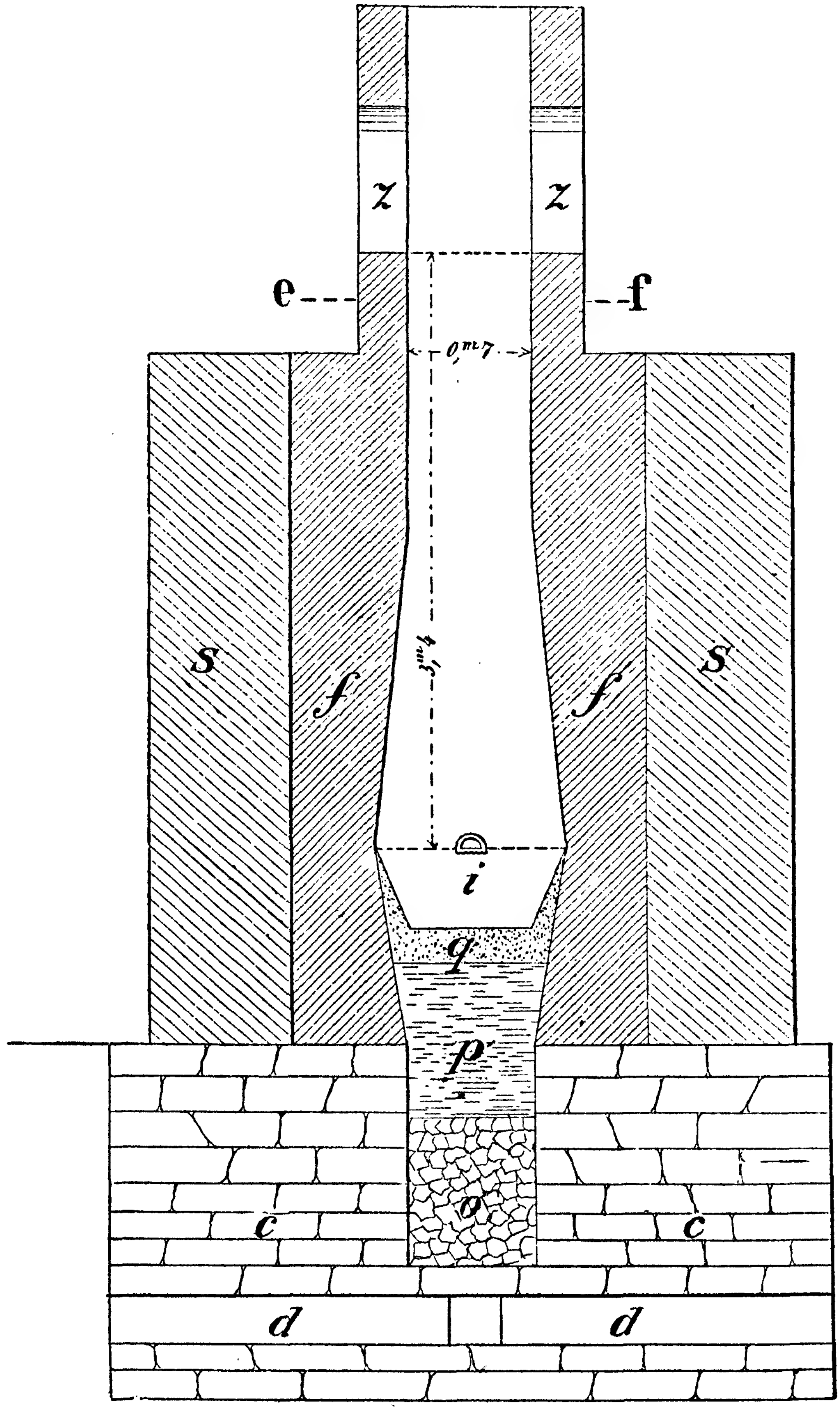

Fig. 16.—German Cupola Furnace.—Section across *c d*. Scale = $\frac{1}{62}$.

a horse-shoe and showed a tendency to the circular furnace

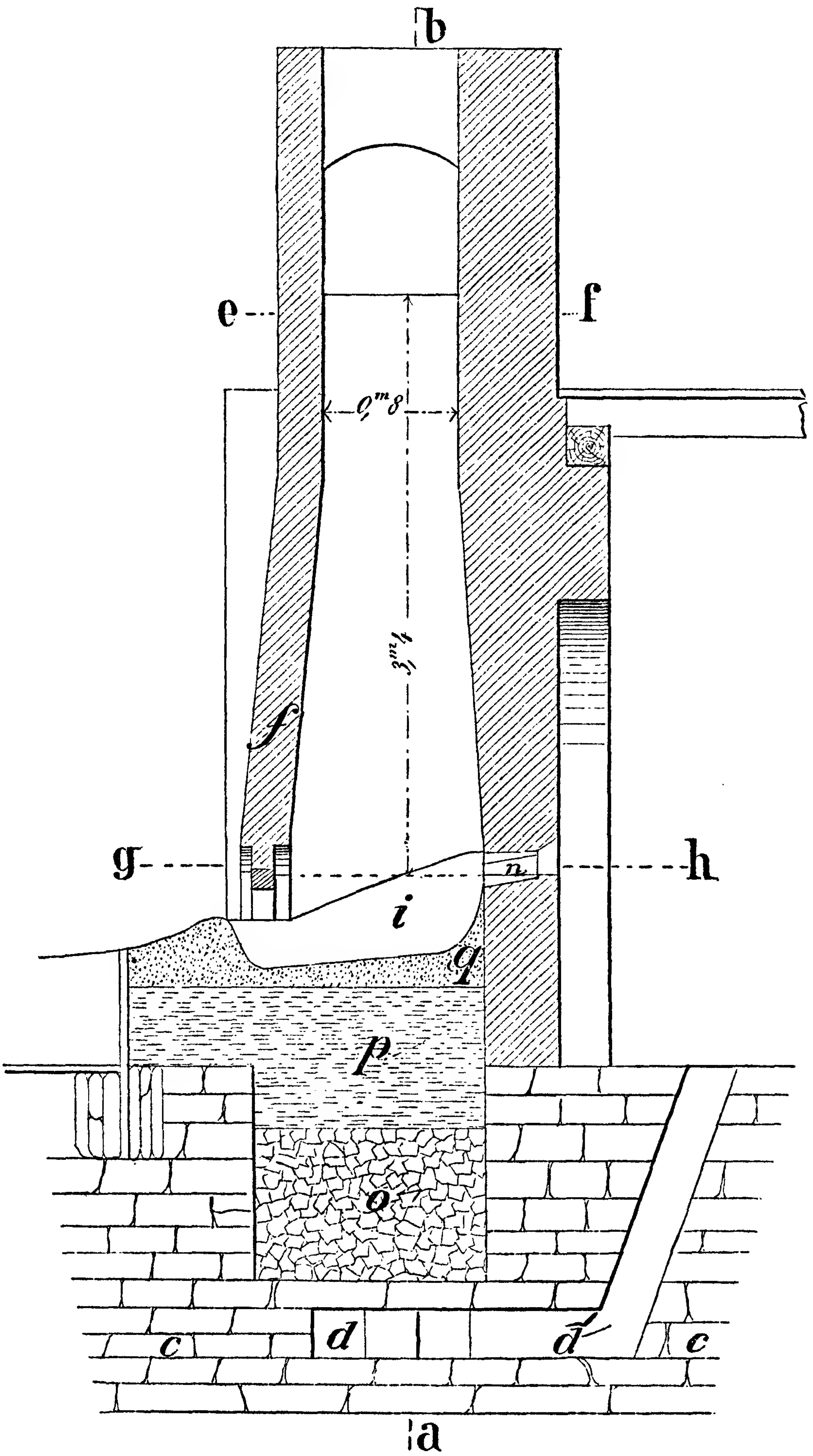

Fig. 17.—German Cupola Furnace.—Section across *a b*. Scale = $\frac{1}{32}$

and a grouping of the tuyeres around the base of the horse-shoe.

The defects of these early furnaces consisted in their irregular shape and their small cross-section; they were larger

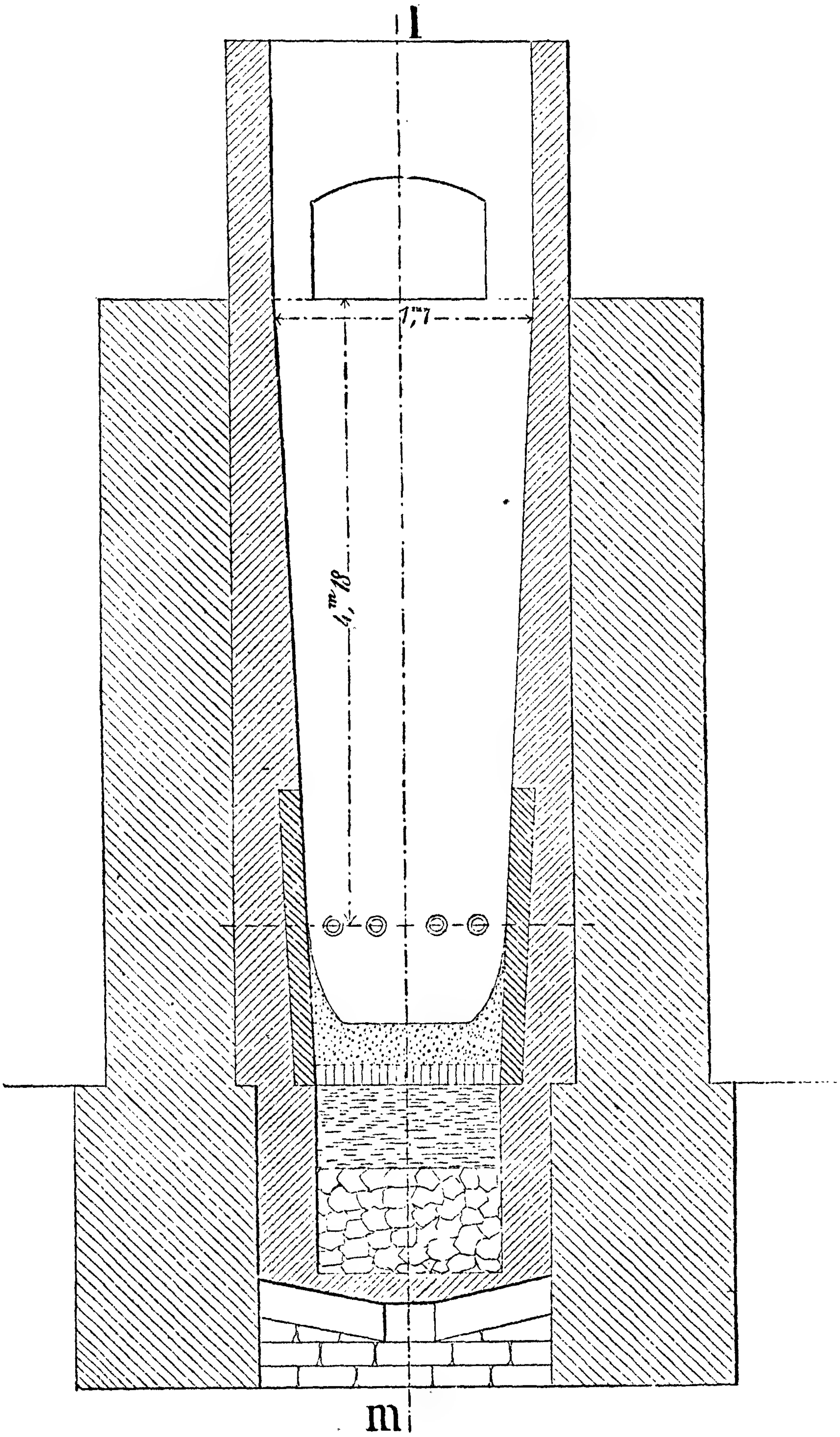

Fig. 18.—Four-Tuyere German Furnace.—Section along *p q*. Scale = $\frac{1}{66}$.

at the base with their fore hearth, in proportion to their interior, than was necessary; the vertical section was irregular, and had too few tuyeres. Their construction also was too massive, and the massive dust chambers were built on top of

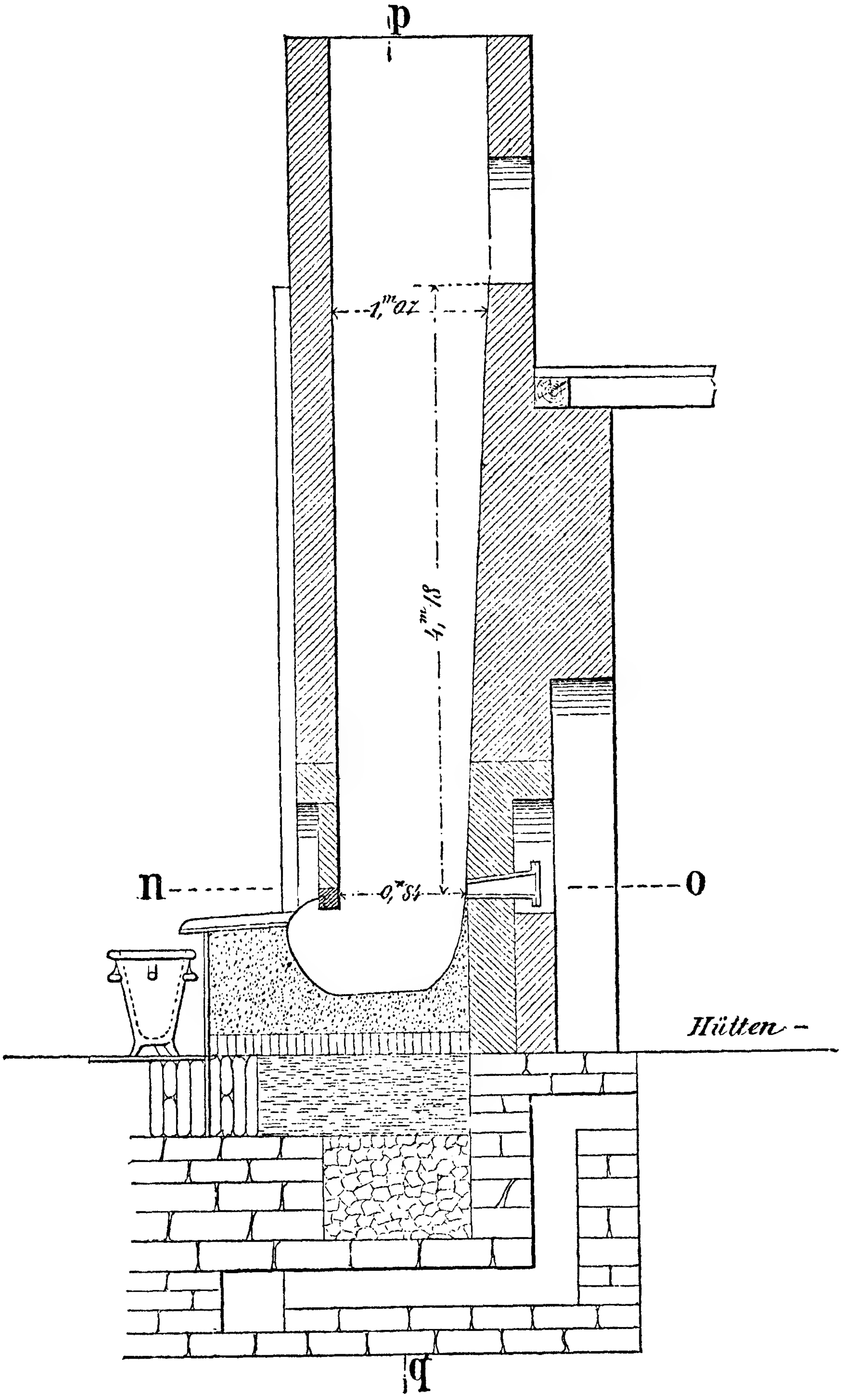

Fig. 19.—Four-Tuyere German Furnace.—Section along *m l*. Scale = $\frac{1}{66}$.

the furnaces, which created enormous and complicated structures.

On account of the shape of the furnaces the generation of heat was very irregular in the interior of the furnace; certain parts were too hot, and others were too cold; and those which became too hot burnt out too fast; and on the parts which remained cold, incrustations and sows accumulated. The fusion proceeded very slowly with a blast of too low a pressure. The slow passage of the materials, combined with the great height of the furnaces produced a strong reducing action and gave a metal charged with impurities. The shafts narrowed in their upper parts, causing an increase in the current of gases, which carried away metallic particles and caused heavy losses by volatilisation.

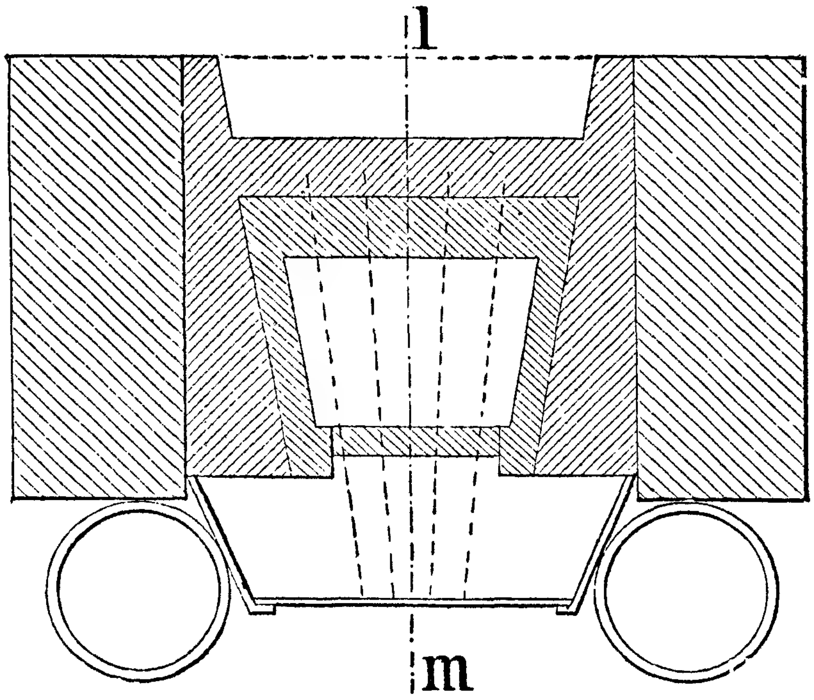

FIG. 20.—FOUR-TUYERE GERMAN FURNACE.—Horizontal Section along *n o*.

The first step in advance was made by the introduction of the Rachette furnaces. The principal point with them was, that they widened toward the top. But the main improvement was made when the rectangular and trapezoidal shape of the old furnaces was abandoned, and the circular form adopted, which allowed a regular distribution of the heat by placing the tuyeres radially around the circumference.

In 1870 the first large Piltz furnace was constructed at Clausthal, and it was not long afterwards that the same type

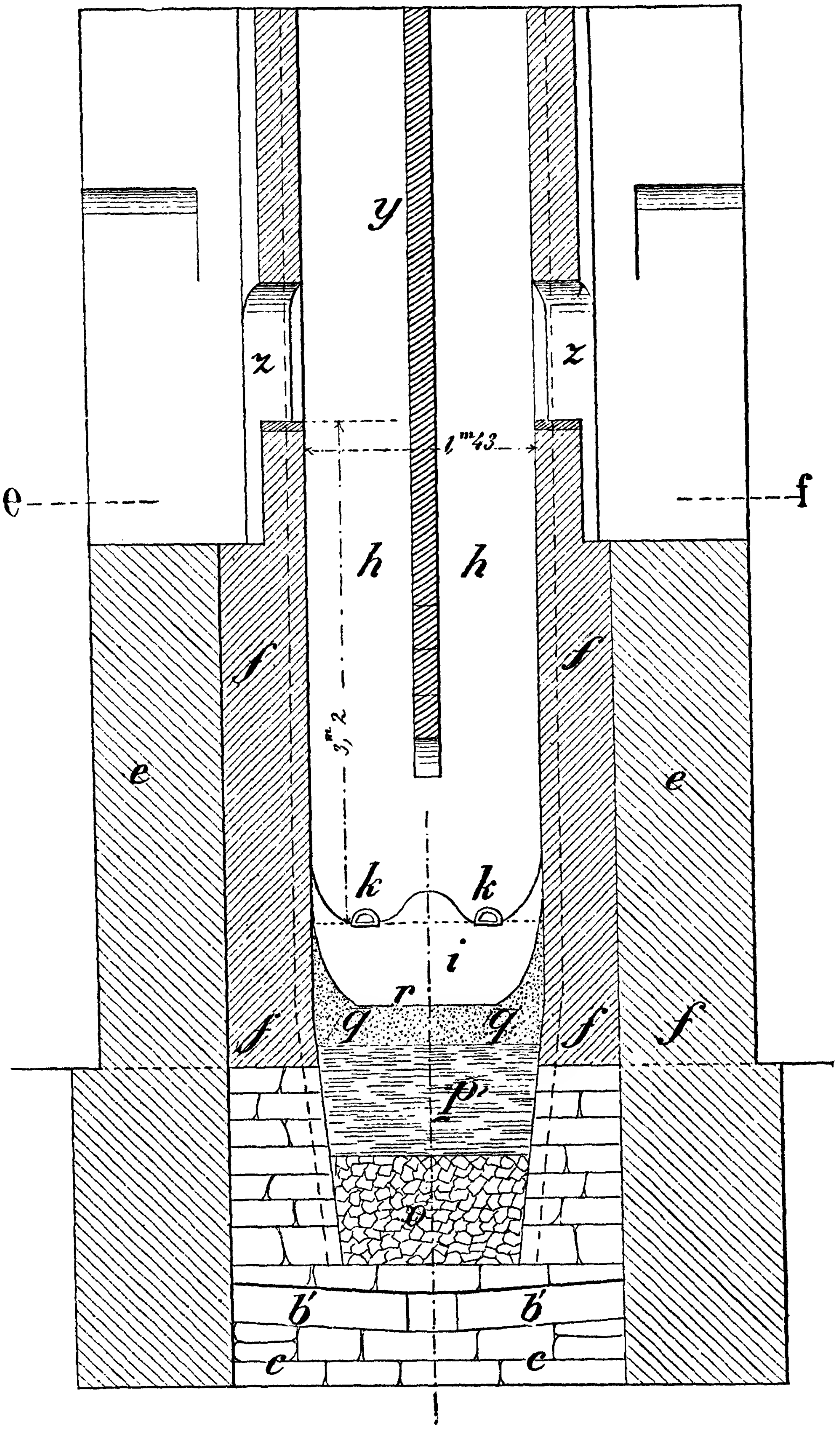

FIG. 21.—WELLNER'S DOUBLE FURNACE.—Section across *a b*. Scale = $\frac{1}{62}$.

of furnace was introduced in the then flourishing mining camp of Eureka, in Nevada.

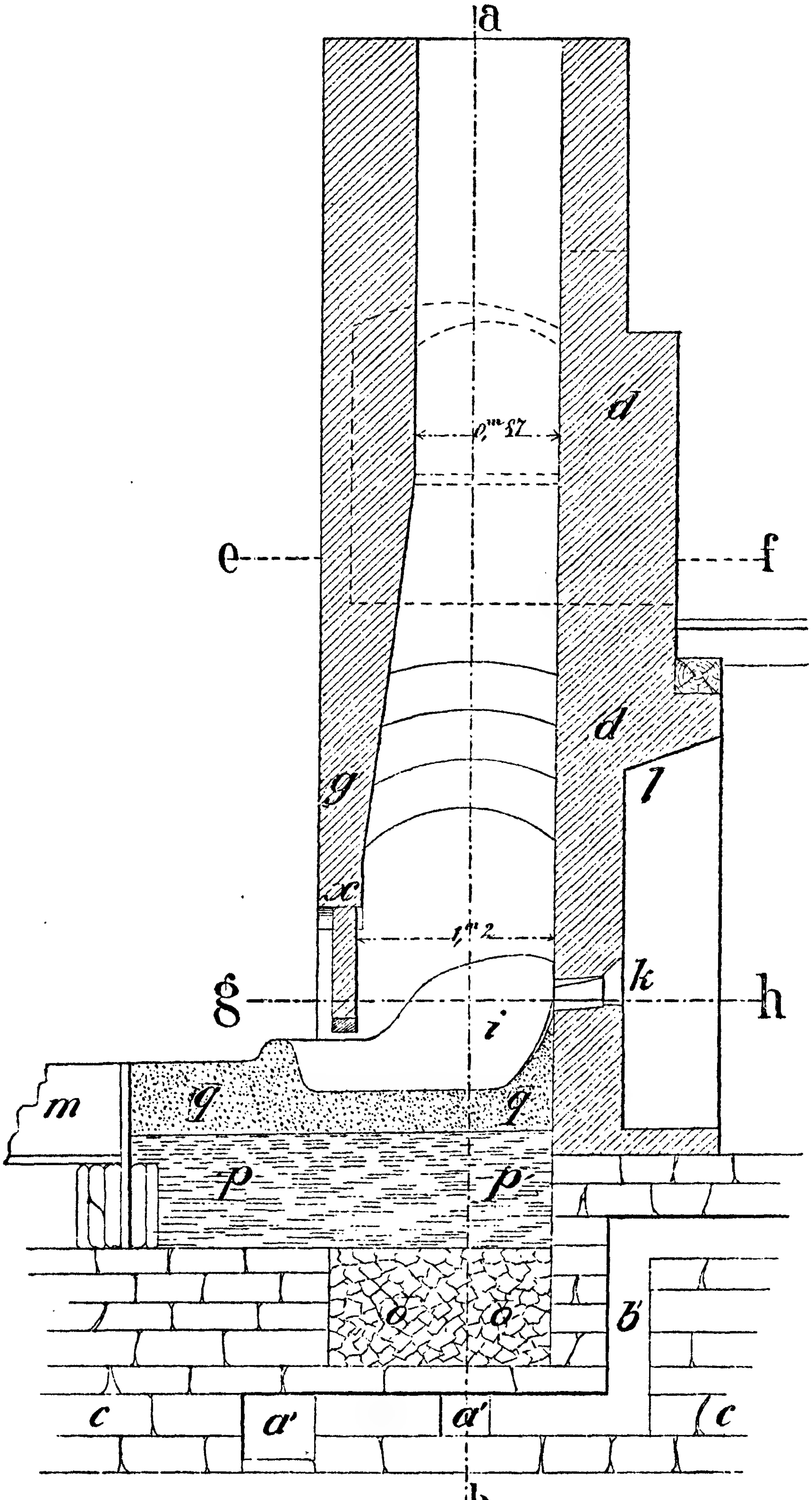

FIG. 22.—WELLNER'S DOUBLE FURNACE.—Section along *c d*. Scale = $\frac{1}{62}$.

In Fig. 15 the furnace (it will be seen) has the shape of a trapeze, the back wall *b*, where the nozzle *n* is located, being the widest base, but the shaft gradually narrows down toward the throat. The foundations, *c*, are of large blocks of granite or gneiss rock, having at *d* a drain for the escape of moisture; *s* are side walls of ordinary brick, with a fire-brick lining and front *f*; *i* is the hearth; *m* is the slag educt; *o* the sole formed of coarse slags; *p* the sole made of loam; *q* the sole bottom, composed of a mixture of coke-dust and fire-clay; *t* the fore hearth; *u*, channel for tapping off the metal; *v*, outside basin for receiving the metal; *z*, openings for charging the furnace.

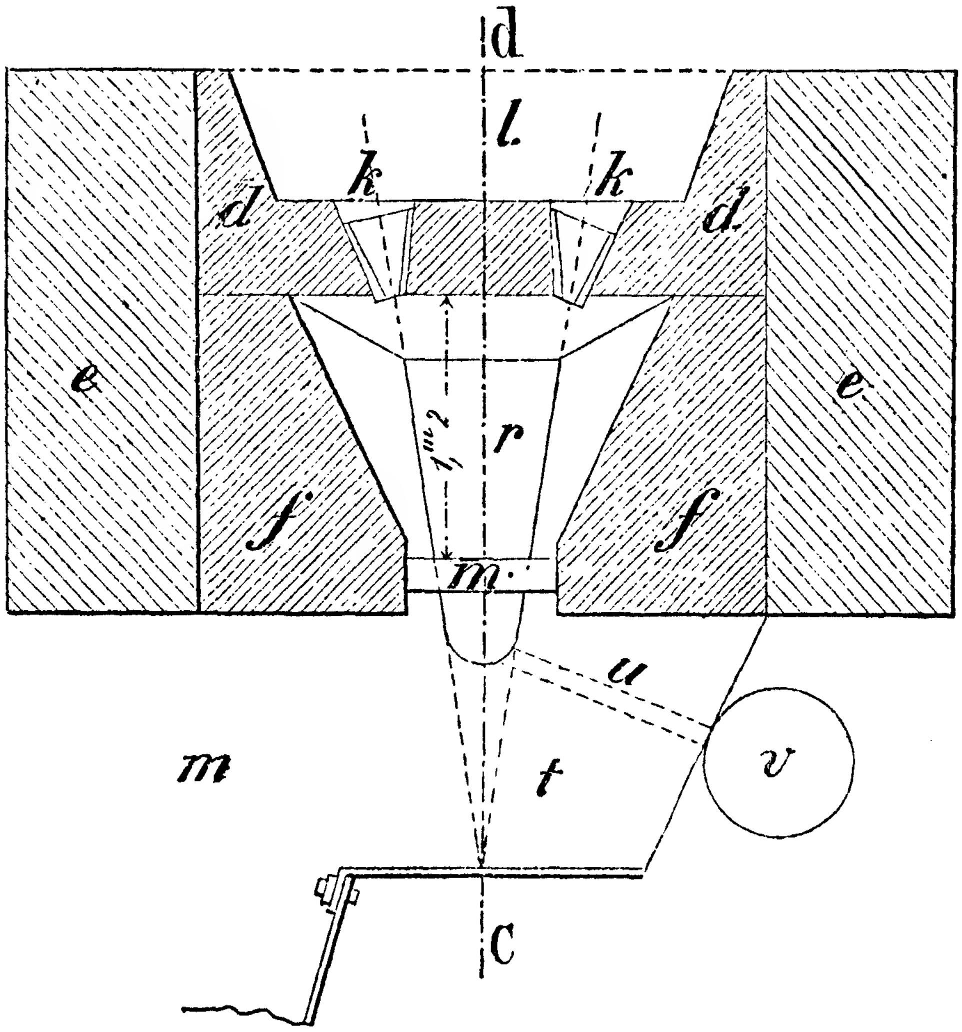

FIG. 23.—WELLNER'S DOUBLE FURNACE.—Horizontal Section along *g h*.

A cupola furnace with four tuyeres is shown in figs. 18, 19, and 20.

Wellner's double furnace was formerly used in the Freiberg smelting works, and its construction is shown in Figs. 21, 22, 23, and 24. At the Muldner works six such double furnaces were connected by means of a channel built at the top, for the purpose of collecting the metallic fume and ore dust. The channel leads into a chimney furnished with one division wall or each three furnaces. These furnaces were built up of gneiss and fire-bricks, and the hearths are constructed of brasque, made of three parts by weight of loam and two parts of coke-dust.

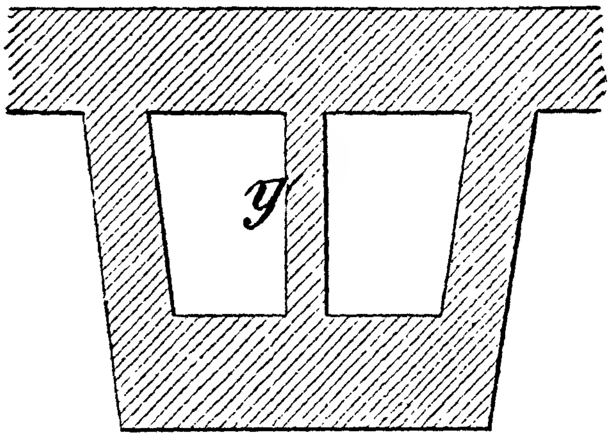

FIG. 24.—WELLNER'S DOUBLE FURNACE.—Horizontal Section along *e f*.

As shown in the sketches, the foundations, *c*, are built up of hewn blocks of gneiss, and *a′ b′* show drains to carry away the moisture; *d d* is the back wall; *e e* the rough outer walling; *f*, coating of fire-bricks; *g*, the front wall; *h*, the shafts; *i* is the hearth; *k* are the two tuyeres at the back walls; *l*, tuyere arch; *m*, the slag duct; *o*, the sole formed of coarse slags; *p*, the sole made of loam; *q*, the sole bottom, composed of a mixture of coke-dust and fire-clay; *r*, the sump; *t*, the fore hearth; *u*, channel for tapping off the metal; *v*, outside basin for receiving the metal; *x*, working holes; *y*, division wall; *z*, openings for charging the furnace. The tuyeres have a slight inclination, and the slope of the front wall is from 12 to 15 in.

Early Forms of Furnaces on the Pacific Coast.—In the early periods of lead smelting in the Great Basin, 20 years ago, the blast furnaces had an oblong rectangular cross-section, the size of the hearth being rarely larger than 20 in. by 2½ ft., and frequently they were drawn together at the top. The capacity of such a furnace, with one or sometimes two tuyeres, was about 6 to 8 tons per 24 hours. But of late years essential improvements have been made, the aim of all of which has been a higher production and less loss of metal in slags and by volatilisation. This result has been obtained by a complete alteration of the shape of the furnaces, by increase of size, and by the introduction of proportionately more compressed air through a larger number of tuyeres.

In regard to their shape, and the results obtained, two furnaces especially first came into prominent notice. These were

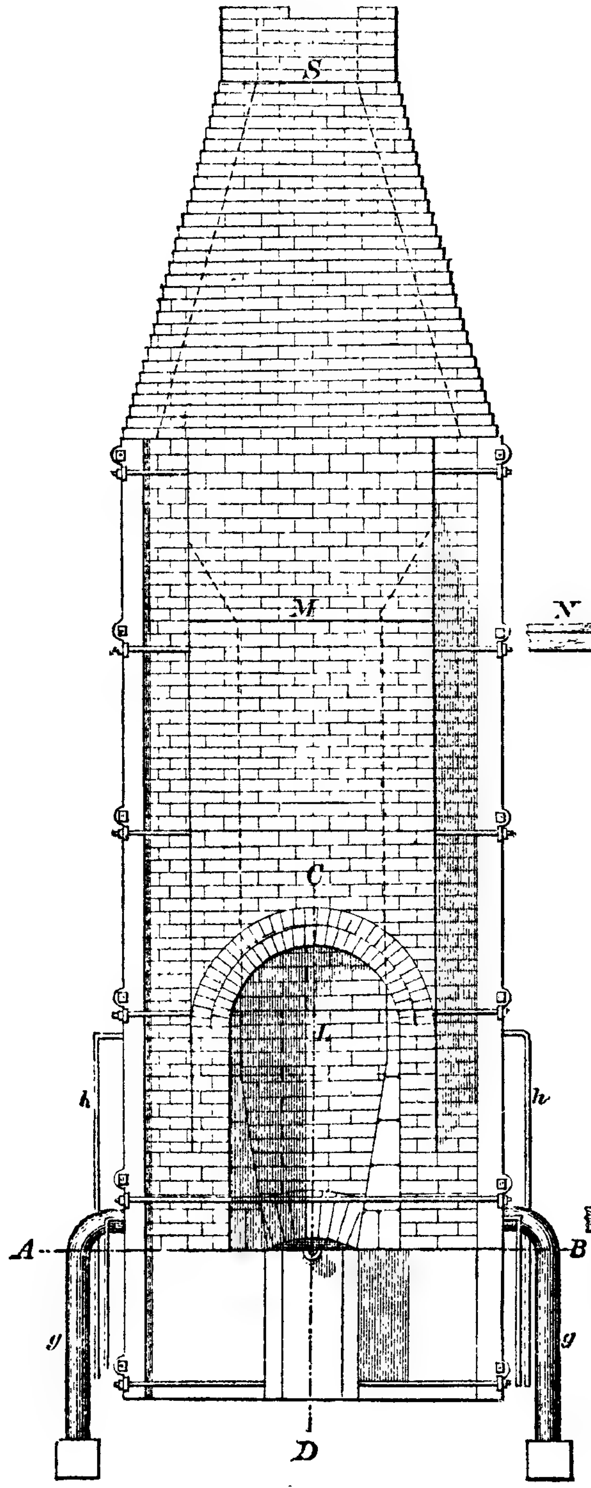

FIG. 25.—Front Elevation.

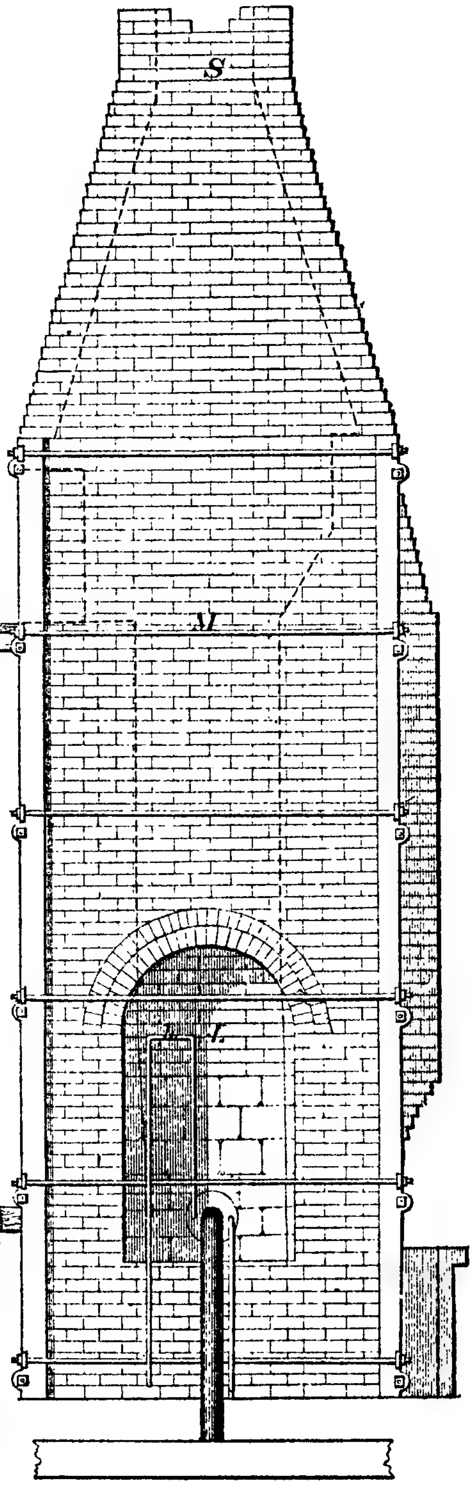

FIG. 26..—Side Elevation.

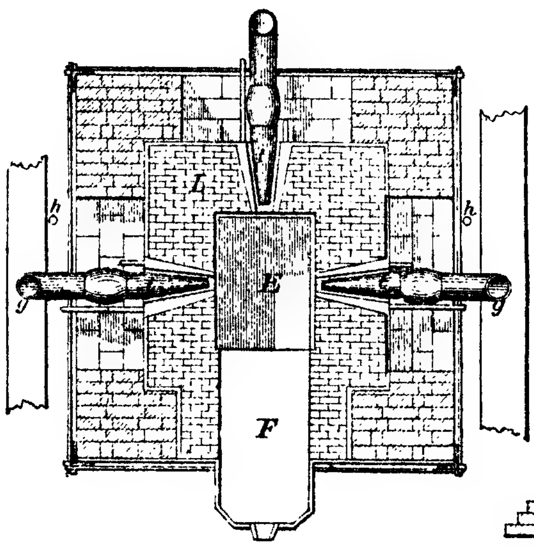

FIG. 27.—Horizontal Section.

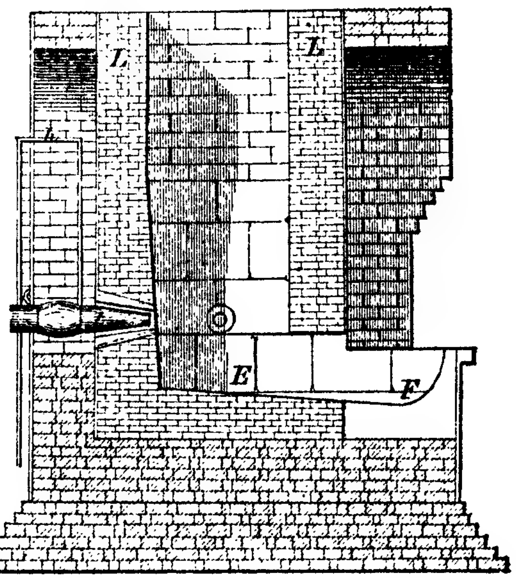

FIG. 28.—Vertical Section.

FURNACE AT OCEANA SMELTING WORKS, NEVADA.—Scale, $\frac{1}{64}$.

the Rachette furnace and the Piltz furnace. Of these the former has an oblong rectangular cross section and the form of an inverted truncated pyramid. Numerous tuyeres, cooled by running water, are placed in the long sides, in such a manner that the opposite currents of air pass each other. The Piltz

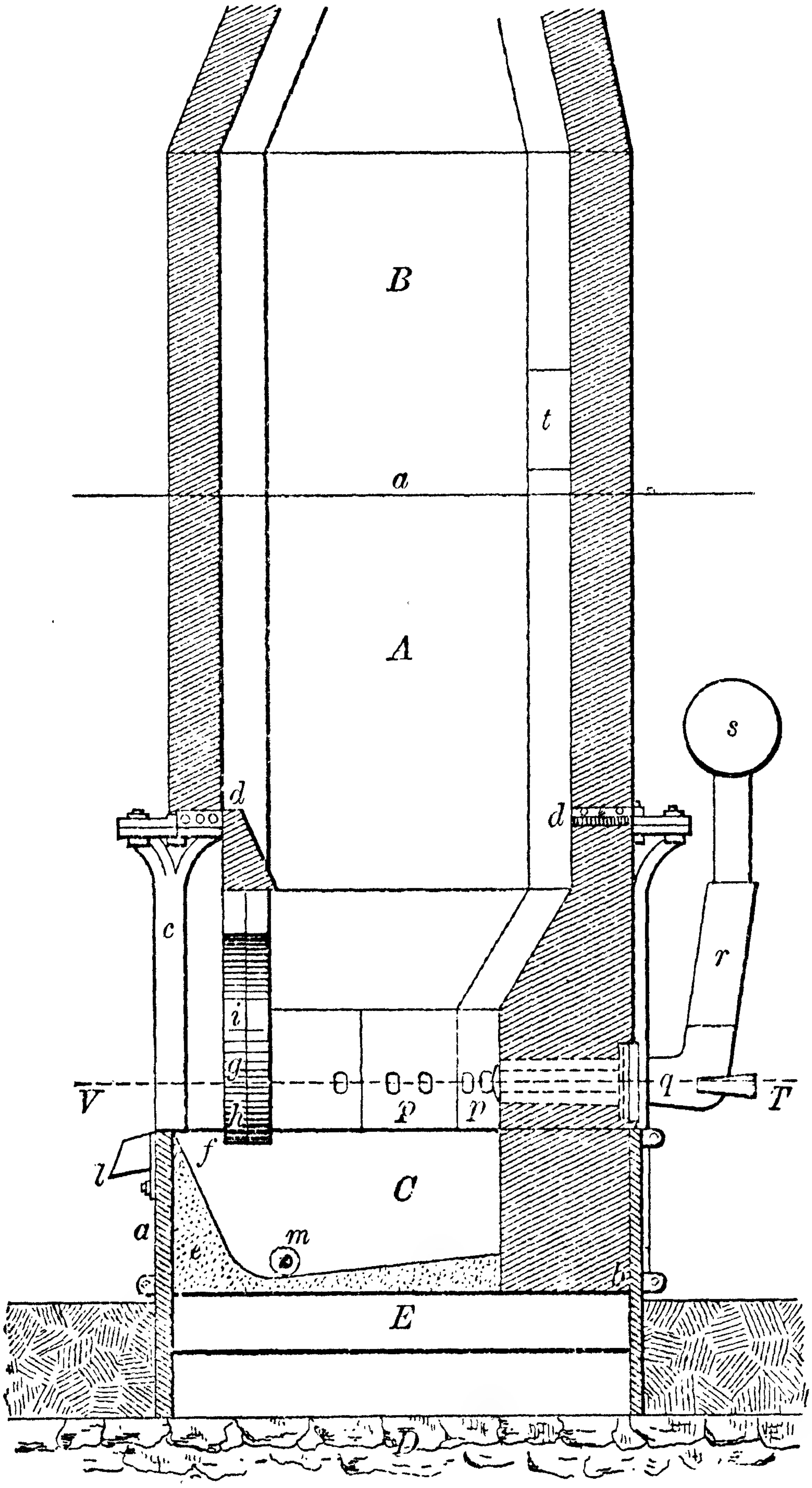

FIG. 29.—PILTZ FURNACE.—Vertical Section.

furnace has a hexagonal, octagonal, or circular cross section, and the shape of an inverted truncated pyramid or cone. Many tuyeres are placed radially around the furnace-centre, the breast alone being without them.

Both have the two most important principles in common—the application of more compressed air in a comparatively smaller space than in old-style furnaces, and a widening of the shaft toward the top. The first secures a more perfect and rapid combustion, and hence a more rapid fusion; the second causes the smelting zone to commence lower down in the furnace than formerly; the charges, lying firmly upon the slanting sides, force the gases and heat to pass through the whole column above, while the wider section above decreases the velocity of the upward current, and volatilisation is to a great extent prevented.

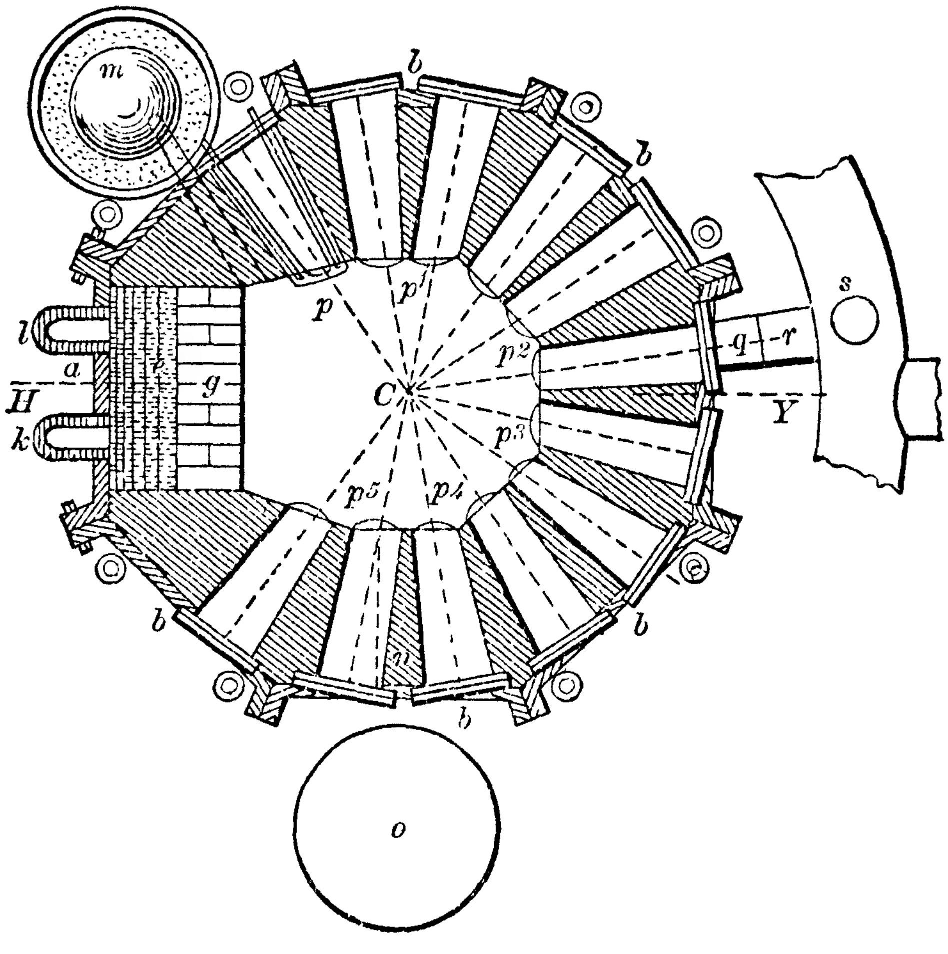

FIG. 30.—PILTZ FURNACE.—Horizontal Section.

Later experience taught that a combination of the form of the Piltz and Rachette would produce still better results, the capacity of the furnace being thus increased, while the management is less difficult. The best proportion of the hearth area

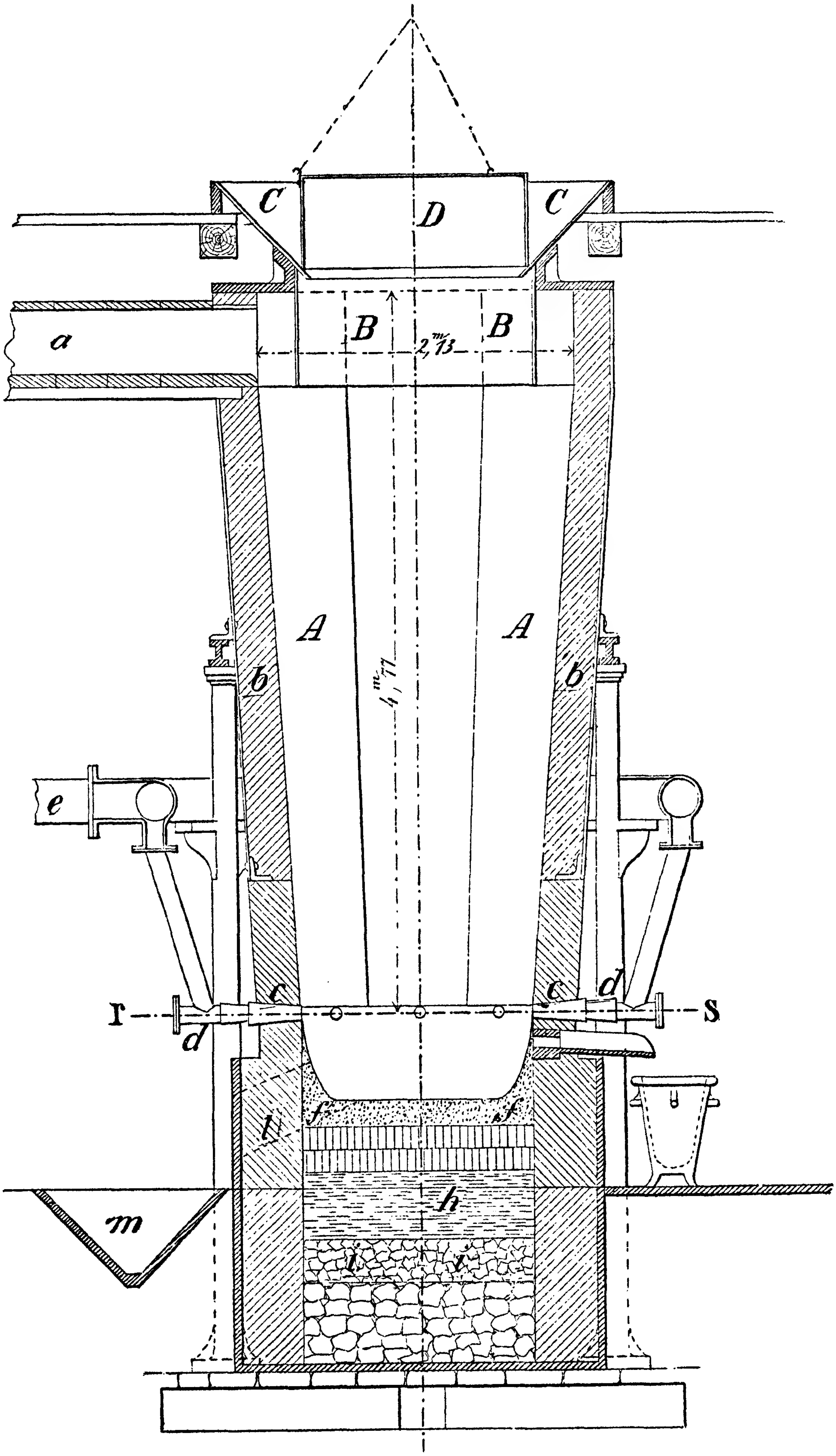

FIG. 31.—PILTZ FURNACE WITH FEEDING APPARATUS.—Vertical Section. Scale, $\frac{1}{62}$.

to the throat area may be accepted as 1 : 2½ for a height of from 10 to 12 ft. It is rarely necessary in the Western districts to give a greater height to the furnaces.

A shaft furnace, such as was constructed some 20 years ago in Nevada to smelt some antimonial lead ores at the Oceana works, in Humboldt county, is shown in Figs. 25 to 28. Figs. 25 and 26 show a front and side elevation; Fig. 27 a horizontal section through A B; and Fig. 28 a vertical section through C D of Fig. 25. The total height of the furnace is about 40 ft. The hearth is built out of stone, cut from trachytic rock that occurs a few miles south of the works. The shaft is of common brick, with a lining of fire-brick from the hearth up to the throat.

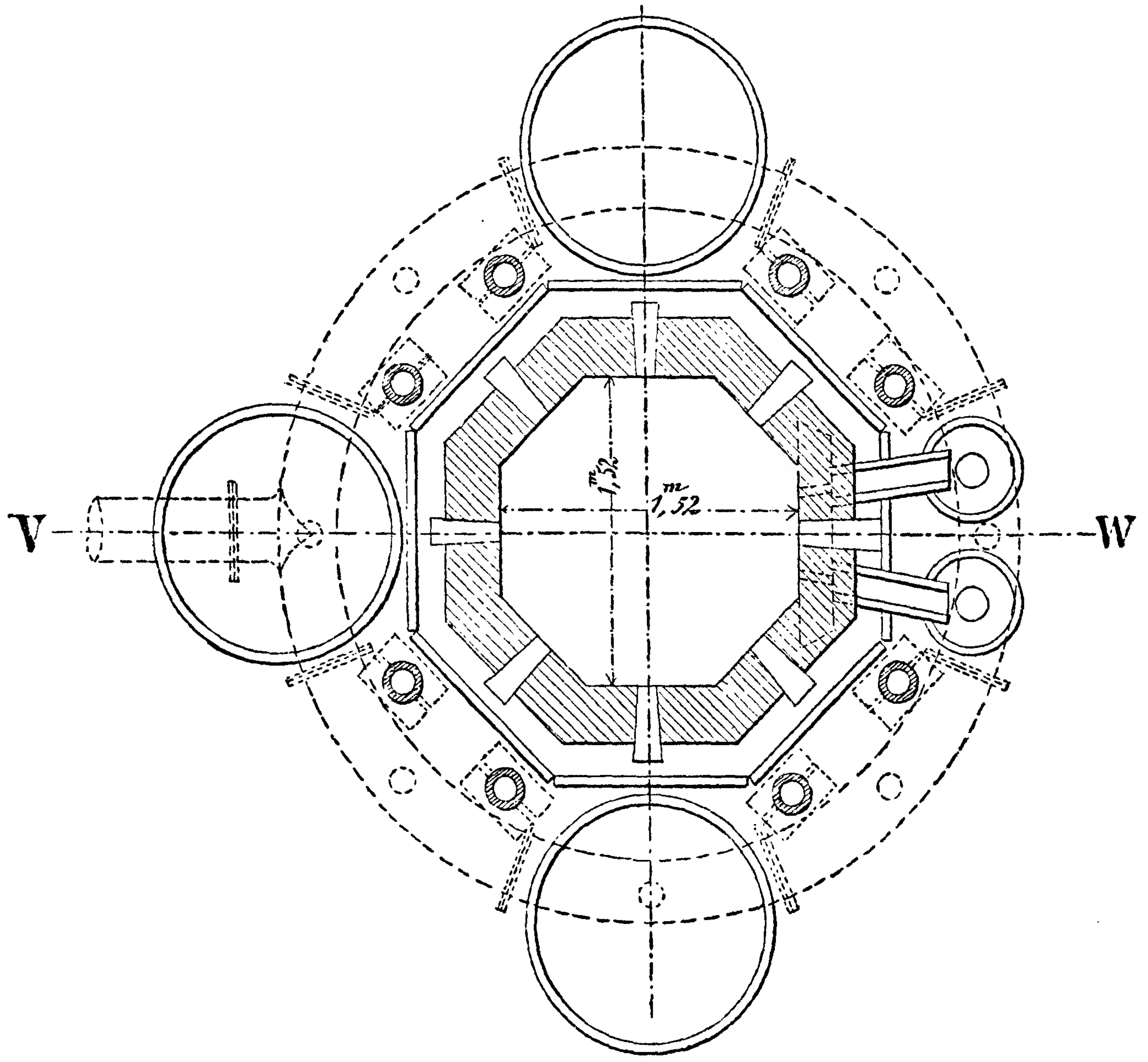

FIG. 32.—PILTZ FURNACE.—Horizontal Section along *r s*.

In the drawing, E is the hearth or sole; F the sump or receiver; *t*, tuyeres; *g*, blast pipes; *h*, pipes to supply water to the tuyeres; L, lining of the furnace; M, throat; N, floor for feeding ore; S, stack.

The illustrations given in Figs. 29 and 30 show the construction of an early Piltz furnace for smelting lead ores, as erected by Mr. Eilers for use in the West.* The longitudinal section, Fig. 29, is made along the line H Y in Fig. 30; and the cross-section, Fig. 30, is T V in Fig. 29; A is the shaft of the furnace; B, the chimney; C, the hearth; D, the foundation; E, the bottom stone; *a*, the dam-plate; *a* and *b*, hearth-plates of cast iron; *c*, cast-iron pillars, on which the flange *d*, rests; *e*, dam; *f*, fore hearth lying outside of the furnace; *g*, bridge; *h*, tymp-stone, or front made of clay; *i*, breast; *k*, slag spout; *l*, matte spout, or iron spout; *m*, siphon tap; *n*, tap hole; *o*, lead well; $p, p^1, p^2, \ldots p^6$, tuyeres through which the blast enters the furnace; *q*, nozzles (made of galvanized iron); *r*, wind bags made of canvass; *s*, induction pipe; *t*, charging door or feed-hole; *u*, throat.

The wall in which the breast lies is called the front wall, the one opposite to this, the back wall; the adjoining ones the side walls. This furnace is open-breasted.

The masonry work, especially the lower part, of all rectangular furnaces, is strongly bound together by 1½ in. tie-rods of wrought iron laid in the outer walls. Each pair of them lying in the same vertical plane, passes through a wooden, or, better, a cast-iron brace, which is screwed tight to the wall. Round furnaces are tied either by means of iron rings passing around the outside, or by complete shells of boiler or sheet iron.

The height of shaft furnaces ranges from 8 to 20 ft. above the centre of the tuyeres. Low furnaces are necessary for basic ores, especially such as carry a great deal of oxide of iron, to prevent the reduction of metallic iron. High furnaces are of good service for refractory ores, where a bi-silicate slag is desired. In high furnaces a higher temperature is attained with a less amount of fuel than in the low ones. But a low furnace is easier manipulated when deranged than a high one. Where the character of the ores changes frequently, a low furnace is

---

* "Mineral Resources of the United States."

preferable. The standard height out West is 10 ft. above the centre of the tuyeres. On the top of the furnace is an iron, or better, brick smoke stack, high and wide enough to carry off the fumes.

The manner of charging or feeding is of importance, as it affects the working of a furnace materially. Furnaces of small dimensions generally have a feed hole a few inches above the throat, on that side of the furnace directly opposite the front wall. The proper proportion of fuel, either by measurement or weight, is introduced first, and on top of that the ore, which may be scattered all over the area of the furnace, leaving an empty space only at the front wall. More capacious furnaces require two feed holes, which are situated at nearly right angles to the breast, *i.e.*, in the side walls. The ore is not spread over the area of the throat, but charged round the tuyere-walls, leaving a core of coal in the centre. To insure regularity in charging, the breast of a furnace is frequently provided with a funnel, the opening of which can be kept closed by a sheet-iron box let down from the top while charging. As soon as it is time to charge the furnace, the box is raised by means of a counterpoised lever, and the charge drops down. After emptying the funnel, the box is lowered again. This arrangement protects the workmen from noxious vapours. Where no condensation chambers are used, this box runs out into a pipe, which is movable in the stationary smoke stack.

The Piltz furnace with a feeding apparatus on top is shown in Fig. 31. A is the furnace shaft; B cylinder with funnel top C; D bell for charging by raising it up; *a* tubes for gas; *b*, *b*, fire brick surrounded with iron plates; *c*, *c*, tuyeres; *d*, *d*, nozzles; *e*, the blast-pipe; *f*, hearth made of brasque; *h*, fire clay, *i*, slag bottom; *l*, the tap-hole; *m*, troughs or pots for lead and matte; *n*, slag vessel. The furnace is covered with iron plates, and is furnished with a funnel and charging cylinder at the top, similar to the iron blast furnaces. The height of this shaft is 20 ft., with 5 ft. diameter below, and 8 ft. above. Before blowing in the furnace the plates inside are covered with a layer of gypsum, upon which is plastered a layer of slag; by this means a campaign of two or three months is accomplished without repairs.

Improvements in the Construction of Cupola Furnaces.—Having passed in review some of the old style furnaces such as were in use in Europe and the United States before the year 1870, it will be well to mention some of the improvements and ameliorations which were gradually introduced before we arrive at the modern cupolas, which will form the subject of the next chapter.

The old style furnaces had an irregular cross section; they were of a considerable height; they were enlarged in the smelting zone; they had a fore-hearth; the distribution of the blast was not in proper proportion to the area of the smelting zone; they were narrower at the feed opening than in the tuyere region; and in some cases the axis of the furnace was not vertical.

If we look over the illustrations given in some of the best known works on metallurgy, we find the dimensions of the masonry surrounding the shafts of an enormous thickness, and above them are towering heavy, massive structures of imperfectly arranged dust chambers; and one can well imagine the difficulties which a smelter had to encounter to keep such a furnace in proper working condition, when there was no possibility of access to the interior, and any slight derangement must have caused a long and costly stoppage. The shape of the furnaces prevented a regular development of the temperature, which meant a rapid burning out of the lining in the hottest portions, and the formation of incrustations and sows in the cooler parts. The material of the smelting charge passed through slowly, having an insufficient blast at a low pressure. The result was a strong reduction of all the base metals associated in the minerals, which gave a very impure lead bullion or work lead; and as the shaft narrowed towards the top, there was an increase in the gas and air current, resulting in the production of a large amount of flue dust with its accompaniment of loss of metals; and not only did this result from the increased current, but the furnaces flamed at the throat, causing losses by volatilisation.

I happened to be in Eureka, Nevada, when these questions were discussed, in 1870, by the metallurgists then in charge of the smelting operations, and several of these gentlemen have since largely contributed to the great successes which have been achieved in many of the silver-lead smelting regions of the United States. The defects I have referred to led them to

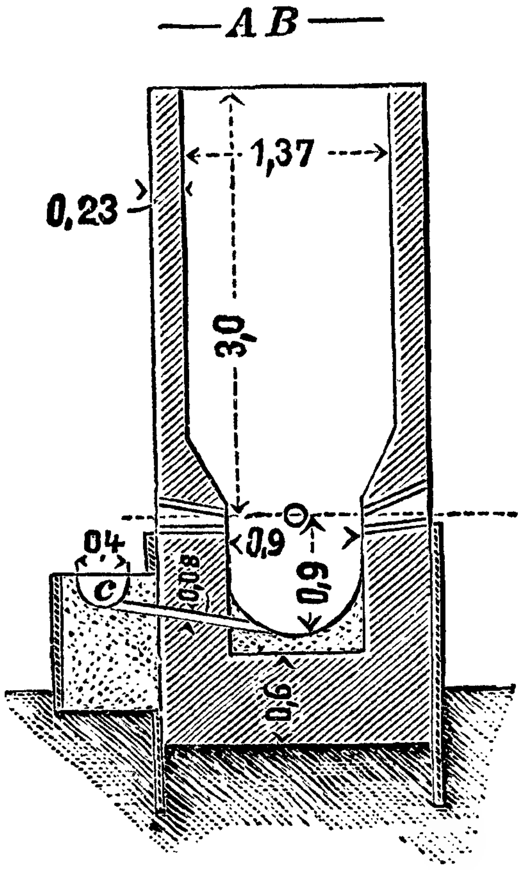

Fig. 33.—Vertical Section through *A*, *B*.

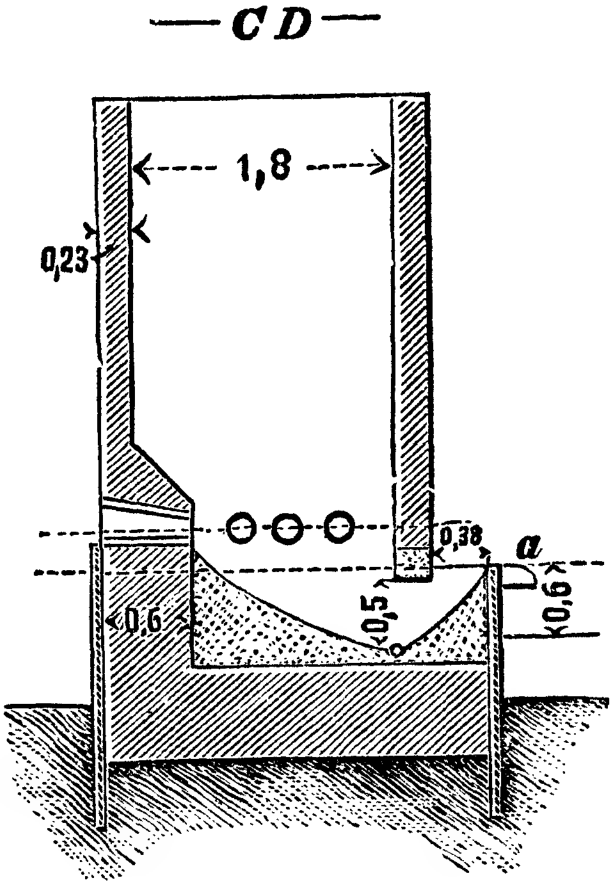

Fig. 34.—Vertical Section through *C*, *D*.

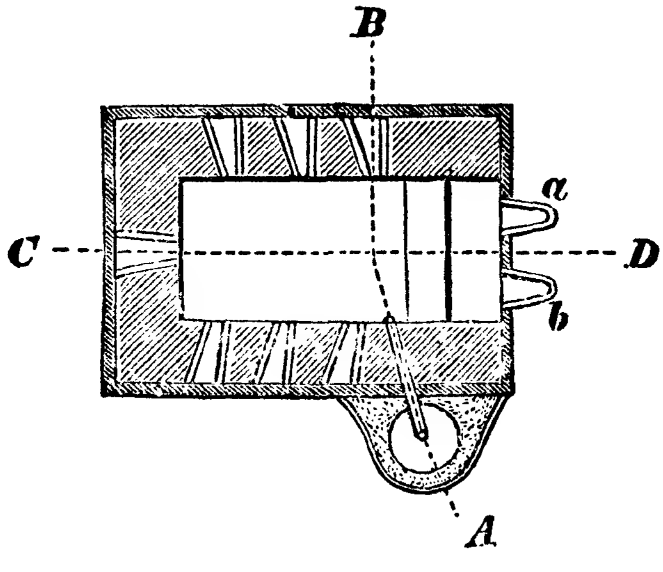

Fig. 35.—Horizontal Section.

Rachette Furnace.

adopt the Rachette furnace, which offered great advantages over the old style, as the shaft was enlarged at the throat, causing a diminution of the gas current and of the loss of fine dust; and as the current cooled itself in its upward passage, the reducing action diminished and the furnaces did not flame so much.

It was also soon found that by substituting the circular for the rectangular section a more even distribution of the blast could be effected, by giving the requisite number of tuyeres proportionate to the cross section of the furnace, and this resulted in the introduction of the Piltz furnace. And when Mr. Arents invented the syphon tap, the Piltz furnace was provided with this arrangement, and the necessity of the large fore-hearth was obviated, which we find so frequent in the old-style furnaces.

The Rachette furnace has a rectangular section, longer on one side than the other. The hearth bottom slopes downwards towards the narrow end. A furnace of this description was erected at the Atlas works, in Eureka, as shown in Figs. 33, 34, and 35,* where dimensions are given in the metric system. The tuyeres have a slight inclination. *a* is the slag spout; *b*, the matte spout, which lies a few centimeters lower, the channel leading to the syphon tap is 8 centimeters in diameter. There are seven tuyeres, three on each of the long sides, and one at the back.

Building Materials for Old Style Furnaces.—Rubble stones are used for building the foundations and sometimes the outer casings of furnaces, but the latter are generally made of common brick or dressed stone to present a handsomer appearance. Those parts of a furnace, however, which are most exposed to an intense heat and the corrosive action of ore and slag, must be constructed of refractory or fire-proof material. Of such there are certain sandstones, free from alkaline matters and metallic oxides. A small percentage of iron oxide is less detrimental than alkaline earths or feldspar. The

---

* These illustrations are taken from Balling's "Metallurgie."

introduction of water-jacketed furnaces has much simplified the construction of furnaces.

Granite does not answer the requirements of a fire-proof material, and is mostly used as bottom-stone only. In Argenta, Montana, however, quartzose granite had been used in the furnaces, and has been found to stand campaigns of three weeks' duration.

Instead of the natural fire-proof stones, the majority of smelters use material of artificial makes—such as English, Pennsylvania, and Colorado fire-bricks. Sun-dried bricks or adobes, moulded of various proportions of good clay and coarse quartz sand, are still to be seen in Mexico. They were used in the White Pine smelting works in early days.

The clay used about a furnace ought to be refractory, or nearly so, and plastic at the same time. Lean clay serves well enough as a mortar, but is unfit for a great many other purposes. Good fire clay contains from 50 to 70 per cent. of silicic acid, and from 30 to 50 per cent. of alumina.

As a mortar for the foundation walls and the outer casings, a mixture of slacked lime and river sand is used; for the inside, or lining, however, as for all parts of a furnace directly in contact with heat, a mixture of refractory clay with quartz sand or ground sandstone has to be used. The clay, of course, must be ground and sifted. Lime mortar in this instance is unfit for use, as it crumbles off in the heat, and allows the slag in combining with it to creep through the joints.

Blast Engines.—The blast engines in use in America are the different sizes of Sturtevant's fan, and Root's or Baker's pressure blower. The latter, which yields a much higher pressure, is better for lead smelting, and may possibly compete with cylinder blast engines, where coke is used in smelting. The only advantages the former have over the latter are their cheapness, and the small amount of power they require. A Root's blower, No. 8, yielding sufficient blast for three large sized furnaces, does not require more than 20-horse power.

The pressure of the blast varies in different cupola furnaces, and ranges from 5 to 25 ounces, depending on the amount of slag, dirt, character of the ore, &c., in the furnace. The average pressure is measured by inches of mercury. To calculate the melting capacity of a round or elliptical furnace, the following is an approximate rule when coke is used as fuel:—Multiply the area of the cupola at the melting zone, in square inches, by 7, the product will be the number of pounds per hour the furnace is capable of melting. To find the area of an elliptical cupola, multiply the larger diameter by the smaller, and their products by 0·7854; the last product is the area.

The compressed air is carried by means of galvanized iron pipes, for the distribution of the blast; as well as by thin galvanized iron tuyeres, connected with the branches of the blast pipes by means of canvas hose or wind bags.

To give an idea of the capacity of some of the blowers in use, I may state that according to size they yield from 12 to 45 cubic ft. of air per revolution, and make from 80 to 130 revolutions per minute, and can therefore deliver from 1,000 to 4,000 cubic ft. of air per minute; with an extreme limit of pressure in inches of mercury ranging from ½ to 1½ inches.

The horse-power required to drive the blowers at a given rate is obtained by the following empirical formula: V, being the volume of blast in cubic feet to be delivered in one minute; P, the pressure shown by the manometer in the blast pipes, expressed in ounces per square inch; H, the horse-power; and h, the power required to overcome friction, varying with the size of the blowers:

$$H = \frac{V \times P \times 0{\cdot}003 + h}{11}$$

The power required to run one of the blowers is proportionate to the pressure of the blast, volume delivered, and friction; blowers of different sizes require the same power when they deliver the same volume of blast.

Baker's Pressure Blower delivers a positive blast, the volume of which is proportionate, for each size, to the number of revolutions. The blower consists of a cast-iron case, A, Figs. 36 and 37, strongly ribbed and bolted, rectangular in

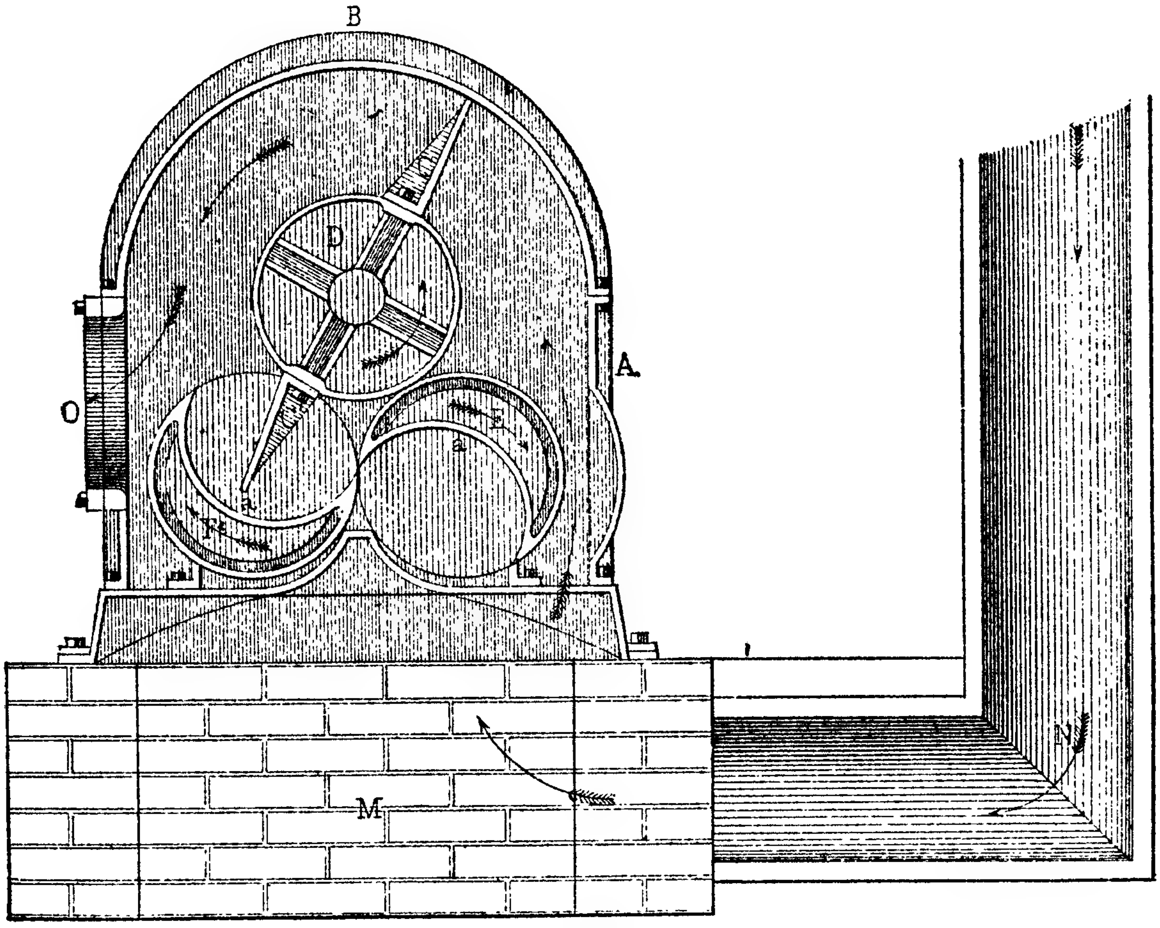

FIG. 36.—Section. Scale, ½ inch = 1 foot.

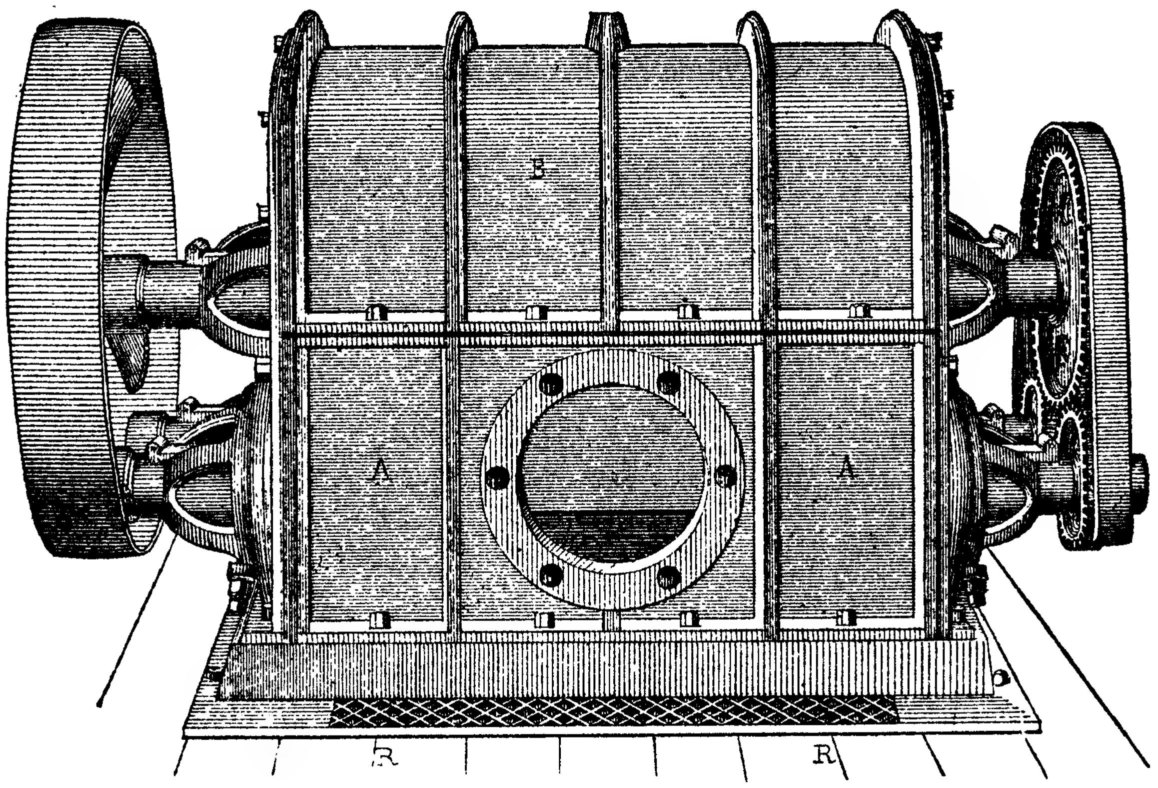

FIG. 37.—Perspective View.

BAKER'S PRESSURE BLOWER.

plan and section, and of an arched top B; inside of this works a drum, D, carrying two tapering arms, C C^1, which sweep round so close to the interior periphery that no air escapes. There are, besides, in the cast-iron case A, two other drums, E and F, acting as valves; each is provided with a crescent-shaped abutment and recess, which allow the wings of the fan, C C′, to pass it. The three drums are connected by suitable gearing on the outside of the case, as is shown in Fig. 37, in such manner that the revolutions of the drum valves draw air isochronously with those of the fan drum. By their combined operation, air is drawn in at one side of the apparatus at the ordinary pressure, and compressed at the other to the pressure required, this pressure being in direct proportion to the velocity of the drum.

The blower is placed on a brick chamber, M, Fig. 36, connected with a sheet-iron pipe N, through which air is drawn. This is the best arrangement, for by its means accidents which might result from the introduction of dust are prevented; and meanwhile concussion of air is avoided, which renders the machine comparatively noiseless. But the sheet-iron pipe, N, is often dispensed with, and air is simply drawn through the grating, R R, placed in front of the blower, Fig. 37. The blower is connected, at O, with the general system of blast-pipes by means of galvanized sheet-iron pipes, which must be air-tight. When the apparatus is in full blast, a slight and regular pulsation is felt at two or three small holes placed at the rear of the case.

The number of blowers in use at any individual smelting work corresponds to the number of furnaces at work, and as a matter of course the capacity numbers of the blowers correspond to the smelting capacity of the furnaces. The blast is always distributed by branch pipes from an induction pipe surrounding the furnace.

When the smelting works have only one furnace, the induction pipe is placed in direct communication with each blower by means of a branch pipe, which in this case acts as a main.

The system generally adopted is, at smelting works working with two or more furnaces, to connect all the blowers with one main pipe, from which branch pipes distribute the blast to the induction pipes of each furnace. The whole system of blast pipes, including the tuyeres, with the exception of the canvas wind bags, is generally made of galvanized sheet iron.

The blowers, if several are used, are connected with the main pipe by means of branch pipes, as shown in Fig. 38. The two blowers, A and B, communicate with the main pipe R′, by means of the pipes E, each of which is provided with dampers or sliding valves, F, regulating the draught, and with safety valves, S, regulating the pressure. The safety-valves are set to a pressure of about 1 in. of mercury. The draught is regulated in the main pipe R′, by means of dampers, F, or sliding-valves worked by a lever. A similar damper, F″, allows the excess of blast to escape from the main pipe. The branch pipes T′, provided with dampers F, worked like the preceding, allow the introduction of the proper amount of blast required by each furnace; each pipe, T′, communicates at Z″ with a manometer.

By this disposition an even pressure of blast is secured in the main pipe, from which the proper amount required for each furnace is taken at will. No provision has so far been made

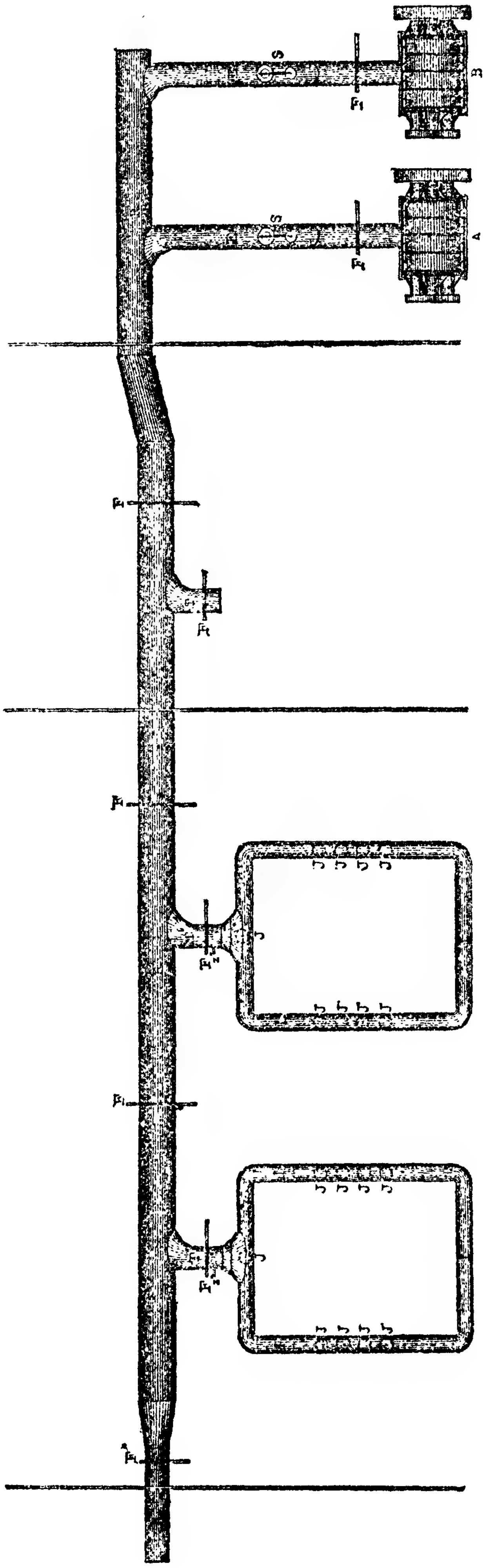

Fig. 38.—Blast Arrangement for Baker's Pressure Blowers.—Scale, 1 inch = 18 feet, $\frac{1}{216}$.

to measure the volume of air consumed by each furnace, which could be easily done by placing a meter between the damper F of the branch pipe T′ and the induction pipes of each furnace. In this way atmospheric air might be considered as one of the elements of the smelting charges, and by this means weighed or measured with as much accuracy as the fuel itself, with which it bears the closest relation.

Care must be taken to keep the blowers well oiled with a good quality of lubricating oil. It will be found advantageous to drive the blowers from a separate engine, which insures regular speed; and this engine can be attached to the same bed plate, making a very simple, compact, and convenient arrangement, dispensing with all intermediate shafting and gearing. The conducting pipes should be perfectly tight in all the joints, as defective conductors cause losses of blast by leakage. The conducting pipes should also be sufficiently large to convey the air without undue loss of friction.

Tuyeres and Nozzles.—For the purpose of furnishing the required quantity of air for the combustion of the fuel in the furnace, openings are provided in the furnaces, and iron tubes of conical shape are introduced, and the compressed air, furnished by blowing engines, is conveyed to them by nozzles. There is no special limit as to the number of tuyeres which can be laid in a furnace; they depend on the size and capacity of the furnace. Formerly only simple iron tuyeres were employed, but they have now been replaced almost entirely by the water-jacketed tuyeres. These (as shown in Fig. 39), consist of two conical pipes bound together in the front and back by means of iron rings, forming a concentric water space around the inner hollow cone. The water inlet and outlet are attached to the outer ring, the water entering by the lower pipe and escaping through the upper.

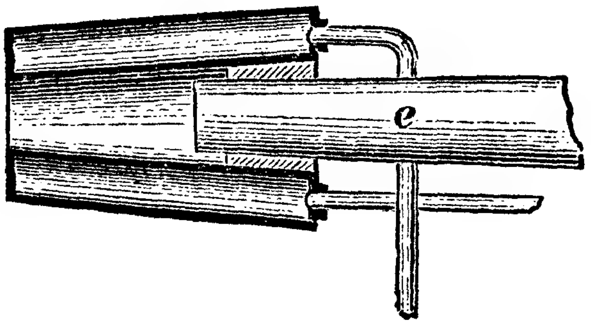

FIG. 39.—WATER JACKETED TUYERE.

Into these tuyeres are introduced the nozzles E, which are connected by canvas wind-bags with the main air conduits; and to hold them in place an iron ring, shown in Fig. 39, lies concentric with the inner cone of the tuyere.

The object in introducing the water tuyere is to prevent the burning out of the tuyere, and as the front part or smallest portion of the truncated cone is most exposed to the heat, the water inlet pipes are so arranged that the cold water discharge takes place nearest the front, as shown in Fig. 40.

It is preferable to use wrought-iron tuyeres, as those constructed of cast-iron are more rapidly corroded. Those of wrought-iron, however, are difficult to make, as they have to be welded together. Tuyeres of bronze, which are not so rapidly corroded, are now coming into use.

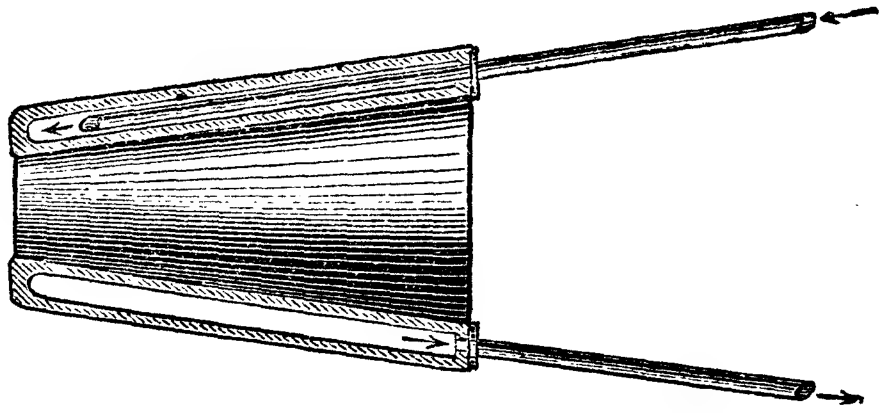

FIG. 40.—WATER JACKETED TUYERE.

The ordinary water tuyeres are so constructed that the interior or water space is inaccessible, in consequence of the back being enclosed or covered up. But in the improved form of water tuyere, which has been patented by Mr. Dodd, the back covering plate of tuyeres is removable or detachable from the body, so that scale or other accumulations deposited in the water space can be readily removed; and thus, by keeping the interior water space perfectly clean and free from deposit or other accumulations, there is little or no liability to the burning of the nose of the tuyere.

The body of the tuyere consists of the ordinary hollow shell, having the blast pipe running directly through its axis and terminating in the nose. The open back of the tuyere is provided with a detachable cap or plate, which is threaded upon the

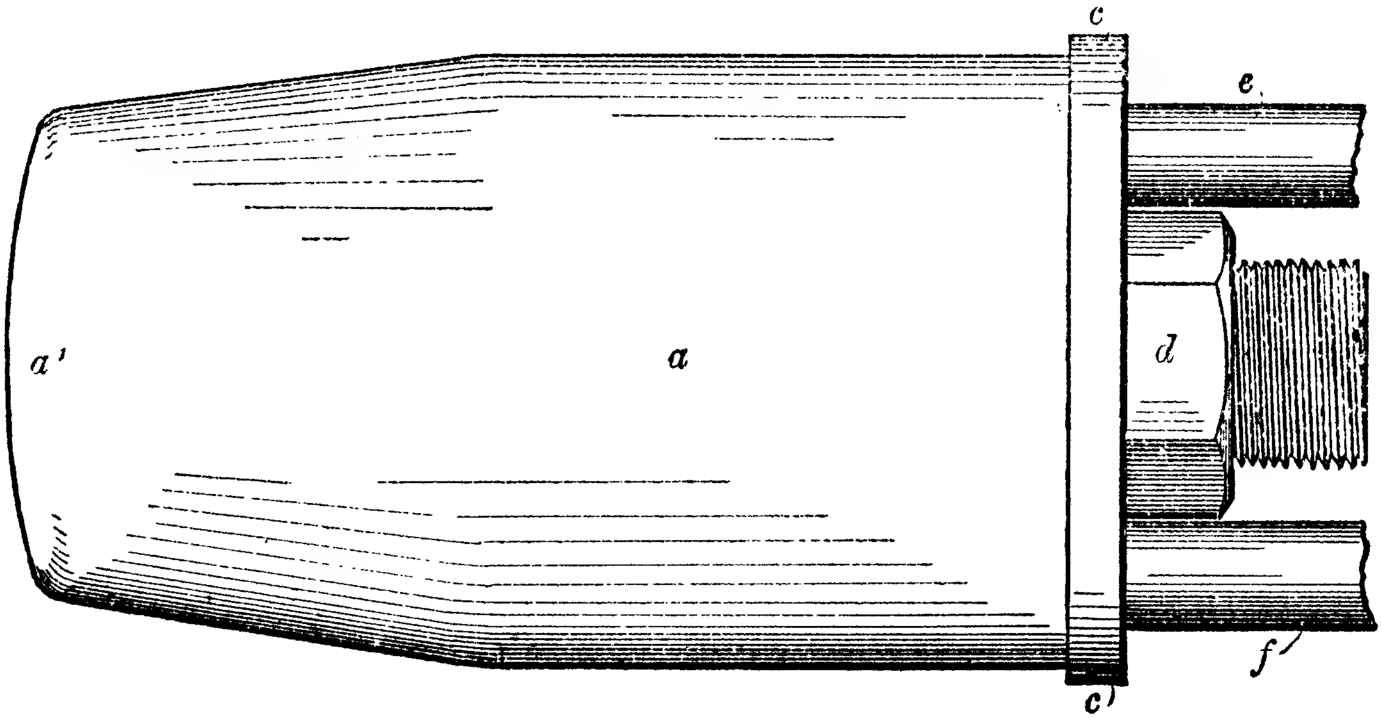

FIG. 41.—Elevation.

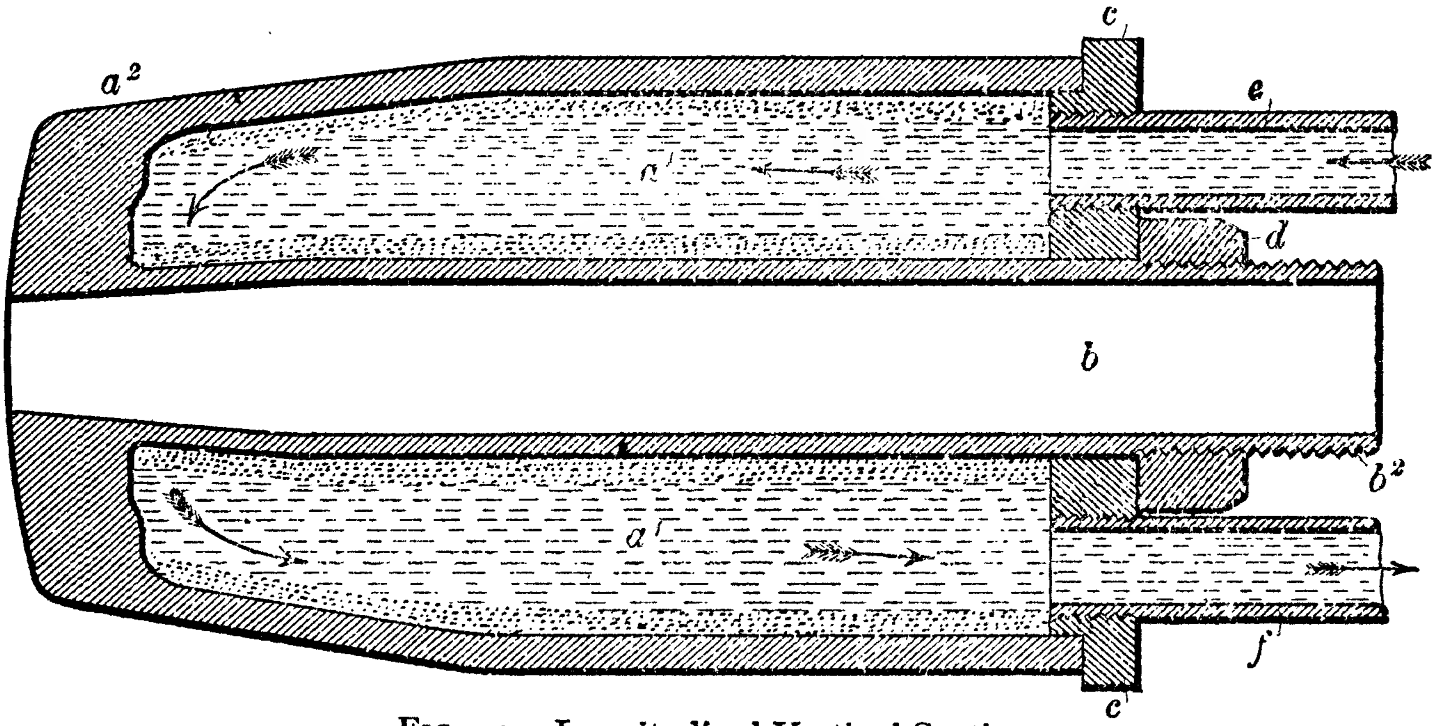

FIG. 42.—Longitudinal Vertical Section.

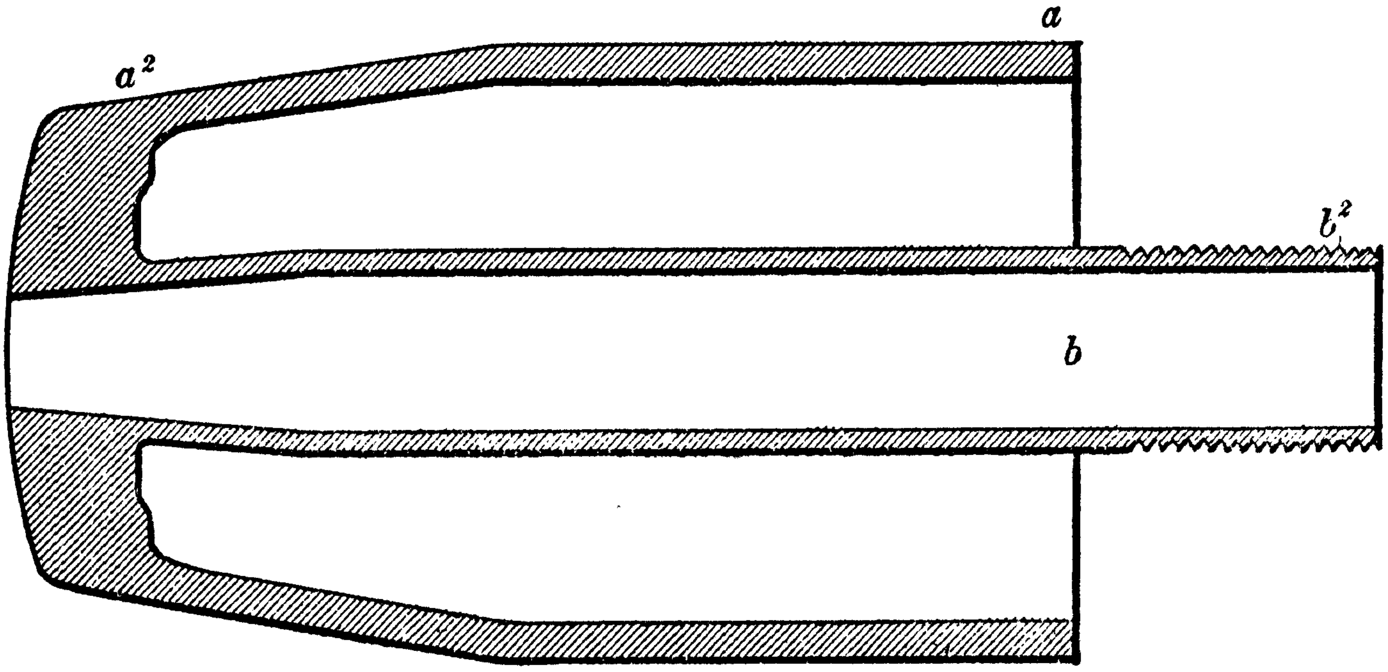

FIG. 43.—Section.

DODD'S WATER JACKETED TUYERES.

blast pipe. This detachable cap is fixed to the back end of the tuyere by means of a screw nut taking upon a thread wormed on the outside of the blast pipe. The discharge and feed water pipes are screwed into the detachable covering plate, which is situated at the back end of the tuyere. In order to produce a sound joint of the covering plate, suitable packings are interposed between the plate and the tuyere end; so that when the tuyere is in use, water passes through the feed-pipe, and from thence circulates in the interior of the water space, and is then discharged by the outlet pipe, the circulation of the water keeping the tuyere cool.

In order to examine the tuyere, the screw nut or nuts are removed from the wormed end of the blast pipe, when the back plate can be readily removed, and all scale and other scurf accumulations deposited in the interior of the tuyere removed. The plate being replaced, the tuyere is again ready for use.

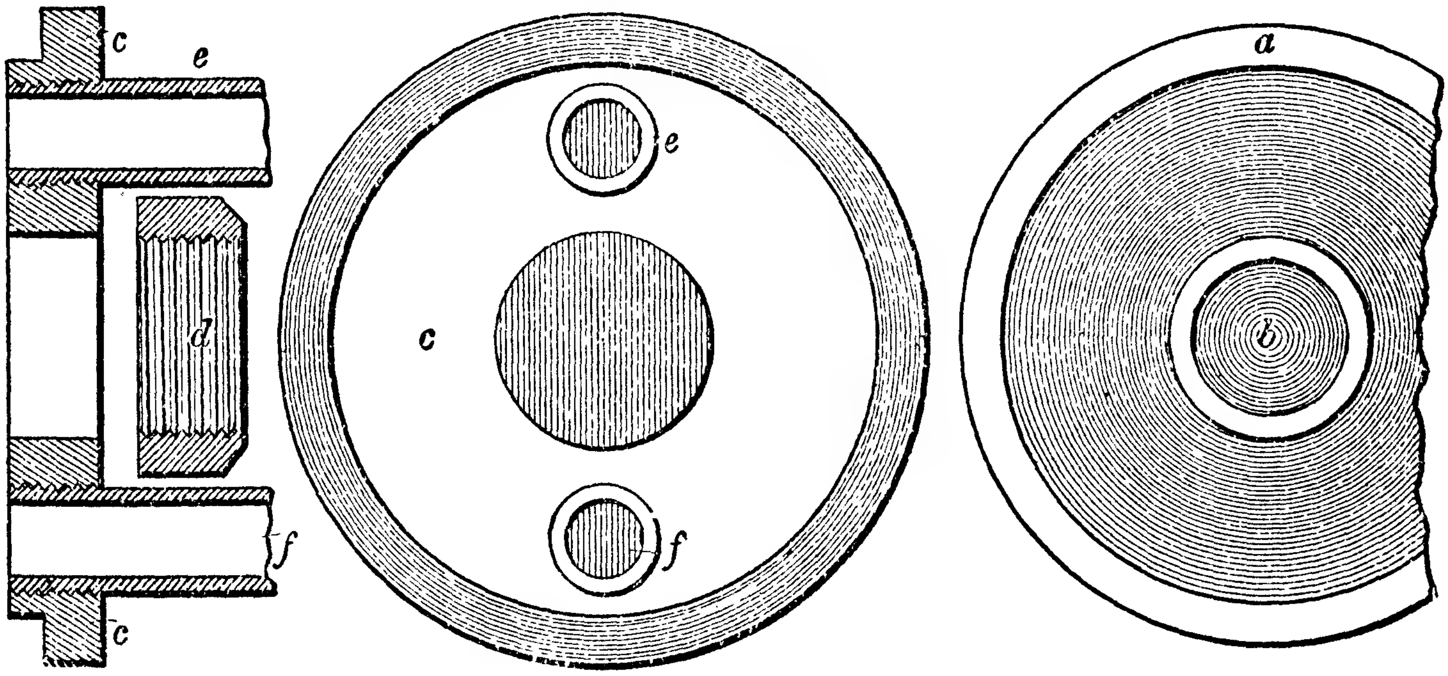

FIG. 44.—Back Plate. FIG. 45.—End View of Fig. 42. FIG. 46.—End View of Fig. 43.

DODD'S WATER JACKETED TUYERES.

Fig. 41 represents the tuyere in elevation. Fig. 42 is a longitudinal vertical section of the same, showing the back covering plate fixed in position, water being represented circulating through the said tuyere, for the purpose of keeping it cool. Fig. 43 also shows a section of the tuyere with the removable back plate detached. Fig. 44 is the removable back plate and fixing nut. Fig. 45 is an end view of Fig. 42, and Fig. 46 is an end view of Fig. 43. The same letters of reference indicate the same parts in the several figures: *a* is the tuyere and a^2 its nose, which is preferably welded to the body; the body consisting of an ordinary hollow shell, having the blast pipe *b* running through its axis, and terminating in the nose, the open back of the tuyere is provided with a detachable plate *c* which is threaded upon the blast pipe *b*. The detachable plate *c* is affixed to the back end of the tuyere by means of the screw nut *d*, taking upon the thread b^2 wormed upon the outside of the blast pipe. The discharge and feed water pipes *e*, *f* are screwed into the detachable plate.

In some water jacket furnaces the tuyere holes are cooled by the water in the jackets, and the nozzles are simply inserted in these holes.

Werner's patent tuyeres are described by Mr. Guyard, and are in use at one of the lead smelting establishments in Leadville, Colorado. They are made of cast iron, three-fourths of an inch thick, and their internal diameter is 2½ in. The system is shown in Fig. 47, as applied to the furnaces. They are divided into two parts, the nozzle N, and the elbow N′. Both the nozzle and the elbow are flanged at *r*, the flanges being faced so as to fit closely and allow no escape of blast. The nozzle and elbow are hinged at *d*, and to the nozzle are fixed three small chains, *c*, hooked to the water-jackets. By means of these the direction of the tuyere can be changed at will, so as to send the blast up and down, or right and left. At this end the nozzle terminates in a wrought-iron spherical ring or ball, which works freely in a socket of the same metal, wedged in the tuyere hole of the water-jacket. In other words, the tuyere works in a ball-and-socket joint. To stop the blast in any point of the furnace, or to observe what is going on there, the elbow is lifted, as indicated in Fig. 47. The tuyeres are connected, as usual, with the blast pipes by means of canvas wind-bags, K. When the blast is turned off for the purpose of barring down the accretions of the furnace, or clearing the hearth accretions, a piece of paper is inserted between the

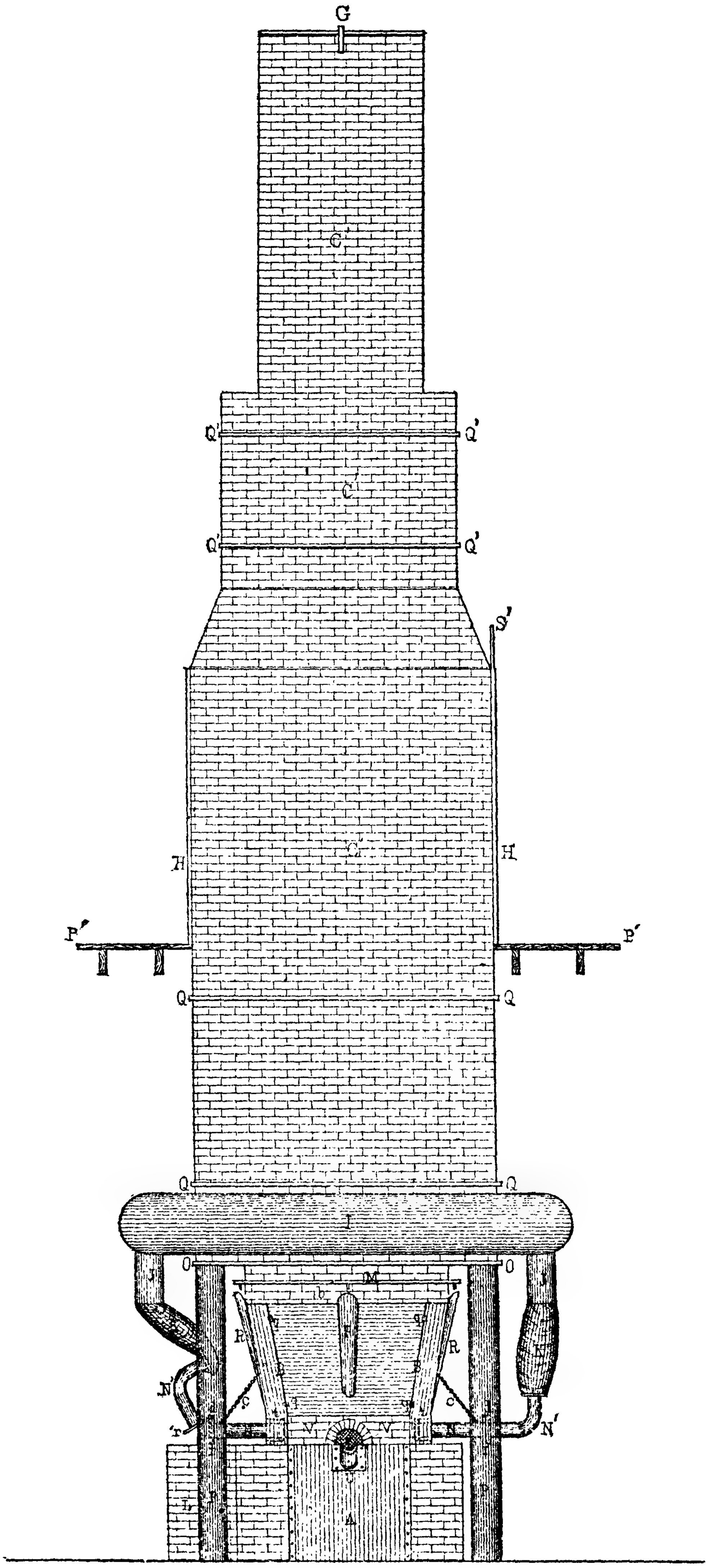

FIG. 47.—WERNER'S PATENT TUYERES.—Scale, 1 inch = 8 feet 2 inches, or $\frac{1}{98}$.

flanges *r*, and should back-flow of gases exert any pressure in the furnace, the piece of paper would burst, the elbow of the tuyere be lifted, and the tuyere would thus act as a safety-valve.

The number of tuyeres and the manner of placing them are really not of so great consequence as is generally assumed, if the proper quantity of air is introduced into the furnace and divided well in the hearth. The majority of smelters place the tuyeres only 6 in. above the level of the slag spout, and point them downward. This is very faulty in lead smelting, as it tends to concentrate the heat too far below, volatilising much metal. Placing the tuyeres too high above the slag-hole is entirely wrong, as in that case the metal in the hearth below cannot be kept sufficiently hot. Before the tuyeres the furnace temperature is highest. There the separation of the metal from matte and slag, according to their specific gravity, takes place. Below the tuyeres the temperature decreases again. If the tuyeres are, therefore, inserted too high above the slag spout, the molten masses will stiffen, and even solidify, below.

The correct way is to place them horizontally, all on the same level, and from 10 to 18 in. above the slag spout. All vertical dimensions are understood to be measured from the centre of the tuyeres. For every 1½ square feet of hearth area a tuyere of 2 in. nozzle is required.

Since the introduction of cast-iron or wrought-iron tuyeres cooled by water, the working capacity of lead-smelting furnaces has been greatly increased. Formerly only sheet iron, clay, or simply cast-iron ones were in use, giving rise to much inconvenience. In order to protect the furnace walls from the influence of the reverberated heat, the tuyere had to be provided with a nozzle of clay, or a very acid slag, protruding into the furnace. But to keep this nozzle or nose of a certain length, and to prevent it from growing or melting off, it had to be constantly watched by attentive and experienced men.

The lowest point of the hearth is from 36 to 40 in. below the centre of the tuyeres, the latter figure being the maximum. If made deeper the lead will get too cold.

The Syphon or Automatic Tap.—One of the most important improvements in the construction and working of smelting furnaces is the syphon or automatic tap, which has been devised by Mr. Arents, who for several years conducted the operations of some of the largest smelting establishments in the Western territories of the United States. The contrivance does away with the inconvenient mode of tapping formerly in use, and has proved a great success.

It consists of a sheet iron cylindrical shell, which is bolted on to one of the cast-iron plates, in which formerly one of the tap-holes would have been located, and 6 in. below the top of the plate. Through a hole in the side of this shell towards the furnace passes a 3 in. wrought-iron pipe into another hole in the furnace plate, and obliquely down to the lowest part of the hearth inside. The highest point of the pipe lies in the middle of the shell, and a foot or more below its upper rim. This cylinder is rammed full of fire clay, the pipe being meanwhile closed by a plug. A basin, 18 in. in diameter, is then cut out and the plug withdrawn. The rim of the basin is on a level, about 1 in. lower than the lowest level of the matte spout, which is from 3 in. to 4 in. below the level of the slag spout, so that the two can be drawn off separately. During the running of the furnace the lead stands always as high in this basin as in the crucible inside of the furnace.

The actual working results, since the introduction of this improvement, show that (1) the furnace runs more regularly than before; (2) the lead obtained is purer; (3) sows or salamanders are prevented; (4) the work of the smelters is lightened.

These results agree entirely with theoretical anticipations on the subject, and, without doubt, another beneficial result may be reckoned—namely, the saving of fuel.

When the usual method of tapping a lead furnace is followed, the blast is stopped and the tap-hole in the bottom of the crucible is opened (sometimes with great difficulty, when the metal has cooled in it at a former tapping). The lead, matte, and slag run out into the kettle, the hole is stopped again with clay, or a mixture of clay and coal dust, called "stubbe" or "brasque," and the blast is turned on and smelting resumed. With the cleaning of the crucible, building up of fore hearth, &c., this part of the smelting often takes considerable time, and the temperature in the furnace is reduced, so that much fuel has to be burned to make up the lost heat.

Irregularities in the running of the furnace are frequently directly traceable to this cause; and the first commencement of the formation of sows occurs also in nearly all cases during the stoppages, when the small doughy masses of metallic iron have an opportunity to stick to the bottom of the crucible, which is no longer protected by a liquid mass. It is well known to every metallurgist that whenever the foundation is laid for a sow it is extremely difficult to prevent its rapid growth; and even if the larger parts are broken or chiselled out at every tapping the iron will continually gain on the smelter.

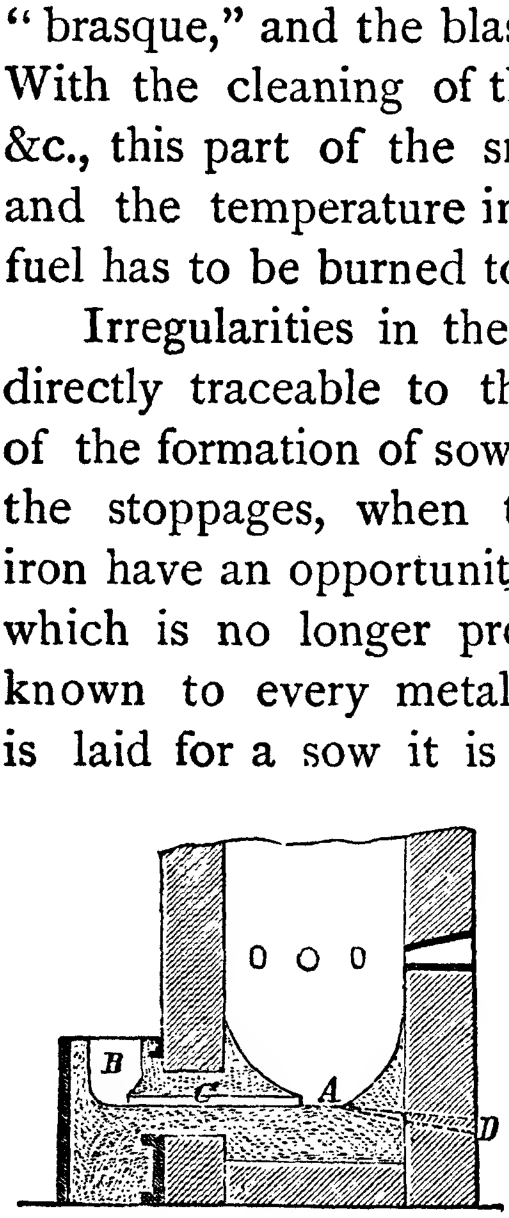

Fig. 48.—Automatic Tap.

By the employment of the automatic tap, the first formation of sows is evidently prevented. Even if there be much iron from the charge reduced to the metallic state, the lumps will not come in contact with the bottom, but will always swim on the lead bath. Being here exposed to the oxidizing influence of the blast, they will be carried into the slag.

Furthermore, this arrangement for tapping carries the molten lead out from the bottom of the blast furnace as fast as the metal is reduced inside. At the same time the lead smelted from the charge above remains in the crucible long enough to give the molten ingredients the required time to react upon each other and separate according to specific gravity.

The lead obtained must be purer, because it is taken from the bottom of the crucible, where the purest (heaviest) metal gathers, and because the foreign (lighter) metals—as iron, zinc, &c.—are kept longer under the influence of the blast, and thus are mostly oxidized and slagged. The work of the smelters is, of course, considerably lightened, because, in addition to the tapping, the hard work of removing sows, loosening the charge in the crucible after tapping, &c., &c., is dispensed with.

When a furnace is blown out, the last of the lead is drawn off through the lowest tap-hole into a basin of 40 in. diameter and 18 in. depth, at the side of the furnace opposite the automatic tap, in the same manner as in ordinary practice.

Fig. 48 shows the arrangement of the syphon tap. A is the bottom of the crucible; C the pipe which communicates with the outer basin, B, out of which it can continuously flow, or is dipped out with ladles. Opposite to C is the tap-hole D for emptying the furnace.

Erection of Old Style Furnaces.—In selecting a furnace site, many things have to be taken into consideration, in an economical as well as a technical point of view. Under the latter head three conditions are necessary—a sufficiency of water, a spacious ore floor, and a convenient slag dump. The lack of any of these conditions puts a smelter to great inconvenience, and may even cause a financial failure.

After having graded off a suitable location for a furnace at the side of a gently sloping hill, if such can be secured, a square or rectangular excavation is made in the ground to receive the foundation. The area is generally 8 ft. by 10 ft., or 10 ft. by 10 ft., the depth depending upon the condition of the adjacent ground. If this is directly on the bed rock, no foundation is required, and a depth of 3 ft. or 4 ft. is sufficient to receive the furnace-masonry proper; but if it be moist or in gravel, a depth of from 7 ft. to 14 ft. is judicious. The foundation is made of undressed rocks, which are laid in lime mortar, or better, in cement. The largest ones are used for corners, and the joints must be filled up with spalls. The topmost course, on which the furnace is to be built, ought to consist of dressed stones, well seasoned, and sandstones if possible. The joints must be perfectly tight. In some instances it is desirable to make provision for draining off the surface water by arched channels, as the furnace bottom ought to be absolutely dry.

If the furnace is intended to be provided with hearth plates, these, as well as the cast iron pillars, are to be put in place now. Then the inside of the hearth plates is carried up of sandstone blocks 2 ft. wide by 1 ft. thick, leaving sufficient room for the tap-holes and an open space at the dam-plate. In Eureka, as soon as the masonry work had progressed 7 in. above the plates, the tuyeres were placed in position and walled in with fire-brick or sandstone. Three feet above the dam-plate the arch over the breast is started, and the masonary continued to a level with the top of the pillars. Then the flange, which is to bear the upper part of the furnace, is put in its place, and well bolted to the pillars. The flange is 2 in. thick. The part of the furnace above this flange may consist of inferior sandstone, or even common brick, 1 ft. or 18 in. thick, as it is less affected by the heat and corrosive action of the ore. About 6 in. or 1 ft. above the charging floor the chimney for carrying off the fumes is started and continued to a height of from 12 ft. to 15 ft. leaving out spaces for the feed-holes, 3 ft. wide by 2½ ft. high, at the opposite walls. The chimney ought to have a sufficient opening —say 3 ft.—at the top to prevent the smoke from issuing through the feed-holes into the charging room. The use of sheet iron smoke-stacks is objectionable, as they always get red hot in the course of lighting up or blowing out a furnace, and then rapidly yield to the corroding action of the oxygen of the air.

To keep the masonry work from spreading, it is braced by a sufficient number of wrought or cast-iron uprights, which are sustained in position by wrought-iron bands passing over them. The latter are bolted together. The first bands are laid round the furnace about 2 ft. above the dam-plate, and then follow one another in spaces 1 ft. apart. At some furnaces the upper part of the furnace is bound by an iron shell.

Now the foundation is covered with soil, made firm by pounding, to within 3 ft. below the upper edge of the plates, and a track is made for the slag trucks. After having connected the tuyeres with the water tank by wrought-iron pipes of convenient size (¾ in. or 1¼ in.), the work of seasoning commences. A fire of billet wood is kept slowly and steadily increasing in the furnace for about two weeks. During that time the bolts ought to be loosened to prevent the stones or bricks from being cracked by the escaping moisture. As soon as the furnace walls get warm outside and no more moisture is perceptible in the joints, the furnace is ready for use. The fire is withdrawn, and the furnace cooled down enough to allow a man to work inside. The bottom stone, previously put in, is now provided with a thin coating of clay or brasque (a composition of powdered charcoal and clay in varying proportions), which is rammed in with a wooden stamper, after wetting it until it just coheres in lumps. The dam is made in the same manner, but of very good fire-clay, and taking care to make it extremely hard. It has a steep pitch towards the bottom. The tap-hole is made by pounding clay into the space left for that purpose, and turning a pointed stick on the outside round a central axis, thus circumscribing a cone. The tap-hole may be in the front plate, which is best, or in a side of the furnace. Generally a large furnace has two tap-holes on opposite sides, and at right angles with the front plates. One tap-hole is at the deepest point of the bottom, the other one a few inches above it. Thus the metal may be tapped high or drawn off entirely, according to circumstances.

As soon as the bottom is made the breast must be put in. About 6 in. above the front plate a straight arch of fire bricks, called the "bridge," is started. In accordance with the thickness of the breast desired, the bricks are laid lengthwise or edgewise. At Eureka the breast was made 9 in. thick, although 4 in. would be sufficient. A fire is now started in the hearth, siphon tap, and lead well to dry them. In the hearth the fire is continued till it gets red hot. This is done by filling the hearth with lump coal and kindling it. After it is all burned down the ashes are withdrawn and a fresh fire is started. These operations are continued till the desired end is accomplished, which generally takes two days.

CHAPTER V.

WATER JACKET FURNACES.

WATER JACKETS AS ADAPTED TO CUPOLA FURNACES—Circular Furnaces at Leadville, Colorado—Water Jacket Furnace according to Piltz Pattern—Piltz Furnace erected in Freiberg—Probert's Cupola Furnace—Keye's and Arents' Square Furnace—Rachette Water Jacket Furnace—The Locke Improved Lead Smelting Furnace—Oblong Water Jacket Furnace—Specification for Forty-ton Water Jacket Furnace—Specification for a Water Jacket Smelting Furnace—Capacity of Water Jacket Furnaces—Capacity of Round Smelting Furnaces—General Considerations in the Erection of a Smelting Plant.

Water Jackets as adapted to Cupola Furnaces.—The modern cupola furnaces erected in America as well as in Europe are provided with water jackets, which constitute one of the greatest improvements ever introduced in the construction of blast furnaces.

The water-jacket furnace is the result and outcome of twenty years' experience in lead smelting, and the remarkable results obtained from it regarding capacity for continuous work, minimum cost of repairs, and economic production of bullion, fairly entitle it to be considered as the most improved type of smelter now made.

The portion of the furnace which is surrounded by the water jacket is in the immediate smelting zone—namely, above the crucible. The water jacket is formed of hollow boxes, made either of cast or wrought or steel boiler plates, and in sections intercommunicating one with the other, so that there is a free circulation of water between them, and the water, therefore, is on the same level in them.

The water jacket is made in sections—two or more, according to size—so that any of them can be removed without disturbance to the rest of the furnace, making all parts accessible for cleaning out and repairs when necessary. Extra sections are provided, which can be quickly put in place in case of leakage or accidents to one of them, thus securing against any loss of time in running. When properly cared for, they never get injured; occasionally they may get shifted, or spring a leak between the joints, but this rarely affects the jackets themselves. In Colorado, smelting campaigns of over one year's duration have been carried out with water jacket furnaces, which will give an idea of the importance of this arrangement.

In the water jackets, as the water circulates freely, the temperature of this portion of the furnace wall, where the most intense heat reigns in the interior, never exceeds 60° to 70° C. As the jackets are set around the furnace in sections, this affords facility for the removal of the jackets when the furnaces need important repairs. The section disposition admits of the expansion and contraction of this portion of the furnace without altering the relative positions of the parts, which is also one of the important features of this style of furnace.

The round furnaces came out of favour, as it was found that with increasing diameter the results were unsatisfactory; the rectangular furnaces were adopted, but through Mr. Probert's innovation (described in this chapter) the limited capacity of the round furnaces has been increased.

The jackets are firmly screwed, bolted, and braced together. Each jacket is also provided with one or more circular apertures for the introduction of the nozzles of the tuyeres, and each jacket is provided with a feed funnel, forming an integral portion of the jacket, and cast or riveted to it, for the introduction of the water. The level of this feeder is higher than the upper part of the jacket, so as to fill it completely with water. Small pipes, screwed to the feeders, act as outlets for the hot water, discharging into a gutter suspended around the furnace. The water enters the jacket at the bottom and discharges on top, insuring a continual circulation.

Some manufacturers put into each section of jacket patent circulating plates, which secure a rapid circulation of water. This prevents scale forming on the inner surfaces, reduces the temperature, prevents overheating and burning out of the iron.

In some smelting works no water-jacketed tuyeres are used with the water jacket furnaces, for the reason that the water jackets act as perfect coolers of the tuyeres. A boiler iron foundation and curb are also provided, inside of which the whole structure is built. This is to prevent any escape of bullion in case of leakage from the crucible, which often occurs, involving serious loss without any means of detecting it. The arrangement of the tuyeres and the distribution of the blast are such as to avoid dead centres, secure perfect combustion and the most economical results from fuel. In the larger sizes both ends are provided with charging doors and slag discharges.

The furnaces used in the Western American smelting districts are nearly all built on the same principle, but differ as to shape. They are either rectangular or square, circular or curvilinear. Various examples of these furnaces, as seen at different smelting works, will now be described.

Circular Furnaces at Leadville, Colorado.*—These circular furnaces are constructed on the same principle as the square furnaces, differing only in that their masonry is hidden from view by a wrought-iron casing, painted black. This jacket is made of riveted wrought-iron plates about one-fourth inch thick, and is shown, J′, in the accompanying diagram, Fig. 49. The round furnaces, like the square ones (as will be seen in the same illustration), are made of two independent parts—namely, the masonry supported on a cast-iron plate, O, resting on cast-iron pillars, P; and the crucible or hearth, A, upon which rest the circular water jackets, B, made of wrought-iron plates riveted. The interval between the water jackets and the masonry is filled in with fire-brick, *b*. The main cast-iron plate support, O, is provided with a circular vertical flange, O′, and with four projecting horizontal flanges, O″, corresponding

---

* According to Mr. Guyard, "Mining Industry of Leadville."

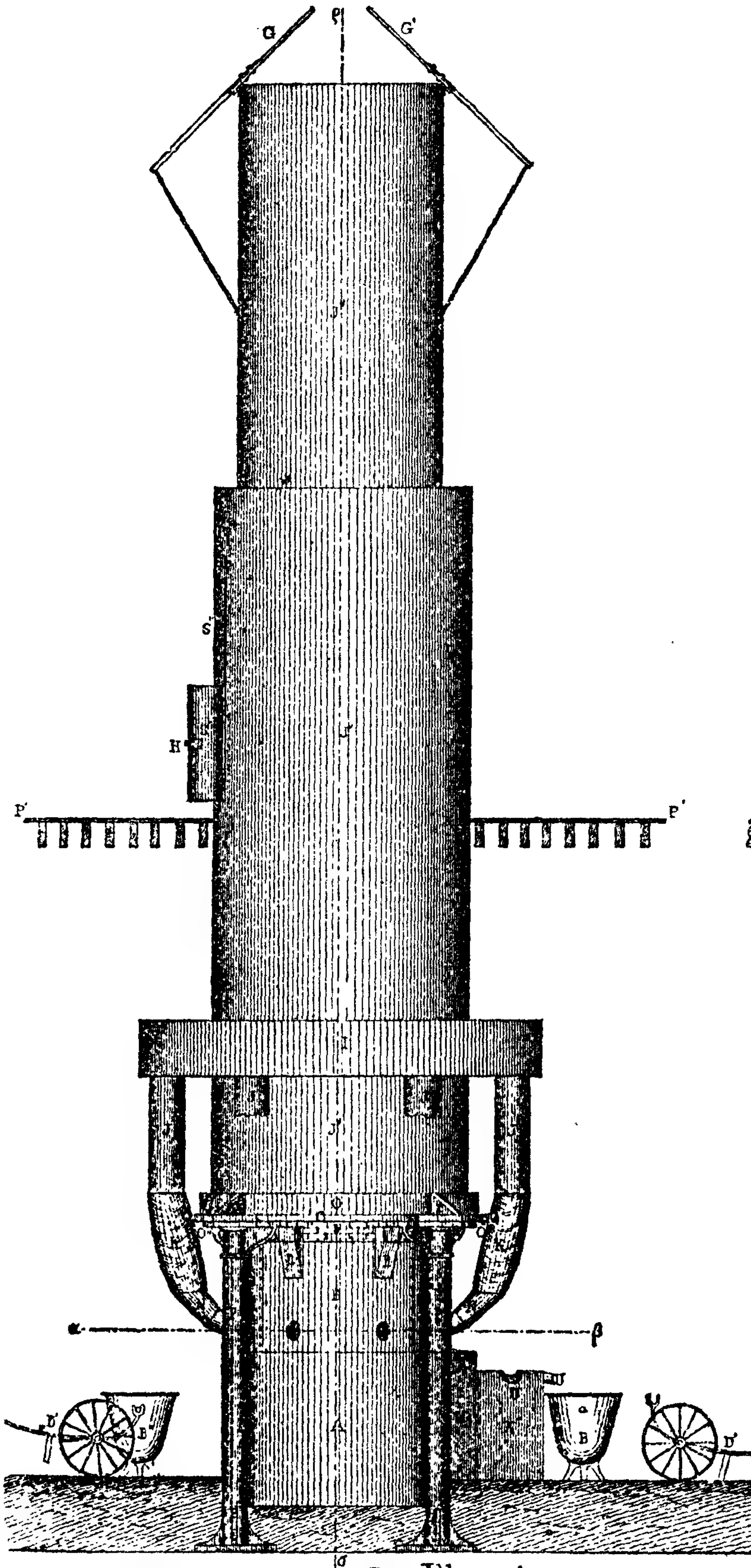

FIG. 49. Elevation.

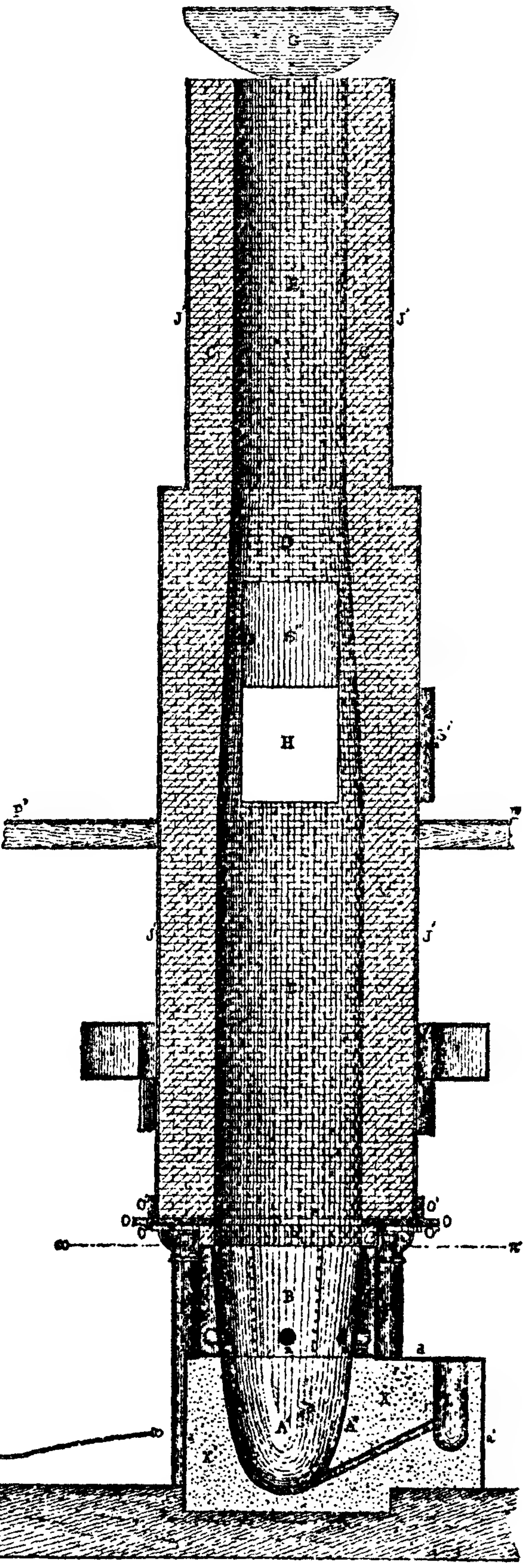

FIG. 50.—Section on ρ σ.

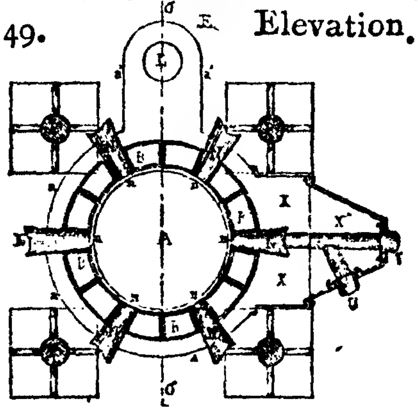

FIG. 51.—Section on α β.

Cast Iron ▨
Wrought Iron ▨
Fire Brick ▦
Steep ▩

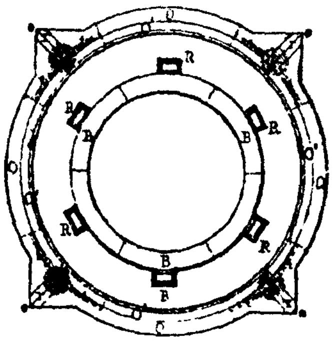

FIG. 52.—Section on ω π.

CIRCULAR FURNACES AT LEADVILLE.—Scale, 1 inch = 9¾ feet.

to the pillars. These horizontal flanges are supported by brackets, *r*; they rest on the flanges (designated also by O″) of the capitals of the pillars, supported by brackets, *t*.

The masonry jacket, J′, Fig. 50, is encased by the flange, O′, of the main cast-iron plate support, O, and rests on this plate, as does the masonry, C′. The wall, C′, is made of fire-bricks. The stack, E, a continuation of the jacket, J′, is not lined with fire-bricks. A wooden hood and chimney are placed in front of the furnace, above the slag gutters. The hexagonal induction blast-pipe, I, supplies the branch pipes, J, and the tuyeres, N, with the blast. K represents the canvas hose or wind-bags connecting the branch pipes, J, with the tuyeres, N.

The crucible, A, is very little larger than the water jackets; it is formed in strong cast-iron plates, *a*, forming segments of a circle, six in number, and firmly bolted together at the joints. The frame of the fore hearth, X, is also made of cast-iron plates, and the projection, X″, Fig. 49, of the fore hearth, which exists only in this description of furnace, is similarly framed.

The crucible, syphon tap, fore hearth, and fore hearth projection are all lined with steep, made of one part fire-clay and one part finely pulverised coke. The projection of the fore hearth is provided with two slag spouts, U. The frame of the lead pot is made of strong sheet-iron, *a′*, bolted to the cast-iron plates of the crucible. The system of water jackets consists of six jackets of equal dimensions, made of wrought-iron boiler-plates. Each jacket is provided with a feeder, R, or open spout, in which exists an outlet for the hot water, and a hole, *n*, for the introduction of the nozzle of a tuyere.

Fig. 51 shows the disposition of the six tuyeres and of the jackets; the space between the water jackets and the masonry above being filled, as already mentioned, by fire-bricks, *b*. There is only one feed-hole, H, at the throat, closed by hinged wrought-iron doors, S′ S″. The damper, G, of the stack is not single, as in most furnaces, but is made of two halves, G G′. The induction pipe, I, is made, as usual, of galvanized sheet-iron. It forms a ring around the furnace, and connected with it are the branch pipes, J.

A furnace of these dimensions smelts from 17 to 20 tons in 24 hours, and produces from 4 to 5 tons of bullion and from 13 to 15 tons of slag. The length of their run is about six months, and they are barred out every twelve hours, at the beginning of each shift. With some furnaces the slag is allowed to flow in a constant stream, and the gutter in the steep of the fore hearth and its projection are covered with live charcoal to prevent chilling of the slag. The slag pots—indicated by B B′—are independent of the car, D′, by means of which they are wheeled to the slag heap.

Water Jacket Furnace according to Piltz Pattern.—This description of furnace, an account of which has also been given by Mr. Guyard,* is shown in perspective in Fig. 53, and in vertical section in Fig 54.

In Fig. 53 the crucible, A, with its frame of cast-iron plates, as well as the frame of the lead syphon tap, L, and of the fore hearth, X′, is clearly seen. The cast-iron pillars, P, with their capitals and brackets and the two slag gutters, U, are visible. Likewise the riveted wrought-iron boiler-plate water jackets, B, the fire-brick breast, V, and the tymp stone and tap hole, Z. The main cast-iron support, O, with its vertical flange, O′, supported by the brackets, *r*, the induction pipe, I, and the wrought-iron casing, J, around the masonry, are also visible.

In Fig. 54 the steep lining of the hearth and fore hearth, X′, the space, *b*, between the water jackets and the masonry, filled with fire-brick, and the fire-brick lining, C′, of the furnace are shown.

Fig. 54 shows also another arrangement for the tapping of slag. The slag runs into a cast-iron slag pot, V′, provided with a spout, U′, and live charcoal in large pieces is kept over the molten slag to prevent it from cooling. Any bullion mechanically carried away falls at the bottom of the pot, V′, which is cleared of its contents from time to time. The slag thus freed from bullion runs into the ordinary slag pot, B′, mounted on wheels. This arrangement is evidently an excellent one, but is

---

* Report on the "Mining Industry of Leadville."

only necessitated by some defect in the lining of the dam, for in well-lined furnaces no bullion can escape, thus rendering the

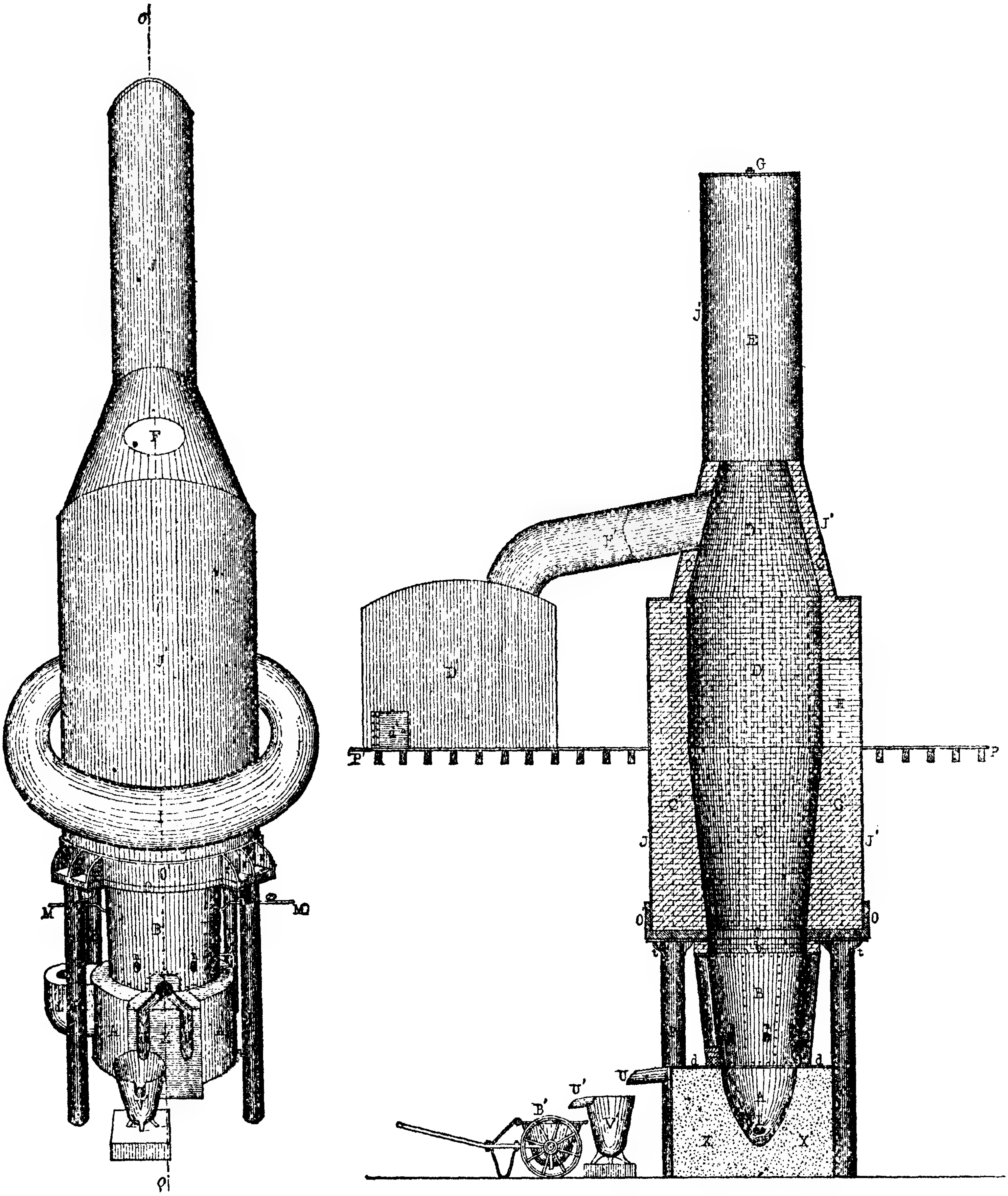

FIG. 53.—Perspective View. FIG. 54.—Section on ρ σ.

PILTZ FURNACE.—Scale, 1 inch = 7½ feet.

use of an intermediary slag pot unnecessary. This is proved by the fact that slags never contain any metallic grains, no matter from what part of the cake the specimen is taken.

By means of the sheet-iron flue, F, of the chimney, E, furnace connection is made with the sheet-iron chamber, D′, resting on the feeding floor, P′, used to catch lead dust. At *d′* is seen one of the doors of this chamber, through which the dust is extracted.

These furnaces are worked with six tuyeres, 2½ in. at the nozzle, and their smelting capacity is from 16 to 18 tons of ore for 24 hours per furnace.

Piltz Furnace erected in Freiberg.—This furnace is shown in Figs. 55 and 56, the former of which is a perspective view, and the latter a section. From Fig. 56 it will be seen that the hearth bottom consists of four courses of bricks, the two lower courses being common red brick, the upper ones fire-brick. The brickwork rests on a circular plate of cast iron 1 ft. 4 ins. thick, and is encased with boiler-plate in several segments riveted together, the casing being further strengthened externally by two strong hoops of wrought iron.

Above the hearth bottom are two annular courses of fire-brick forming the inner and upper part of the hearth. On top of this brickwork rests the water jacket of wrought iron, *gg*. Above the water-jacket are courses of fire-brick at the boshes; followed by courses of fire-bricks forming the shaft. *l l* are the tap holes; each furnace has four tap holes. *k*, cast-iron spout for the overflow of the slag; *ff*, blast pipes, the horizontal portions of which can be moved to and fro in the tuyere holes by means of two small handles, the positions of which are indicated by short lines in the section 56; and there is also a sliding screw arrangement by which the vertical portion of those pipes may be moved up and down as shown in Fig. 55.

There is a cast-iron flanged ring riveted to the outer shell, and intended for the support of the shaft during the reparation of the lower part of the furnace. *e e* is the main induction pipe. Above the induction pipe is seen a double ring of E and L shape, riveted to the outer casing by means of brackets and supported by cast-iron pillars; *d d* are the four pillars supporting these rings; *a*, is a cast-iron cylinder, flanged at the top, inserted in the mouth of the furnace in order that the waste gas and fume may be drawn off; *b*, flue pipe, for drawing off and conveying the waste gas and fume to the condensing chambers which communicate with a chimney; *c*, outer casing of heavy sheet iron for upper part of furnace; *h*, pipe for supplying cold water to jackets and distributing pipes; *i*, the discharge pipe from jackets.

Probert's Cupola Furnace.—An important improvement in the construction of water-jacketed furnaces has been made by Mr. Ed. Probert, managing director of the Richmond Consolidated Mines at Eureka, Nevada, which is by far the greatest advance in the economical treatment of lead ores yet made on the Pacific Coast, and its importance warrants a full description of the improved furnace, as described by the inventor.

The principal advantage of Mr. Probert's improvements consists in the arrangement and construction of the tuyeres, allowing of a large increase of the smelting capacity of the furnace. He has also modified the water jacket around the smelting zone, by surrounding the region of fusion with what he calls a *hydrocycle*, consisting of a circular series of independent and separately removable water cells suitably joined. Some minor details in the construction of the ordinary water jacket furnaces have been also altered by him, and prove advantageous in practical working. The manner of preparing the foundation, arranging the tuyeres, the shell, and the support, contribute greatly toward the perfection of the furnace.

Fig. 57 is a perspective view of the furnace; Fig. 58 a vertical section on the line *x x* of Fig. 59; and Fig. 59 a horizontal section, the upper portion (marked 1), being one-half of the circumference of the furnace, taken on the line *y y* of Fig. 58; while the lower portion (marked 2), the other half of the furnace, is a section on the line *z z*, Fig. 58. Fig. 60 is an enlarged perspective view of one of the cells or compartments of the hydrocycle and a portion of another, showing the means for securing them together. Fig. 61 (p. 115) is a vertical longitudinal section showing the long tuyeres, P.

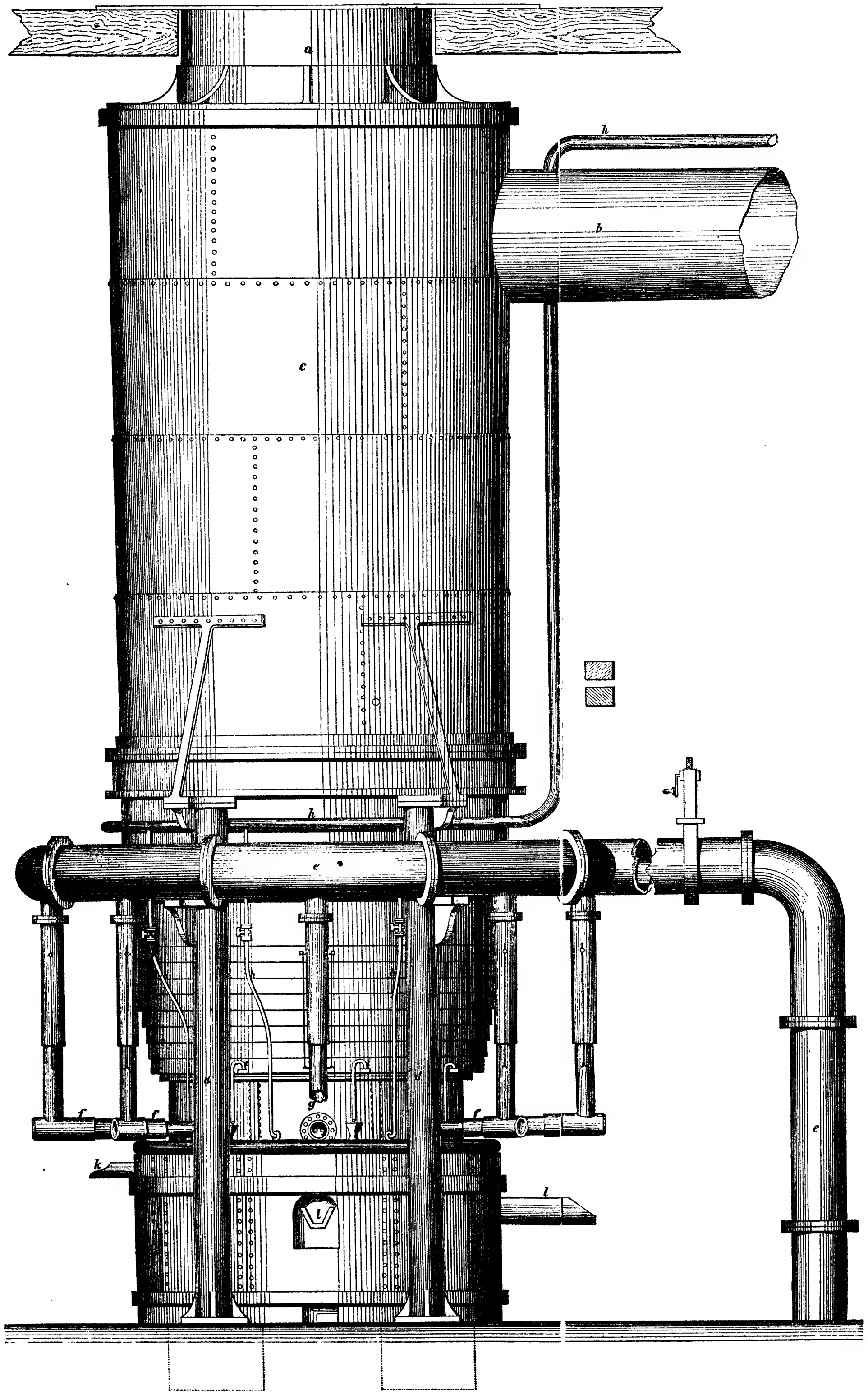

Fig. 55.—Piltz Furnace at Muldner Hütte, Freiberg.
Scale, 1 inch = $3\frac{3}{4}$ feet.

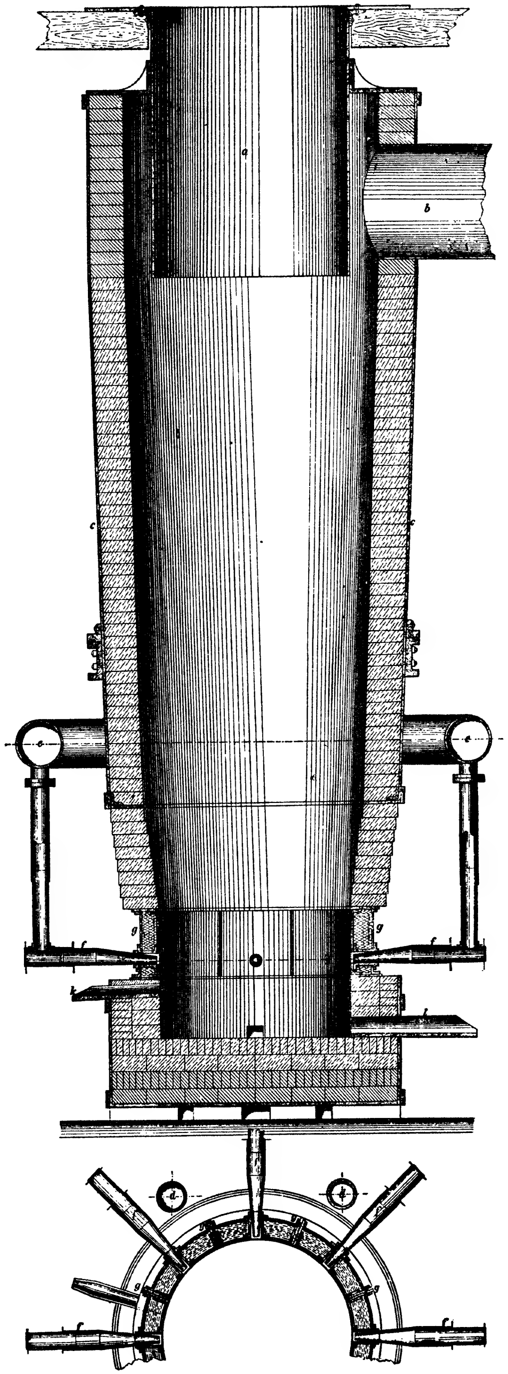

Fig. 56.—Piltz Furnace at Muldner Hütte, Freiberg.
Scale, 1 inch = $3\frac{3}{4}$ feet.

To face p. 108.

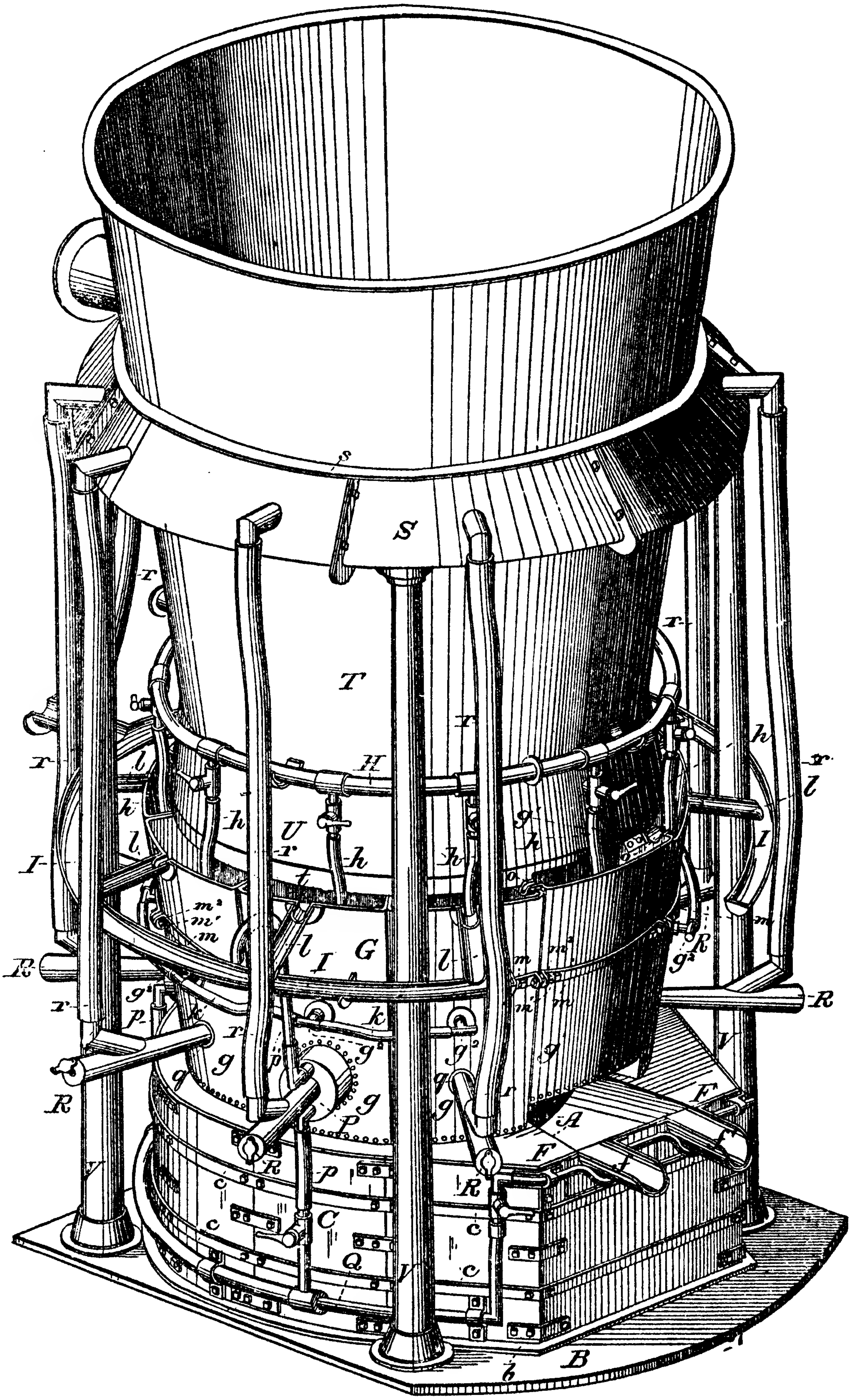

FIG. 57.—PROBERT'S CUPOLA FURNACE.—Perspective View.

The special advantages of this furnace are its large smelting capacity, the facility with which it can be repaired even while in operation, and the facility, generally, with which the entire operation may be carried on.

The first of these advantages arises from overcoming the disadvantages in the ordinary furnaces. It is well known that in the construction of pressure blast furnaces of the ordinary type the diameter should never exceed twice the "throw" of the blast—that is, twice the distance to which the blast penetrates the charge, or say from 30 to 40 in. This necessity limits the smelting capacity of the furnace, so that the daily production rarely exceeds from 20 to 30 tons. Mr. Probert's improvements render it possible to increase the diameter of the furnace, and therefore its productive or smelting capacity, more than twofold, without materially increasing the cost of construction, while the running expenses are reduced to a minimum.

The second advantage arises from the peculiar construction of the hydrocycle, the elements or independent cells of which are so fitted to place and united as to render it possible for each to be cleaned while in place, or taken out for repairs while the furnace is in actual operation, with the least possible difficulty in the shortest length of time.

The third advantage results from the general construction of all the parts, and will be better understood as the description progresses.

The bottom of the furnace consists of a circular wall, A, of fire-rock or fire-brick, the top of which rises 3 ft. above the level of the smelting floor, and is carried downward an equal distance below the surface of the earth or floor, where it rests on a cast-iron foundation plate, B, 2½ in. thick, and having a curb, *b*, running round its edge, which holds in position a series of curvilinear cast-iron slabs, C, each 6 ft. in height, 3 ft. in curvilinear measurement, and 2½ in. thick. These are bolted and clamped together at their upper ends, and further strengthened by having two strong circular iron bands, C, passed completely round them, so as to form an envelope around the masonry or fire-brick wall. Within this wall is formed the smelting hearth or crucible, D, of the furnace (containing, usually, from 10 to 15 tons of red hot lead), which is constructed of the usual refractory furnace materials, consisting of fire-bricks, fire-clay, sand, and brasque, out of which last

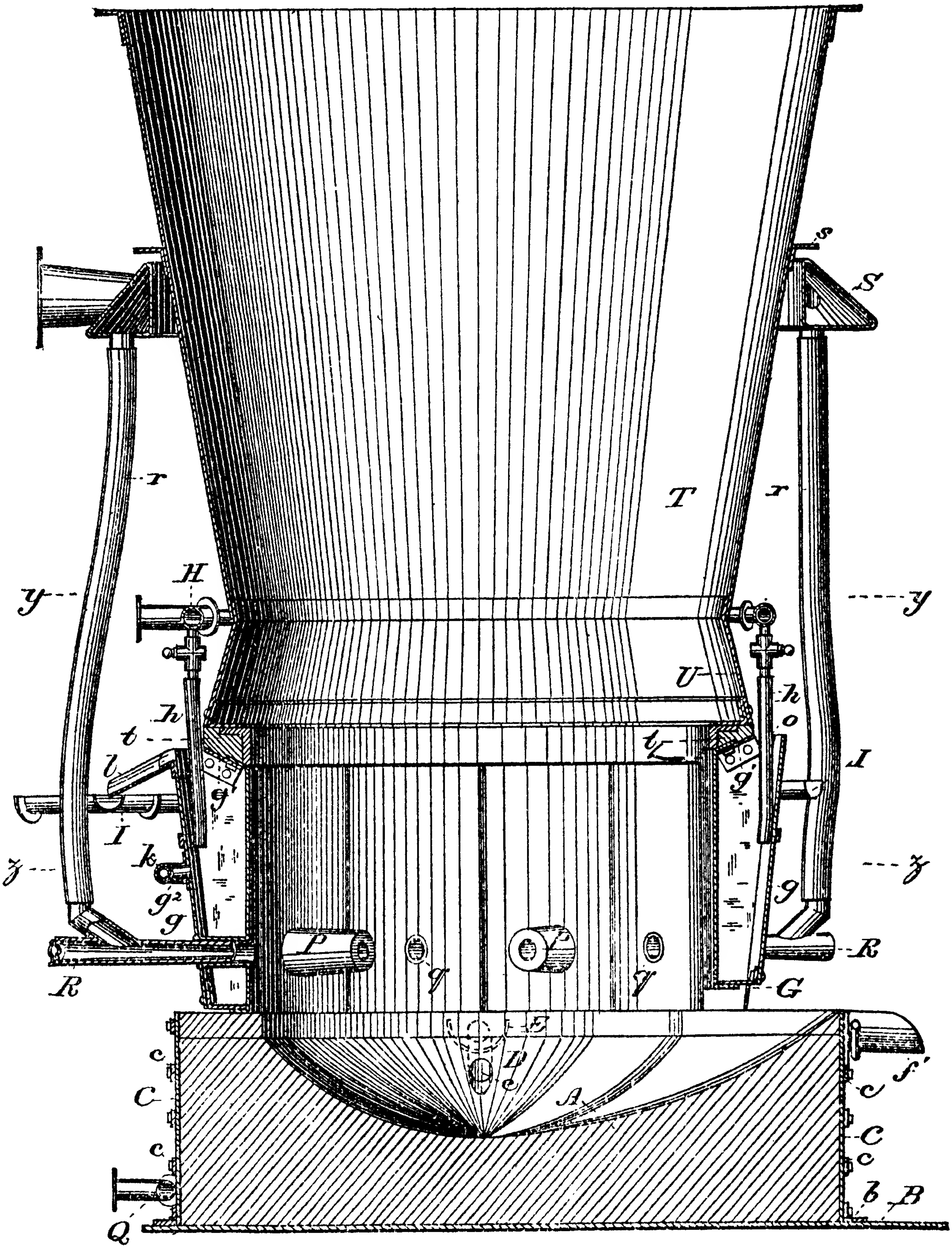

FIG. 58.—PROBERT'S CUPOLA FURNACE.—Vertical Section.

material the upper surface of the crucible is moulded, so as to assume a bowl-shaped form to hold the lead.

A 2-in. hole, *e*, having a spout, E, at its upper and outer end, is drilled obliquely downward from the outside of the furnace through the iron casing, the fire-brick wall, and the composition within, so as to strike the bottom of the bowl-shaped cavity, and through this the red-hot lead rises under the pressure of the charge, and the accumulating metal when the furnace is in action, till it runs out at the spout, and is received in a pot placed beneath. The chief novelty in this lower part of the furnace (or base) is the working front, F, the shape of which is obtained by drawing two tangents to the circle of the base at the extremities of its front quadrant, extending them until they meet, and then truncating the right angle formed at such a distance from the angle as will give a working front of about 3½ ft. long, projecting outward about 1 ft. beyond the general curvature of the base.

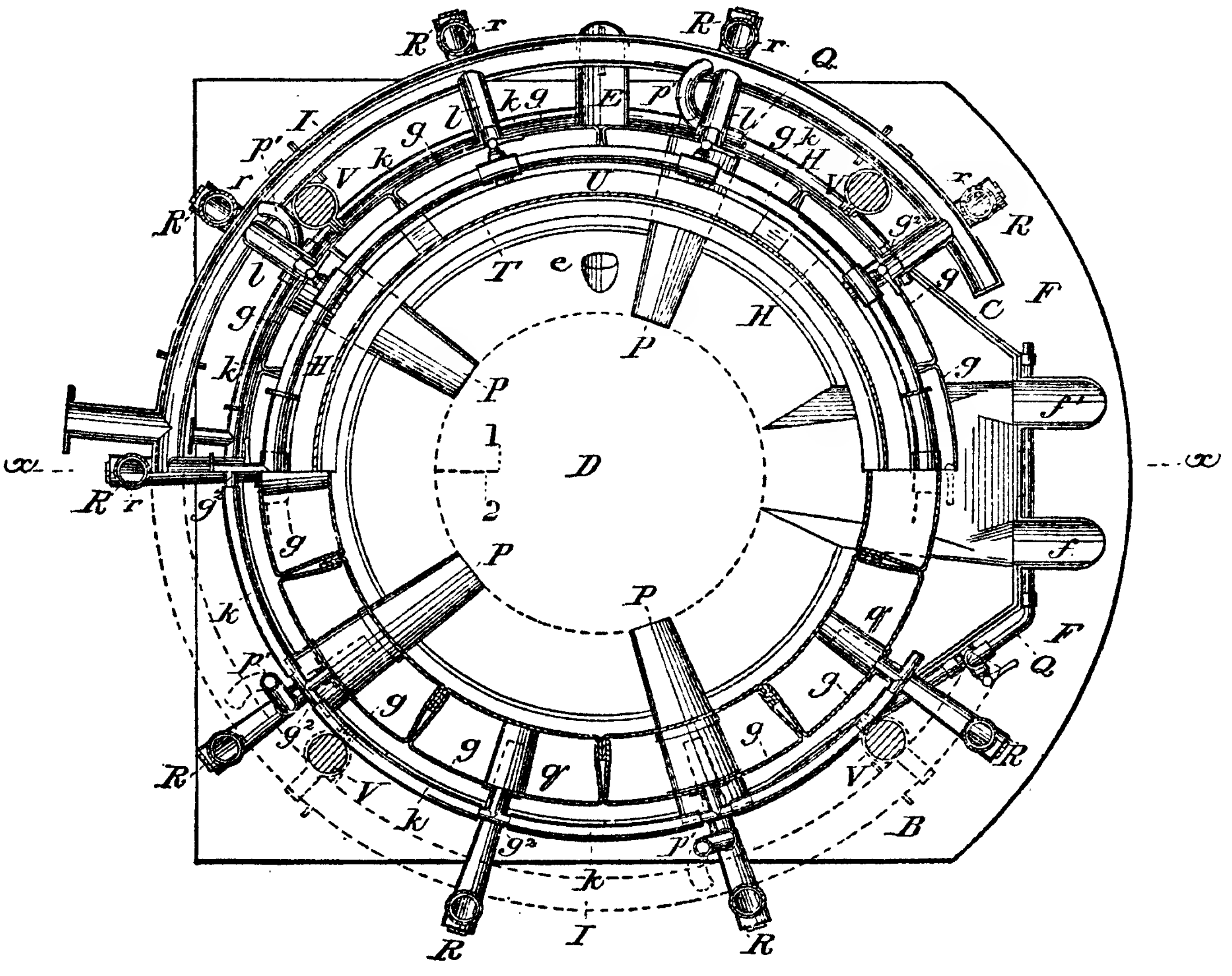

FIG. 59.—PROBERT'S CUPOLA FURNACE.—Plan or Horizontal Section.

The general form thus obtained, though departing very little from that of a circle, is much more convenient in use, the projecting front giving the extra depth required for working the furnace, and offering special facilities for affixing and changing the slag spout, *f*, and speiss or matte spout, *f′*. This peculiar form of working front is also advantageous in that it allows greater facility in bracing the entire wall, as the encircling strips curve to a better advantage, and bind the whole in a better manner, than if a straight projecting front were used.

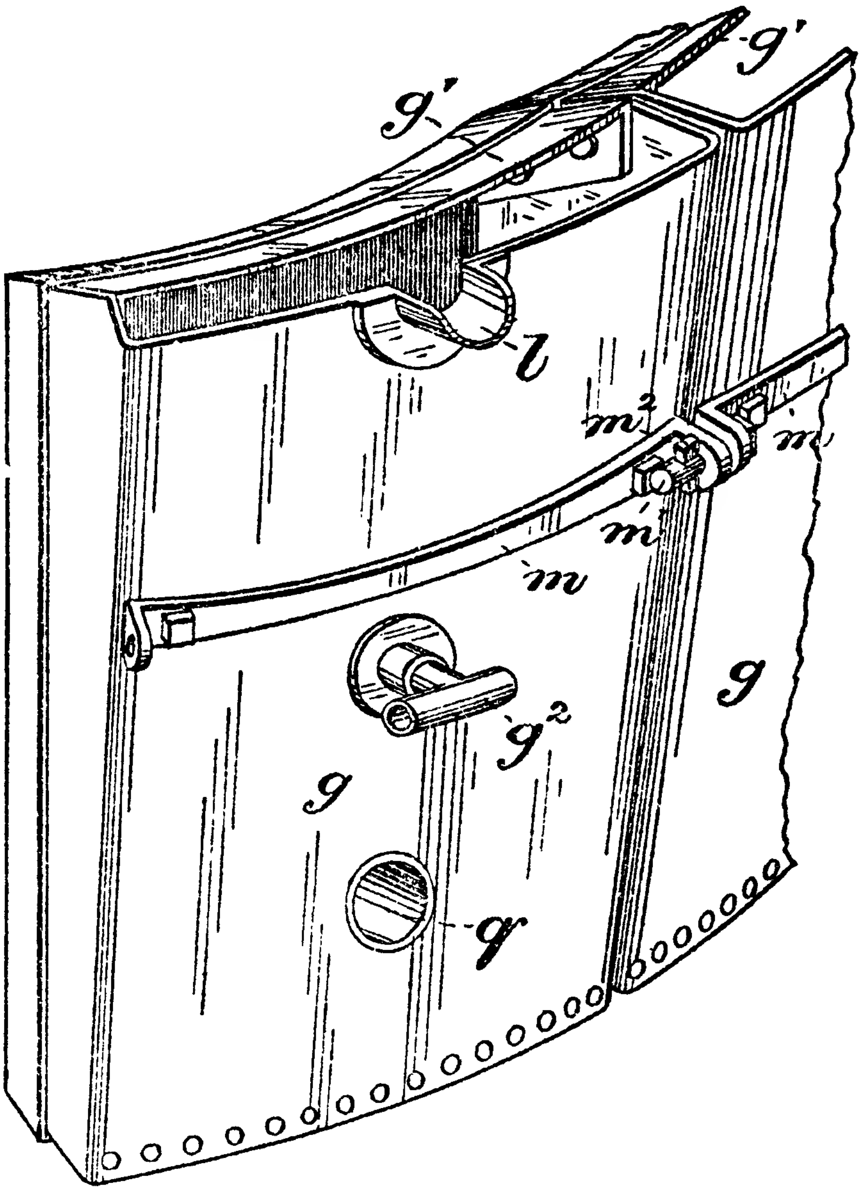

FIG. 60.—PROBERT'S CUPOLA FURNACE.—Sectional Water Jacket.

Resting upon the upper rim of the wall of fire-rock or brick is the hydrocycle, which is designated as an entirety by G. It consists of a series of (nine, more or less) independent water-tight iron cells or compartments, *g*, of curvilinear form, locked rigidly together by means of bolts and cutters (in a manner presently to be described), so as to form an annular cellular trough, through which the water circulates, entering under pressure near the bottom of each cell, through pipes, *h*, from an encircling supply pipe, H, above, and being discharged over the top edge of the outer side of each into a launder or gutter, I, passing around the furnace.

The special details of construction of the several segmental compartments of the hydrocycle to be pointed out, and the manner of bolting them together, are as follows:—Each segment is constructed, preferably, of three-eighths-inch boiler-plate, the sheet forming the inner wall being of the best flange-iron, capable of having its four edges turned back all round to the depth of 3 in. at least, to receive the single curved piece forming the front and sides, the bottom piece, and the apron or top piece, g', which is applied at a considerable slope toward the interior of the furnace and only partly closes the top, whereby a space 4 in. wide and running the full length of the compartment is left open for cleaning it out from time to time and removing the "fur" apt to be deposited by the water, Fig. 60. The several sheets are riveted together, so as to form a curvilinear segmental water-tight cell, about 3 ft. deep, 2 ft. in circular outside measurement, and 1 ft. between the inner and outer walls at the top, tapering downward to 8 in. at the bottom. Each segmental cell is provided with a T-pipe coupling, g^2, on the outside, by means of which a tubular connection, *k*, may be made between the cells, thus insuring a constant level and free circulation of the water in and through all the cells. Each cell is further provided with a lip or spout, *l*, through which the overflow or waste water passes to the launder.

In order to connect the several segmental cells together and form the rigid trough or hydrocycle, a flat bar of iron, *m*, about 3 in. wide and 1 in. thick, is bolted horizontally on the outer side of each, following its contour. The ends of the bars are turned outward 2 in. at a right angle, and a hole is made in each to receive an inch-bolt, m', which is slotted to receive in its turn a "cutter," or wedge-shaped key, m^2, Fig. 60. When these several cutters or wedges are driven home, the ends of all the short curved bars are forcibly drawn toward each other, and the bars united into a circle, which, tightening on the water compartments, locks them securely together, forming a rigid whole, the hydrocycle having the form of a frustum of an inverted hollow cone, the interior surface of which has a slope of about 1 in 8, corresponding to the general interior slope of the furnace.

The cutters and bolts being removable at pleasure, any compartment of the hydrocycle can be readily detached and withdrawn from its place, in case of its leaking or needing repairs, and another substituted for it, without disturbing the rest, the whole operation not occupying more than half an hour, instead of causing the loss of entire days and necessitating the suspension of smelting operations.

That compartment of the hydrocycle which faces the working front of the furnace does not extend downward as far as the rest, a space of about 6 in. being left beneath it to allow of the raking out of the scoria occasionally from the interior. Moreover, this particular compartment, instead of resting on the masonry of the lower part of the furnace, like the rest, is suspended between the two adjoining ones at a slightly higher level by the two overflow spouts, *o*, with which it is provided, and by which also it discharges the waste water into the two adjoining compartments, instead of into the launder, which it is not found convenient to carry completely round the working front, Fig. 57.

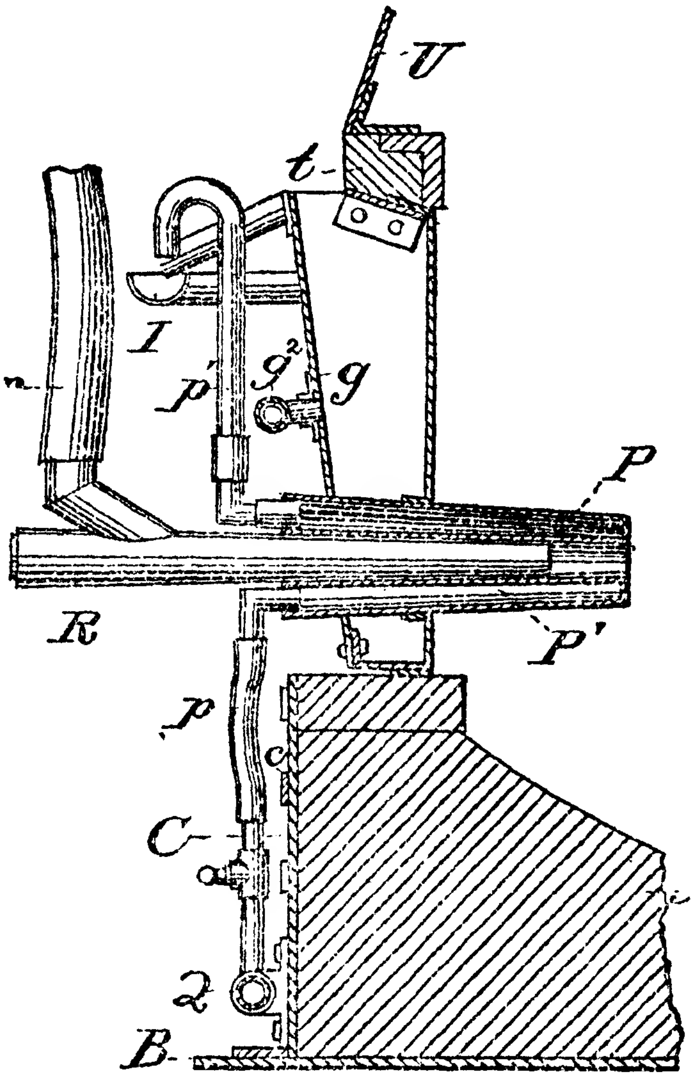

FIG. 61.—PROBERT'S CUPOLA FURNACE. Tuyeres.

Through certain of the cells of the hydrocycle are inserted the long blast-tuyeres, P, consisting of pipes having a surrounding water jacket, P′, in which a constant circulation of water is maintained by means of the short feed-pipes, *p*, supplied from a pipe, Q, below, and the discharge-pipes, *p′*, emptying their contents into the launder. These tuyeres project into the furnace 2 ft. or more, or as far as the dotted circle in Fig. 59, which may be taken as representing the sectional interior of a circular blast furnace of average size—or, say, 36 in. in diameter.

By projecting a tuyere through the lining of the furnace and into its region of fusion the diameter of the furnace can be increased, but in order to maintain such an inwardly-projecting tuyere it must either be of material refractory enough to withstand the heat, or it must be a water-tuyere. The latter is preferable, but with such a long tuyere, and with so much weight on its inner end, it becomes essential to provide a firm support in the body of the furnace through which it passes. If it passed through the ordinary shell of the furnace, whether lined with refractory material or not, it would soon lose its support by reason of burning away of the refractory lining, and the inner end of the tuyere would soon fall out of position; but this danger is avoided because the water-jacket withstands the action of the heat, and there remains a firm support for the inwardly projecting tuyere—an important feature in this furnace.

Through the remaining cells of the hydrocycle are let short blast-tuyeres, *q*, which do not project within the furnace at all, Fig. 59.

R are the blast pipes having their nozzles inserted in the open centre of the long tuyeres P and in the short tuyeres *q*. These are supplied with air under pressure through the flexible pipes or tubes *r* from a wind-chamber, S, above.

For the short tuyeres, *q*, the water-cells of the hydrocycle serve as water-tuyeres, so that they will not be burned out.

It will be perceived that the air entering the furnace through the long tuyeres will be discharged within the area of the dotted circle, while that entering through the shorter ones, *q*, will be discharged within the curvilinear spaces lying between the several pairs of long tuyeres and the sides of the hydrocycle. While, therefore, the former set of tuyeres supply air for the smelting of the portion of the charge lying within the area of the dotted circle, the latter set, opening directly on the inside of the several compartments, convey it to the portions lying within curvilinear spaces immediately in front of them, and thus the complete combustion of the fuel is insured over the whole area of the furnace, and the effect of two furnaces working, as it were, one within the other, is produced. It will be readily seen from this that the capacity of the furnaces is largely increased.

It only remains to describe the shell T, or upper portion of the furnace, which has the shape of a truncated inverted cone, and which rises about 12 ft. above the hydrocycle to the feed-floor above (where it receives the ore and fuel—the charge), and is surmounted by a dome and stack leading to the flue, but these parts are not shown in the cuts. The outer tunic or casing of this shell is of one-eighth to three-sixteenths inch sheet-iron, and the lining of common bricks for a distance of 2 ft. from the bottom, where the shell takes a reverse slope (designated by U) to the top of the hydrocycle, and for this portion fire-bricks are used. The shell is supported indirectly by cast-iron pillars V, and no part of the weight is borne by the hydrocycle, which is left perfectly free, a space being left in which a layer of brick, *t*, supported upon the apron of the water-cells, is placed, Fig. 57.

The novelty to be noted about the upper part of the furnace is the wind-chamber, S, which instead of being made of thin galvanized iron or zinc as is usual, and serving merely for the distribution of the blast, is made of iron-plate, or stout sheet-iron, or cast-iron, and converted into a hollow girder, in section a right-angled triangle, which, encircling the shell beneath a flange, *s*, receives its weight, and transfers it to the cast-iron pillars, upon which it rests and which rise from the foundation-plate. By thus making the girder triangular instead of rectangular sufficient strength is obtained with very much less material.

This girder wind-chamber receives the blast from suitable blowers through a 10 in. aperture and distributes it to the blast pipes or tuyeres.

The water which is supplied to the tuyeres and hydrocycle becomes boiling hot, and usually deposits a considerable amount of calcium sulphates and carbonates on the inner surface, which tends to cause the iron to burn out; and hence the great importance of leaving the water-cells open at the top, so that the deposit or fur from the water may be readily removed.

The advantage gained by the reverse slope U of the shell is that it gives an enlargement for the expansion of the gases from the charge, and more time is gained for their proper operation.

As the ore or charge lies in the throat, it is compact, but lower down the gases have a better opportunity to get at all the particles.

The furnace thus far described is of circular form, and of the diameter of 7 ft., and is capable of smelting from 50 to 60 tons of ore daily; but the principle explained by which the capacity is increased is applicable to the construction of a still larger furnace. For retaining the diameter of 7 ft. (which has been found the most advantageous in practice), all that is necessary is to separate the two semicircles into which the plan of the hydrocycle may be supposed to be divided by a space, say, equal to the semi-diameter of the furnace, or 3½ ft., and then to introduce into the openings on either side a pair of additional cells of rectangular shape (not curvilinear), when the furnace will be converted into an oblong one with circular heads, or ends capable of smelting from 80 to 100 tons daily, which is the capacity of one now in actual use, and which has even exceeded the highest production named.

Keye's and Arents' Square Furnace.—This patented furnace differs from the other furnaces of similar construction, in that the lead well L, Fig. 64, does not project outside of the crucible frame, but together with the crucible, is confined within the frame formed by the hearth-plates. Fig. 64 is

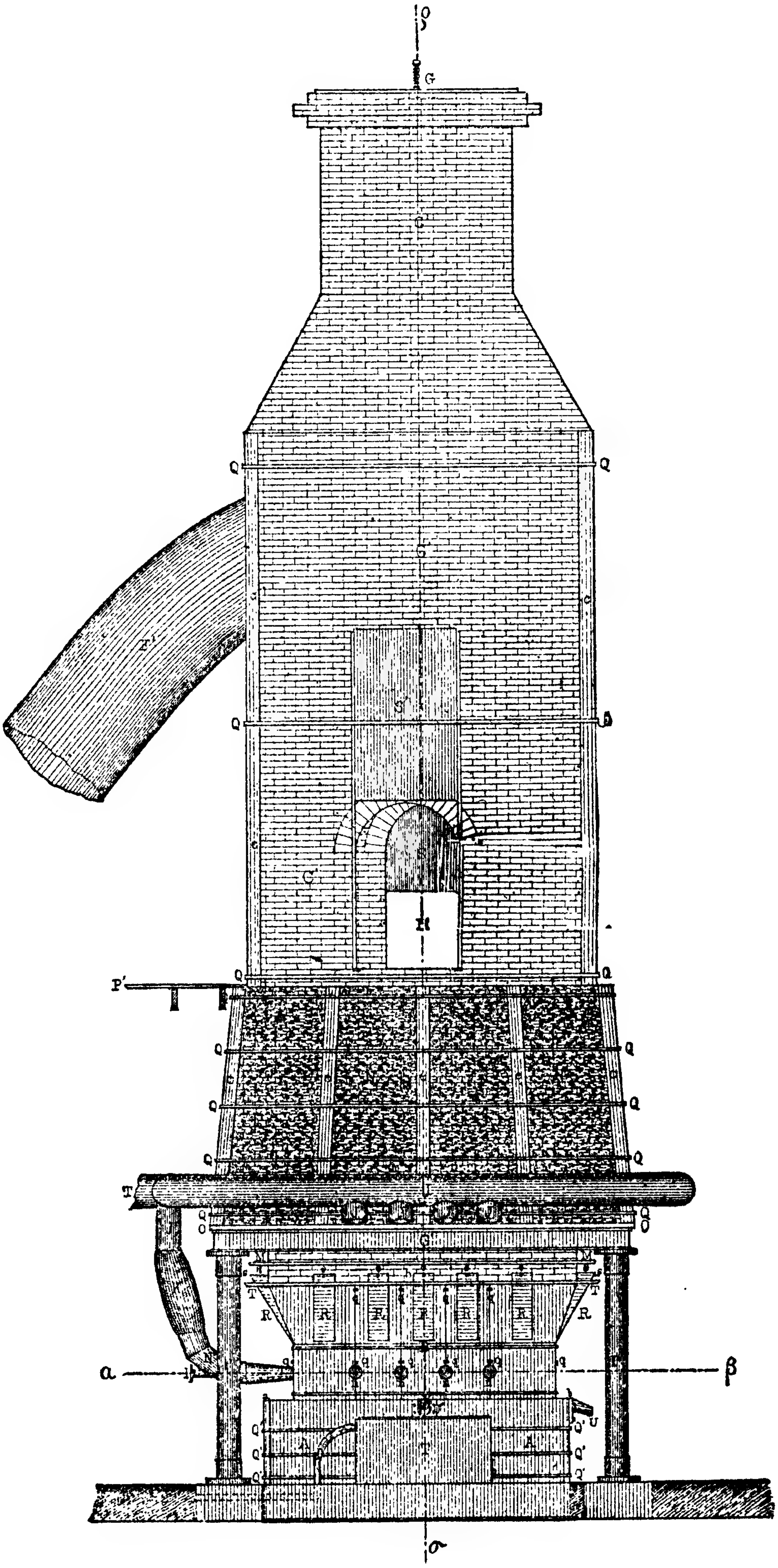

FIG. 62.—KEYE'S AND ARENTS' SQUARE FURNACE.—Elevation.
Scale, 1 inch = 9½ feet.

a section of the furnace, shown in elevation in Fig. 62.

Another improvement with these furnaces is, that the lead is not ladled out of the lead well, as at other smelters, but a tap-hole z′, Fig. 64, is made in its clay lining, and the bullion is drawn periodically into the cast-iron lead pot T′, mounted on a small cast-iron stove, in which a slow fire is placed in order to keep the bullion molten. The chimney, *f*, Fig. 65, of this stove communicates underground with the dust-chamber. The advantage of this disposition is twofold: the lead well may remain constantly covered, and its bullion be kept at a high temperature, thus assisting the clearing of the syphon when this is necessary; on the other hand, the bullion accumulating in the lead pot being kept molten, can be ladled rapidly into the moulds, and the bars thus obtained are of a good shape and uniform composition.

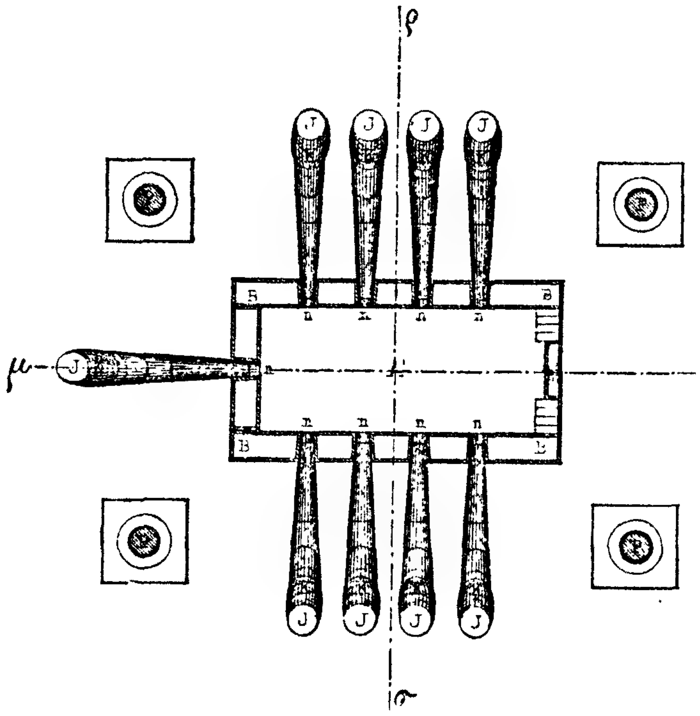

FIG. 63.—KEYE'S AND ARENTS' SQUARE FURNACE.—Section on *α β*.

The entire hearth rests on a bed-plate of boiler iron, with an angle iron rim, which encloses the base of the hearth-walls or lining of the crucible. These walls, X, are entirely of fire-bricks, but the dam of the crucible A″ is protected by tamping or pressed fire-clay, as are the syphon L′ and the lead well L. The bottom of the crucible is formed by an inverted fire-brick arch, with quartz brasque beneath, separating it from the bed-plate.

The hearth is inclosed on the sides by four cast-iron plates, *a*, each 1 in. thick, of which the front and back ones have each 2 in. flanges lapping over the ends of the side plates. These plates are firmly held together or inclosed by three rows of bars or rails Q′, Fig. 66, which are fastened at each corner by wrought-iron rings *p*, Fig. 65. The top of the hearth is also covered by iron plates, *d*, Figs. 64 and 66.

To the front hearth-plate is screwed and bolted the slag gutter or spout U, Fig. 66, and to the side plate, the lead gutter U′, leading, Fig. 64, from the lead tap Z.

This furnace has also the peculiarity that the fore hearth does not project outside of the frame of the hearth. The crucible, though constructed on the same general principle as in other furnaces, differs essentially in the arrangement of details.

The water-jackets are thirteen in number, one in front, two at the back, and five on each side. They are screwed together and wedged at *q*, Fig. 62, and braced by tie-rods; the tie-rods under the hot water outlets, S, are not indicated in the drawing. The front water-jacket does not extend down to the hearth-plate, but rests on a fire-brick wall, in the middle of which is a small water-cooled cinder block inclosing the slag hole, Fig. 63, instead of the ordinary tymp stone.

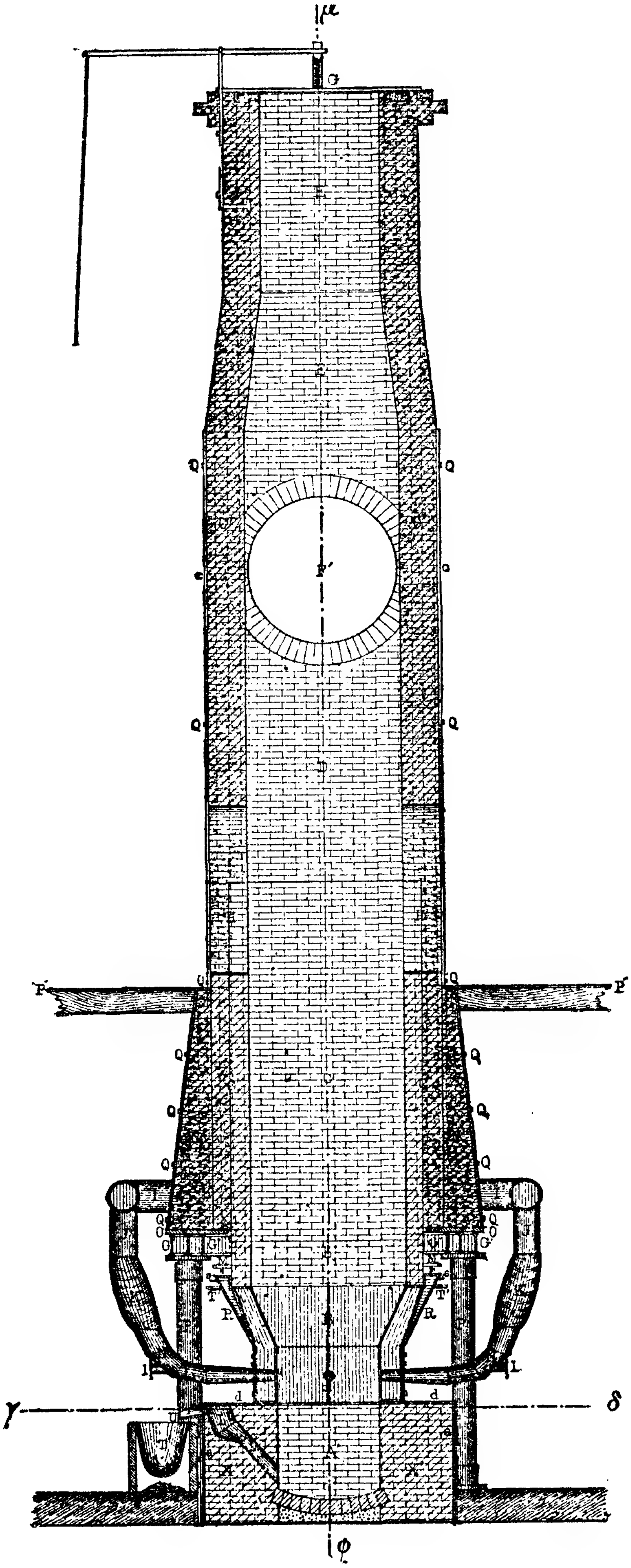

Fig. 64.—Keye's and Arents' Square Furnace.—Section on $\rho\ \sigma$.

Cold water is brought by the pipe M, and passes through short inlet pipes into the water-feeder, R, of each jacket. The heated water passes through the outlet pipes S, into the gutter T. The tuyere holes, N, are placed at the junction of the water-jackets, Figs. 62 and 66.

The shaft of the furnace from the water-jackets up to near the top of the feed-holes is lined with fire-brick. The rest of the masonry walls C′, are made of common brick, and rest on a cast-iron carrier plate, O, which in turn rests freely upon iron girders G′, three on each side of the furnace, which are firmly screwed and bolted to the capitals of the hollow cast-iron supporting pillars P.

The plate O is in no way fastened to the girders, so that its expansion and contraction are absolutely free. The obvious advantage of this arrangement is to render the masonry absolutely independent of the pillars, so that both keep their relative position unaltered by any lateral motion of the main support.

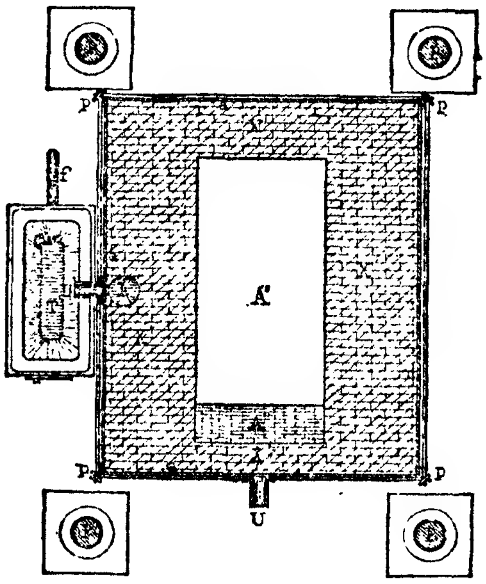

Fig. 65.—Keye's and Arents' Square Furnace.—Section on $\gamma\delta$.

Upon the cast-iron plate, O, an outer wall, N′, extending up to the charging floor, is built of common bricks. It is strongly braced by five rows of rails, Q, inclosing flat vertical irons *e*, and corner irons *c*. It is claimed that by the use of the outer wall, which naturally protects the hotter parts of the furnace against external radiation, a saving of 15 per cent. of fuel is effected; so that it must be considered as an important part of the furnace.

Each side wall of the furnace is provided with a feed-hole H, but in the present cuts these holes are not placed in the middle of the wall directly opposite each other, here they are placed to the left of the middle on either side. This arrangement is necessitated by the large dimensions of the furnaces, and enables the feeders to distribute properly the charge without effort. The feed-holes are provided, as usual, with sliding sheet-iron doors, S′, and have cast-iron door frames.

The chimney D is braced at Q, and provided with corner irons *c*. It is connected with the dust-chambers by means of the

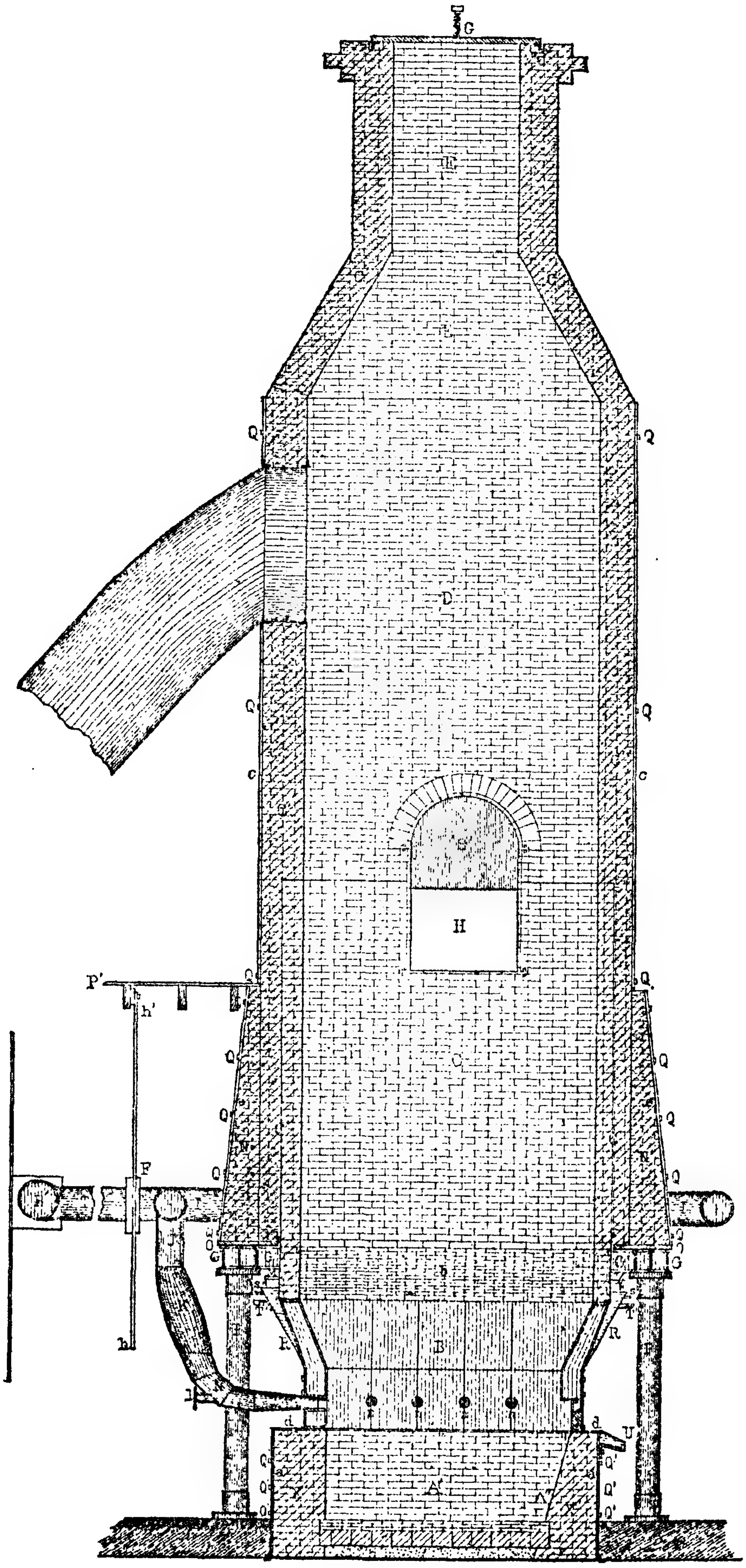

Fig. 66.—Keye's and Arents' Square Furnace.—Section on μ ϕ.

large sheet-iron flue F', which fits into a circular brick ring in the furnace wall, where it is held in place by angle-iron rings. The damper G, has riveted to it on its lower face an angle-iron rim, which rests in grooves filled with sand in the top of the furnace wall, thus providing against any escape of fumes when it is closed.

The best means to ventilate the building where the furnaces stand, is to make one big chimney in the front of the furnaces by a partition wall, extending the length of the building running up from the charging-floor on the line of the front of the furnace, and slanting a little backwards, so as to reach the middle of the ventilator at the ridge of the roof and where the top of the furnace projects above it.

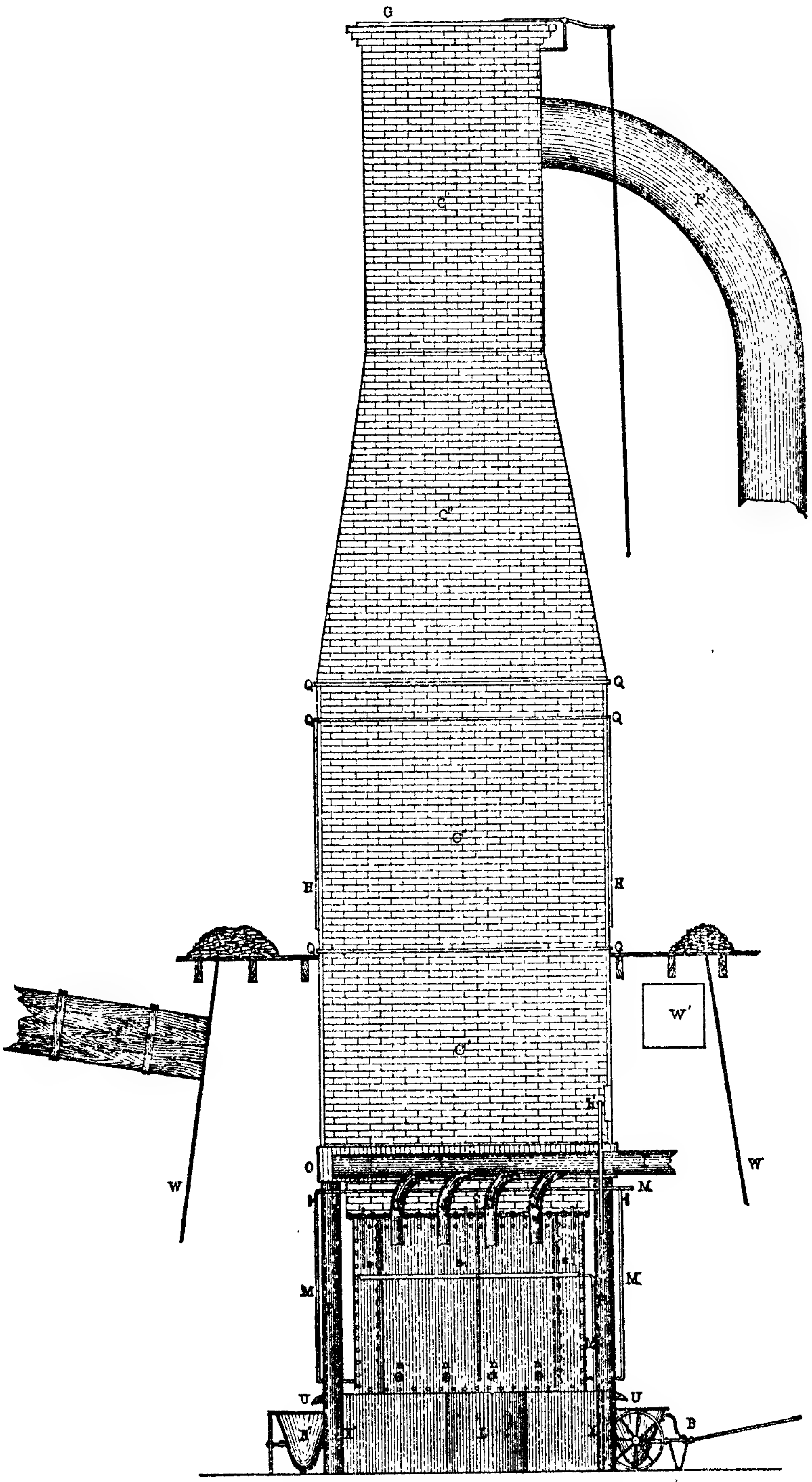

Fig. 67.—Rachette Water Jacket Furnace.
Scale, 1 inch = 7½ feet, or $\frac{1}{90}$.

Rachette Water Jacket Furnace.—An example of a water jacket furnace on the Rachette principle is shown in Fig. 67. Here the lead syphon tap, L, is placed in front of the furnace, and on each side of the furnace there are a fore hearth, X′, and a slag spout, U, alternately used for the tapping of slag. In B′, are seen the slag pots mounted on wheels.

The water jacket system is formed of four large jackets made of riveted boiler-plates. The front and back jackets are each provided with four tuyere holes. The dimensions at the tuyere are 3 by 5 ft. The main cast-iron plate support has a broad, vertical flange O, incasing the base of the masonry.

The furnace is fed from two feed-holes H, opened or closed by sheet-iron sliding doors. The feed-holes are placed in the side walls of this furnace, which correspond to the front and back walls of other furnaces. The capacity of this furnace is 38 to 40 tons of ore per 24 hours.

The Locke Improved Lead-smelting Furnace, manufactured by the Lane and Bodley Company, of Cincinnati, Ohio, U.S.A., combines all the latest improvements in smelting furnaces. The main features of this smelter can be briefly stated as follows:—

The crucible binders are made of ribbed wrought iron in lieu of cast, thus securing lightness without sacrifice of strength, and at the same time greatly reducing the liability to breakage. This substitution of wrought for cast iron extends throughout the whole structure. The furnace is of the rectangular pattern, with the corners cut off, thus allowing the uprights which support the deck plate to have foundations outside of the crucible binders. These uprights are rolled I beams, the grooves in their sides forming excellent racks for tools.

The deck plate is also made of rolled beams placed some distance apart, the space between them being utilised as a conduit for any vapours escaping from the furnace. Pipes lead from the above conduits to the top of the building.

The water jacket, which is in sections, is made of steel, in the following manner. The sheet forming the fire side of the jacket is shaped into a box, over 6 inches deep, without cutting the corners, so as not to have any riveted or welded joint exposed to the fire. The back plate is formed into a shallow box fitting into the other, the concave sides of both boxes facing outward, the outer edges of the two parts being flush, and in which position they are riveted and caulked, thus leaving the joint entirely on the outside.

Attached to the outside of the jackets are hoppers open at the top, and through which cold water is supplied to keep the jackets cool, and from which there is an overflow for the hot water. This form, known as the open-topped jacket, claims advantages over the method of closed jackets with an inlet and outlet pipe, in which case, if the openings of the inlet pipes are neglected or either pipe becomes obstructed, the results are serious, as steam would in such a case accumulate in the jackets to force out the water, and thus expose the jacket to being burnt.

In the present form such neglect or accidents become known at once to the furnace man, and in case of obstruction to the supply pipes, the open-topped hopper affords an opportunity to furnish the jacket with water during the repair of piping. The end jackets do not come down to the crucible by about seven inches. The space so left is filled up with a small closed-top jacket which can be readily removed. This construction does away with the old-fashioned brick breast, and in case of necessity enables the furnace man to rapidly open and close up the furnace at any time it becomes desirable so to do.

All the piping for air, supply and discharge of water, and the valves to the same, are so arranged as to admit of any jacket being removed without disturbing the connection of the remainder, and all valves are within ready reach of the furnace men.

The shape of the furnace internally is as follows:—From the tuyeres upwards the water jacket has a bosh on the sides, thus increasing the width to 5½ feet; the ends are perpendicular from the top of the jacket; the sides are perpendicular to the feed door, making the shaft 5 by 5½ feet. The height should be adapted to the character of the ore to be worked.

Plans and sections of this cheap and durable form of 5 ft. oblong furnace are shown in Figs. 68, 69, and 70.

A furnace of this description can be built up of six sectional

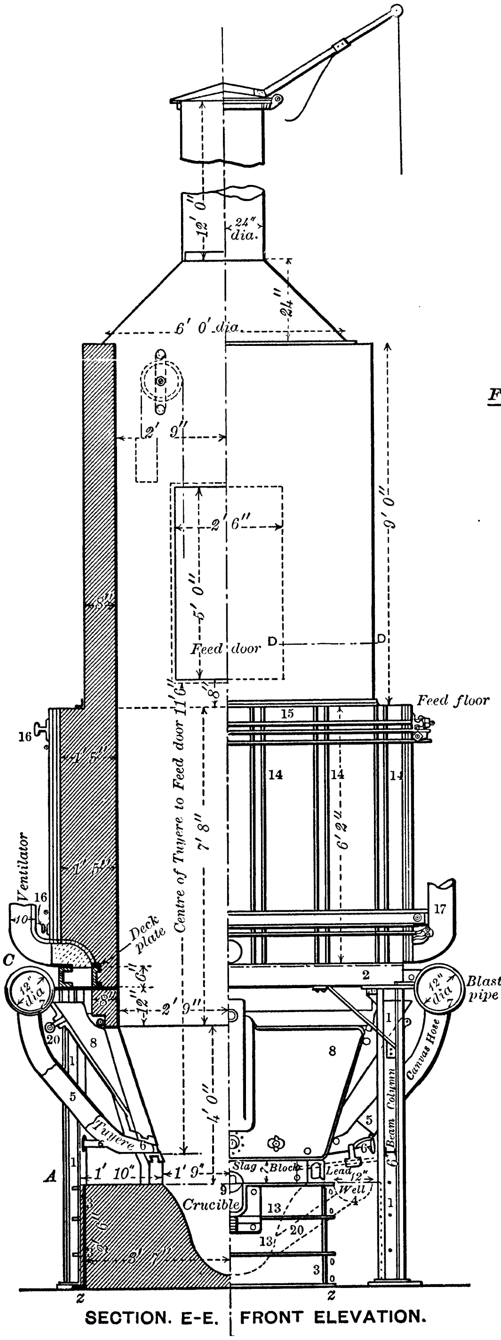

Fig. 68.

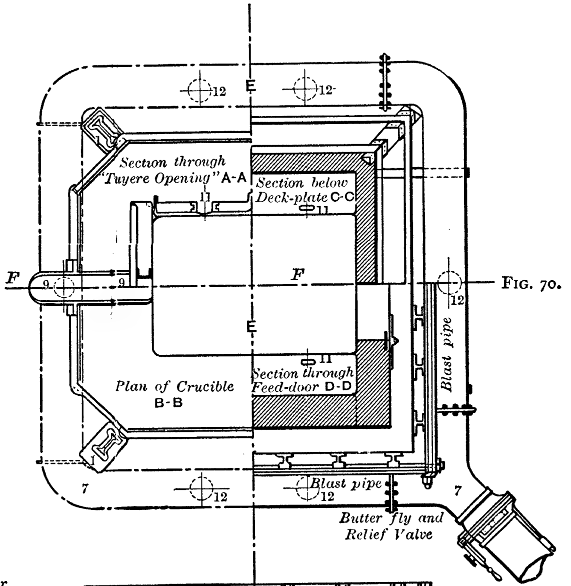

Fig. 70.

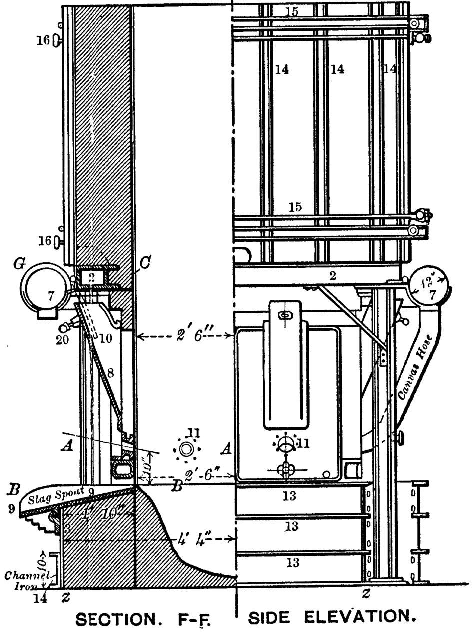

Fig. 69.

Figs. 68, 69.—The Locke Lead Smelting Furnace.

[To face p. 126.

water jackets, two on each of the long sides, one in front, and one at the back. The section of this furnace at the tuyere is 3½ ft. by 5 ft.; each jacket being provided with the tuyere openings 11, and, as is shown in the sketches, the jackets 8, which are about 5 in. wide at the bottom, slope upwards, the outer casing is given less inclination than the inner. They are preferably made of boiler iron. The water inlet pipe is shown in 10, and the outlet at 20.

In building up the furnace, the bed plate z z is placed in position, and to it is riveted a 10 in. channel iron 14, to which are again bolted the wrought-iron plates 3, which form a rectangular wall 2½ ft. high, inside of which the crucible is located. These plates are held in place and securely fastened by the tie-rods 13. The dimensions of the bottom part of the furnace are 7 ft. 2 in. by 8 ft. 8 in. The space inside is filled with a fire-proof composition made of fire clay and pounded coke, and the crucible, formed in the shape indicated in the cut, capable of holding 6 to 10 tons of molten lead. This crucible communicates by means of the channel 20 with the lead well 4, located outside the hearth. At 9 is the slag spout, and where matte and speiss is formed, another spout a couple of inches lower ought to be fixed.

Right upon the wall of the crucible rest the water jackets, which are 4 ft. high in the portion exposed inside the furnace, but the outer portion projects above this height as shown in the sketches. From the centre of the tuyeres to the top of the crucible is 10 in. The nozzles 5 are connected by means of canvas bags with the main 12 in. induction pipe 7. As seen in the illustrations, the upper portion of the furnace is built up on the iron deck plate 2, supported on four 6 in. (I) beam columns 1. The masonry is well braced by means of iron rails (16) held in place by being bolted and fastened at the four corners, and holding in position the long flat bar irons (14). In this manner a very strong bracing of the furnace is secured, which gives ample play for expansion and contraction. The total height of the furnace to the chimney is 23 ft. 4 in.; from the centre of the tuyeres to the feed door is 11 ft. 6 in.

The draught is regulated by means of a damper as shown in the figure, and there is no provision for any connection with condensing apparatus. There is a sheet iron hood in front of the furnace above the slag spout, leading to two ventilating pipes (7), which protect the workmen against the fumes.

Oblong Water Jacket Furnace.—Certain features in the furnace shown in Fig. 71 are in common with the previously described Probert furnace. It is covered with heavy sheet iron in its upper portion, A A. The water jacket, B B, also in sections, is made of wrought iron in two to four sections, which can be removed without disturbance to the rest of the furnace, which permits of its being cleaned out and repaired when necessary. The sections of the water jacket are connected, so as to admit of a free circulation of the water.

The upper portion, A, of the furnace rests on an iron plate, which is supported by four iron columns, C, and is separated from the water jacket by two layers of fire bricks, D. The lead well or crucible is built up on an iron foundation and curb, E E, inside of which the whole structure rests, and this prevents any escape of bullion in case of leakage from the crucible.

The lead well, F, is located outside the jacket, into which the metal is run from the tap and overflow G, and the well is kept hot by means of a small fire-place, while the dross and other impurities can be skimmed off before being ladled into moulds. The tuyeres are made in the jacket, and are surrounded by the water circulating through them. The jackets are rectangular in form with round ends, giving no corners for the accumulation of slag, which tends to bridge the ore and prevent it from coming in contact with the blast.

H and I are the spouts for the discharge of matte and slag. K K show the iron tubes which lead the compressed air to the wind-bags, J J, connected with the sheet iron nozzles L L, which are inserted into the tuyeres; and O O are eye-holes covered with glass through which the progress can be watched in the smelting zone. P is the water supply pipe for the jacket. At S S is the feed opening, and T is the chimney. In this furnace there are four tuyeres on each of the long sides and

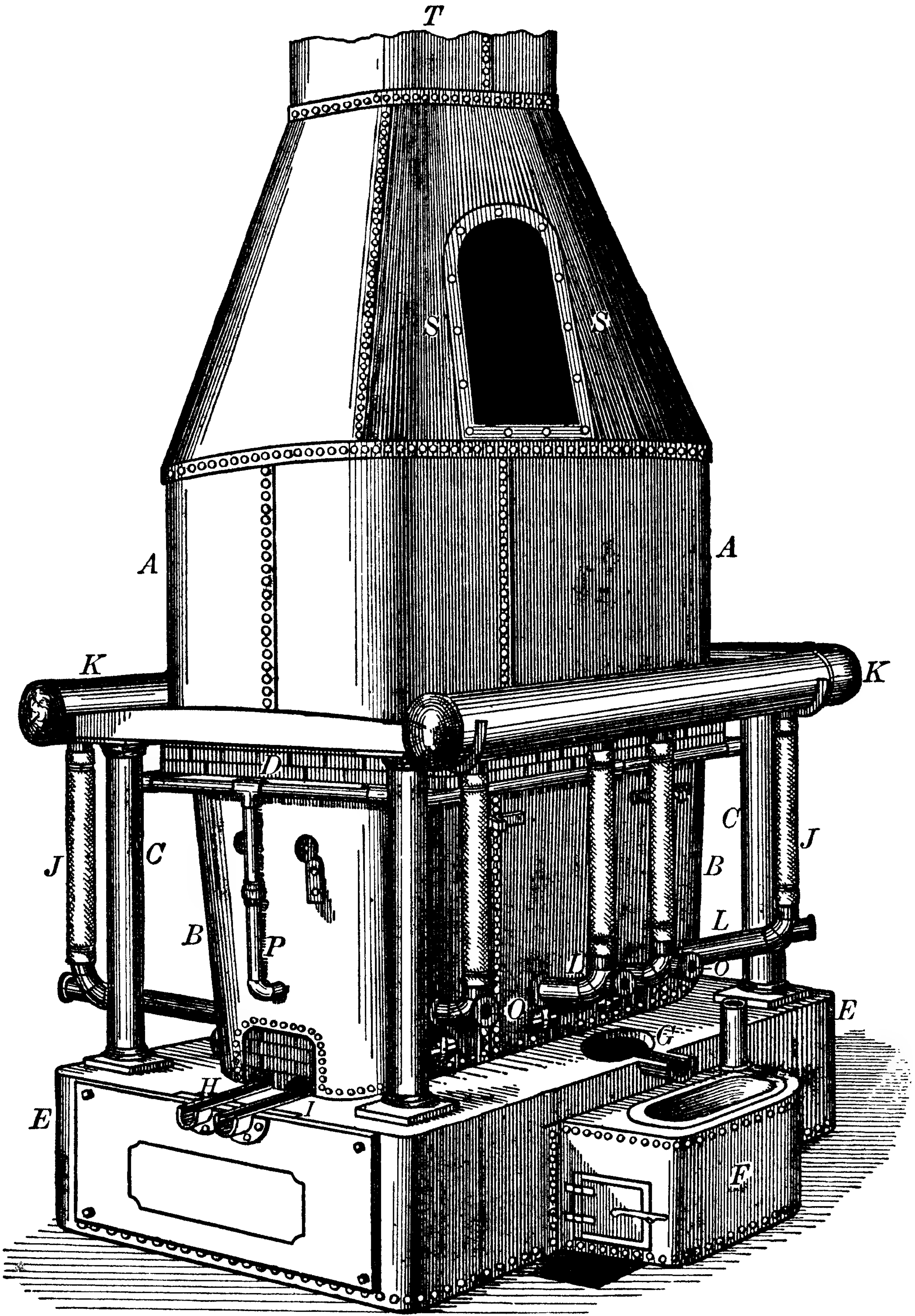

FIG. 71.—OBLONG WATER JACKET FURNACE.

two at the back, making ten in all. The portion A A is lined with ordinary bricks.

The capacity of these furnaces ranges from 20 to 40 tons per day, according to dimensions.* These furnaces are constructed by Messrs. Fraser and Chalmers of Chicago, who have made efforts to keep up their designs to all the late improvements made in this branch of metallurgy.

Specification for Forty-ton Water Jacket Furnace.—Fig. 72 shows a water-jacket furnace, as constructed by Messrs. Fraser and Chalmers, of Chicago, which is intended for pure ores, carbonates, and oxidised lead ores, carrying but little galena, the furnace being provided with only one slag spout and no matte and speiss spout. The upper portion is braced with iron bars only, and not surrounded with any iron sheeting. It has eight tuyeres, three on each of the long sides and two at the back.

The requirements for a furnace of this description, and having the capacity of 40 tons, would be as follows:—

1 Water jacket with wind and water pipe connections complete;
15 Lead moulds;
6 Slag pots;
2 Slag trucks;
6 Lead ladles;
1 Set of furnace irons;
1 No. 4½ Baker blower;
One 8 by 10 Blake crusher;
One 12-horse power engine to drive blower;
One 12-horse power engine to drive crusher;
One 30-horse power tubular boiler;
1 Steam-feed pump;
All necessary pipes and fittings to make connection between engines, boiler, and pump; also all necessary counter-shafting, pulleys, boxes, belting, pipes, cocks, and fittings for entire plant.
One 5,000 gallon water tank.

Such an outfit would cost in English money about £1,400 in New York, and would weigh about 45.000 lbs.

---

* For some particulars as to the smelting capacity of water jacket furnaces, see *post*, pp. 133—136.

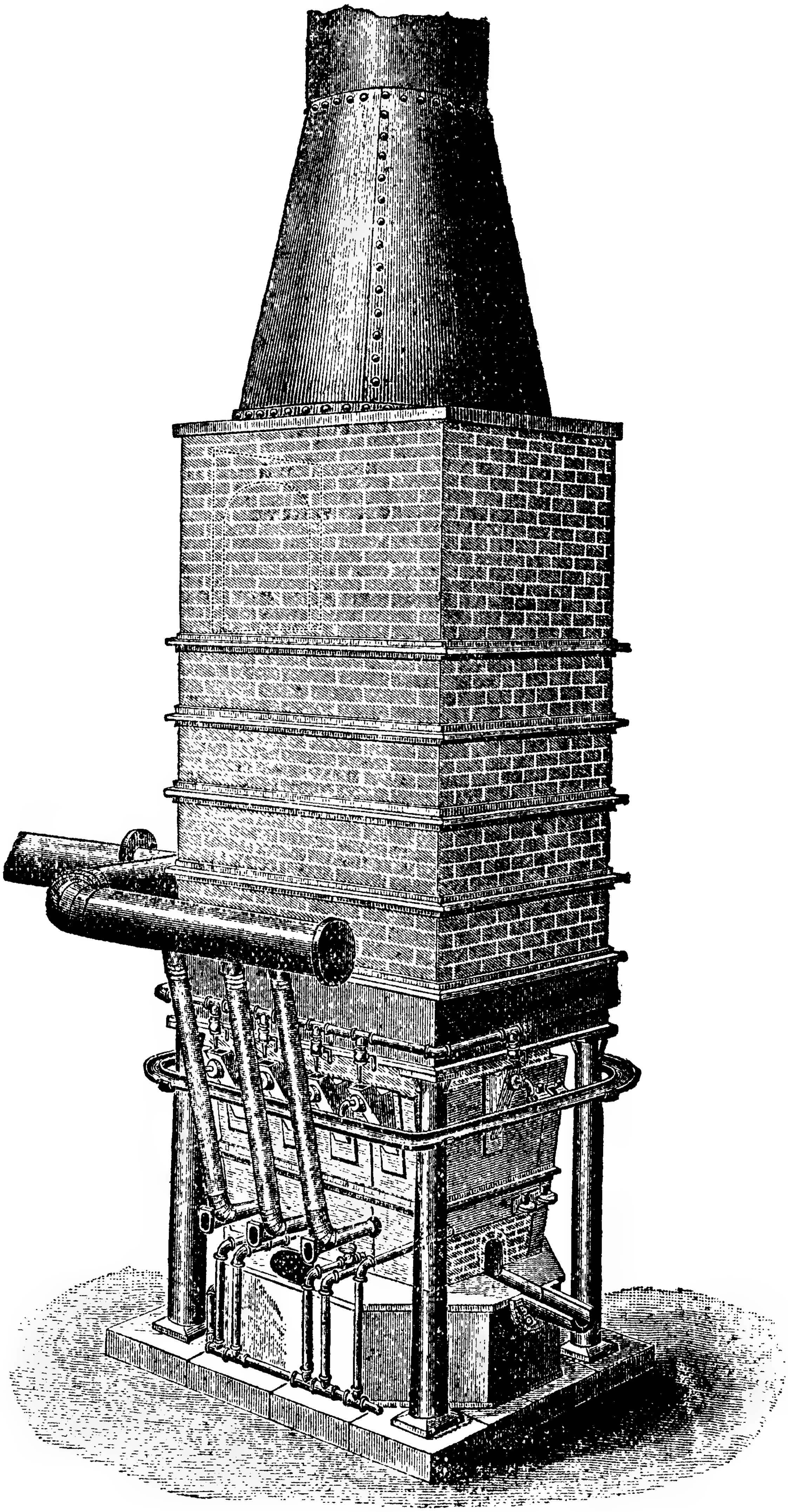

Fig. 72.—Sectional Water Jacket Furnace.

No provision is made in this specification for supplying the plant with water. If water cannot be brought to it by gravitation, and is furnished from a well or spring on level with the plant, an extra steam pump would be necessary to pump to receiving tank. The boiler of 30-horse power has ample capacity for supplying such a pump.

Should water be scarce, a reservoir can be put on the same level as the furnace to pump to the receiving tanks, so as to reduce the amount required. In this way the only loss would be by evaporation, and about 75 per cent. of the total amount required could be saved, so that a plant of this capacity may be run with 5,000 or 6,000 gallons of water per day. A couple of additional tanks are required where this is the case, for cooling purposes.

It is better to use two separate engines for blower and crusher, so as to secure a more steady and uniform blast than can be obtained from a single engine.

Specification for a Water Jacket Smelting Furnace.

1 Rock breaker.

1 No. 6 Improved Root blower with iron revolvers.

1 Improved water jacket smelting furnace, 33 by 84 inches, with improved tuyeres. Jackets made from wrought iron in usual manner, with inside hoppers, and all necessary iron work to make the furnace complete and perfect in every respect.

1 Complete set of water pipes, valves, and fittings, for feeding above water-jacket furnace, and for discharge water, the feed pipe ready to receive connection with main water supply.

1 Complete set of blast pipes for above furnace proper with all nozzles, tuyere pipes, canvas hose, marlin, and everything that is necessary to make blast pipes for furnace proper complete in every respect, and ready to receive connection with main blast pipe leading to blower.

All binder rods and braces for brick work.

1 Complete telescope stack with all fixtures and fittings belonging thereto, including chain, weights, &c., &c.

1 Iron dust flue pipe, made from No. 10 iron, with elbows and connections, for leading from furnace into main dust chamber.

6 Dust chamber doors with all fixtures and fittings complete belonging thereto.

1 Galvanized iron blast pipe, sufficient diameter for carrying blast for fur-

nace, with all elbows, connecting pipes, &c., for connecting the furnace with blower.

1 22-inch air valve for pipe leading to blower.

1 Safety or relief valve on main blast pipe.

1 Single platform elevator complete with all fixtures and fittings belonging thereto, to be driven from shafting in smelting works.

Water tank for supplying water jacket, 10 feet diameter by 6 feet deep, made from seasoned wood, with all necessary bands and fixtures belonging thereto.

2 pair of flanges with the necessary bolts to fasten to above tank for water inlet and discharge.

1 Knowles' pump, 6 by 4½ by 7, to be used in pumping water into above tank.

1 Fairbanks or Howe charging scale with four beams. Platform about 43 by 43 inches, with English weights.

All shafting, pulleys, bearings, belting, lace leather, &c., necessary for the complete establishment.

All necessary steel wire rope for elevators.

Furnace tools :—

40 Lead moulds, branded.
8 „ ladles with handles.
8 „ „ without handles.
10 Anti-friction rollers bearing slag pots and carriages complete.
6 Extra slag pots.
6 No. 5 steel tray barrows with pipe handles, shipped knocked down for convenience in transportation.
500 pounds steel furnace bars.
1 Corliss engine, 85 indicated horse-power, 14 inch bore by 36 inch stroke, complete.

1 Tubular horizontal boiler of 60 horse-power, size 54 inches in diameter by 16 feet long, complete with all fixtures and fittings.

1 Knowles' steam feed pump, No. 2.

1 Tubular steam heater, 20 inches diameter.

All piping, valves, and fittings to connect engine, boiler, pumps, tanks, water supply, heater, &c., &c.

Capacity of Water Jacket Furnaces.—Water jacket furnaces, as shown in preceding illustrations, are made of various dimensions, but their capacity depends mainly on the character of the ores smelted. Subjoined some particulars are given of their performances from authentic reports* :—

---

* For several reports here cited I am indebted to the courtesy of Messrs. Fraser and Chalmers.

1. *Capacity of* 33 × 84 *inch furnace:—*

(*a*) Composition of smelting charge, 70 ore, 14 iron ore, 16 limestone. Averaged 30 tons of ore net, or 42 tons of smelting mixture per day. Average lead in the smelting charge, 13½ per cent. Consumption of coke, 12½ per cent. of smelting charge, or 5 tons. Every ton of smelting charge required 250 lbs. of coke. Every ton of ore required 333 lbs. of coke.

(*b*) With ferruginous lead ores — carbonates with little galena to smelt. The ore required only the addition of lime. Average lead in the smelting charge, 15 per cent. Smelting capacity for ore, 38 tons, and 47 tons of smelting mixture per day. Fuel used, mixture of 3 coke to 1 charcoal; 12 per cent. of smelting charge or $5\frac{69}{100}$ tons. Every ton of smelting charge required 240 lbs. of fuel. Every ton of ore required 297 lbs of fuel.

2. *Capacity of* 36 × 60 *inch furnace:—*

Experience has shown that a furnace 36 by 60 in. will smelt in 24 hours about 48 tons of carbonate ores free from zinc, containing 40 per cent. of lead, in addition to all necessary fluxes—say 75 tons in all, with fuel. Such a furnace has produced with the same grade of ore 15 tons of bullion daily, but with ores containing only 18 to 20 per cent. of lead, it would run about 18 tons of ore daily, with fluxes added. The proportion of fluxes used with low grade ore in lead is very much higher than with ores high in lead.

A smelting company in Montana reports that the capacity for work of a 36 by 60 furnace depends upon the amount of silica in the ores. With ores carrying 30 per cent. of silica, such a furnace puts through 30 tons of ore and 35 tons of flux, consuming 1,800 bushels of charcoal; with ores containing 35 to 38 per cent. of silica, 20 tons of ore and 27 tons of fluxes, consuming 1,400 bushels of charcoal.

3. *Capacity of* 36 × 42 *inch furnace:—*

(*a*) From a report regarding a 36 by 42 in. furnace, it appears that with more difficult ores, containing zinc, alumina, &c., the average capacity was 30 tons of charge in 24 hours, the charge including coke and flux; while another furnace at the same works, dimensions 36 by 54 in., made about 35 tons.

(*b*) Low grade ores, carrying 5 to 7 per cent. of zinc—capacity, 27 tons net. Fuel, coke 3 parts, charcoal 1 part; consumption 12 per cent. of the smelting charge.

(*c*) Capacity, 30 tons of charge, including flux and coke. Coke used in proportion of 6 mixture to 1 coke. The ore contained zinc and alumina.

(*d*) Capacity, 28 to 30 tons of ore and 4 to 5 tons of fluxes. Uses 1 ton coke to 7 tons smelting mixture. Uses No. 4 Baker blower for this furnace, running 150 revolutions per minute. Jackets require 25,000 gallons water a day.

4. *Capacity of* 36 × 54 *inch furnace*:—

Another report says that a 36 by 54 in. furnace smelts 30 to 35 tons of mineral ores, with 4 to 6 tons limestone flux, per 24 hours. One ton coke is consumed per 7 tons of smelting mixture. The blast is furnished from a No. 4½ Baker blower, running at 140 revolutions per minute.

The amount of water required varies very considerably. When starting up, before the jackets are coated or encrustated with slag, much more is needed than afterwards. In ordinary running, the 36 by 54 furnace requires about 30,000 gallons per day, and the 36 by 42 about four-fifths as much. In blowing in, 25 to 30 per cent. more will be needed.

Capacity of Round Smelting Furnaces.—A round wrought-iron jacket furnace, 42 in. diameter, smelts on the average from 18 to 20 tons of mixed ores—carbonate, sulphate, and galena—in 24 hours, with the necessary fuel and fluxes.

One superintendent reports that, although of course variable, the charges may be summed up as follows:—Ore, 300 lbs.; iron ores, 75 to 100 lbs.; limestone, from 50 to 75 lbs.; fuel, from 75 to 100 lbs.: slag, *quantum sufficit*. A furnace of these dimensions, when working ores containing above 35 per cent. of lead, will pass through 25 tons in 24 hours.

A smelter working a 40-in. round furnace reports that the ores at their works are refractory, having the following composition:—

20 per cent. silica.
10 „ „ zinc blende.
27 „ „ galena.
43 „ „ iron pyrites.

This ore, after a preliminary roasting and slagging, is smelted with the addition of 11 per cent. limestone. When the furnace is working in her normal condition, 30 to 35 tons are smelted each 24 hours, consuming 20 per cent. of charcoal of poor quality. The jackets use 450 gallons of water per hour. The blast is furnished by a No. 5 Baker blower under 10″ water pressure, forcing 2,250 cubic feet of air through the furnace per minute.

The superintendent of a Mexican smelting works reports the operation of a 42-in. round water jacket furnace as follows:—"In smelting ores from different mines all over the territory, a mixture is obtained which does away a great deal with fluxing. The lead contents vary from 12 to 22 per cent., and the capacity of the furnace from 15 to 25 tons of dry ore, or from 19 to 30 tons of charge, including ore and flux. All the flux used besides lead and silver ores consists of limestone. To smelt the above amount in 24 hours, 65 to 100 bushels of charcoal, and from 5,200 to 8,000 lbs. of coke, which is 15$\frac{5}{6}$ per cent. of the charge, or slightly above 6 : 1."

CHAPTER VI.

THE PROCESS OF SMELTING.

GENERAL CONSIDERATIONS IN THE ERECTION OF A SMELTING PLANT—General Disposition of Smelting Works—Smelting Works in Leadville, Colorado—Blowing-in a Cupola Furnace—Starting and Charging the Furnace—Running off the Slag—Matte and Speiss—The Syphon Tap and the Melted Bullion—Regulating the Furnace—Blowing-out the Furnace—Chemical Reactions during the Smelting Operation—Reactions of Lead Compounds—Reactions of Silver Compounds—Reactions of Iron Compounds—Chemical Reactions of the Different Zones—Mr. Henrich on Manipulation of Temperature in Furnace.

General Considerations in the Erection of a Smelting Plant.—The mine owner has to determine, first of all, the ore producing capacity of his mine, and he will erect his plant accordingly. Under any circumstances it will be more advantageous to erect two smaller-sized furnaces in lieu of one large one, as in case of repairs or accidents no complete stoppage becomes necessary, and one furnace can be kept running while the other undergoes repairs.

Having determined the site where the works are to be located, a plan and section of the ground should be made, having due regard to the water supply; and this plan should be sent to the manufacturers of the machinery, who in their turn will prepare full working drawings and specifications.

If the ores require fluxing, and generally they do, the mine owner must look around the country and ascertain if the fluxes are to be found in the vicinity; what is their cost of extraction on the spot; and what the transport charges will be to the smelter, as they will form an important item in the cost of reduction.

The question of cost of fuel has next to be gone into, and the nature of the fuel determined.

From the average character of the ore he will be able to estimate the quantity of lead bullion he will produce, how much it will contain in silver, and what it will cost for transport to bring it to a market where he can turn his lead bullion into gold coin.

By a similar calculation he will arrive at the ratio between the quantities of ore, fuel, fluxes, and bullion he will require and turn out. After calculating the cost of plant, interest on capital invested, labour of ore-getting and mining, he can determine if it will pay to smelt the ore and embark in the enterprise.

The cost of smelting a ton of ore depends on so many circumstances, that any rule or figure laid down would only be misleading, as conditions vary in every locality, but it depends in the main on (1) the cost of fluxes and fuel ; (2) cost of labour and transport; (3) character of the ore ; (4) cost of mining.

General Disposition of Smelting Works.—It is always best to choose a site having a sufficient grade or fall to level ground, which will permit of the works being so erected that each compartment or story can be easily reached, as the construction of a smelter requires that a certain part of the work should be performed on a higher level, and other work on a lower level.

Thus, the side of a gently sloping hill is the best place for a smelter, and (1) on the highest point should be placed the charcoal or coke bins and ore bins ; (2) below this should be a level place, near the furnace, for the rock breaker, and in front of the rock breaker should be the mixing floor; (3) below this, or on the same level, the feed floor ; (4) while the furnace and bullion level may be a few feet below the discharge spouts of the furnace ; (5) on the lower level there should be the slag dump.

Fig. 73 shows an elevation of a smelting and cupelling plant, with three water-jacketed furnaces, erected by the Pacific Iron Company of San Francisco, to whom I am indebted for the illustration. A, A, A are the three furnaces discharging

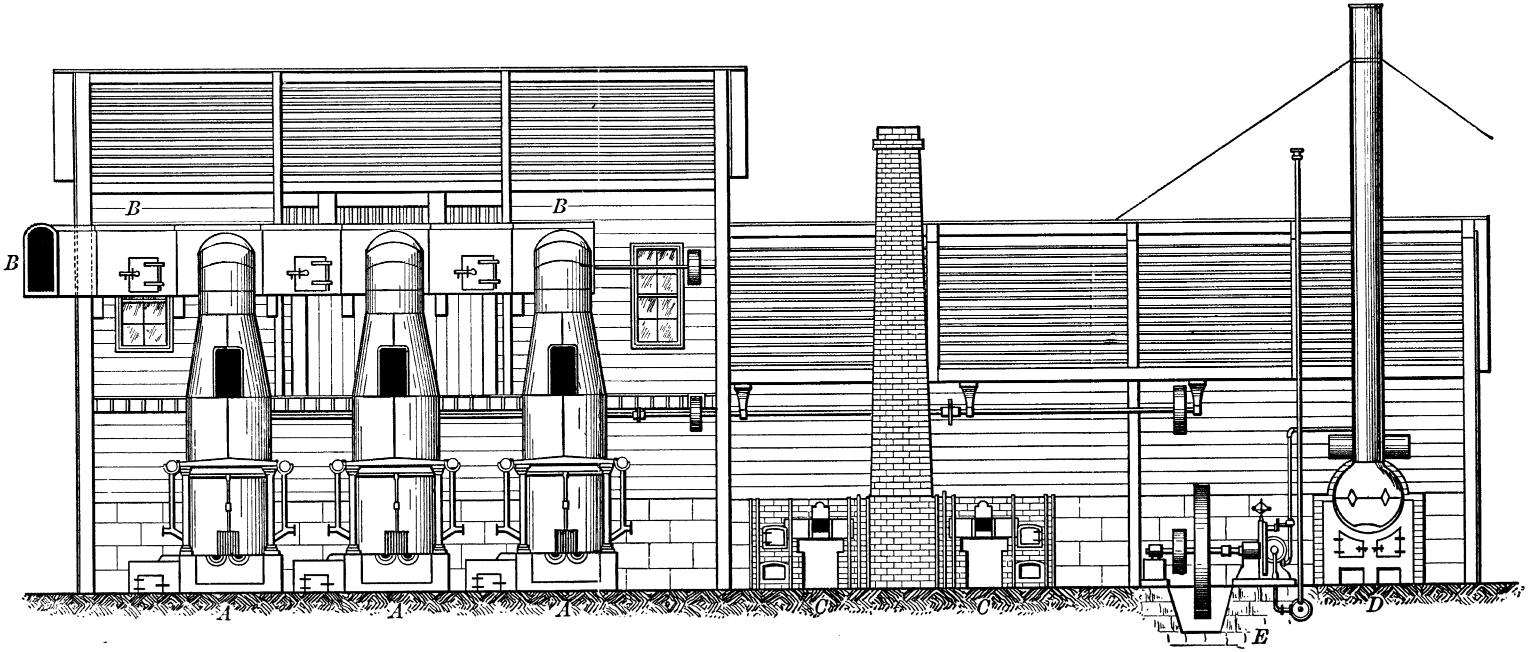

FIG. 73.—SILVER LEAD SMELTING AND CUPELLING PLANT ERECTED BY THE PACIFIC IRON COMPANY OF SAN FRANCISCO.

into one flue B B. C, C are two cupelling furnaces after the English pattern, which will be found described at pages 234—237. D and E are the boiler and engine.

Smelting Works in Leadville, Colorado.—These are shown in Fig. 74 in a transverse section. In the deep cutting, *u y z*, the furnace B and dust chamber D′ are erected. In front of the furnaces, and extending some little distance, is the slag heap X, upon which are seen piles of bullion in bars, A, ready for shipment. The furnace B is connected by the sheet-iron flue *f*, with the dust chamber D′.

The water-jackets of the furnace are supplied with water from the main pipe, *m*, connected with the tank D, placed on the feeding floor Y Z, and constantly filled with water by means of pumps worked by machinery. The sheet-iron stack F, communicating by a flue D″, with the dust chamber D′, carries off the smoke. On the feeding floor, and in close proximity to the feed-holes of the furnaces, are disposed the fuel and old slag used as flux, as well as the mixtures of ore, dolomite, and hematite entering into the composition of smelting charges.

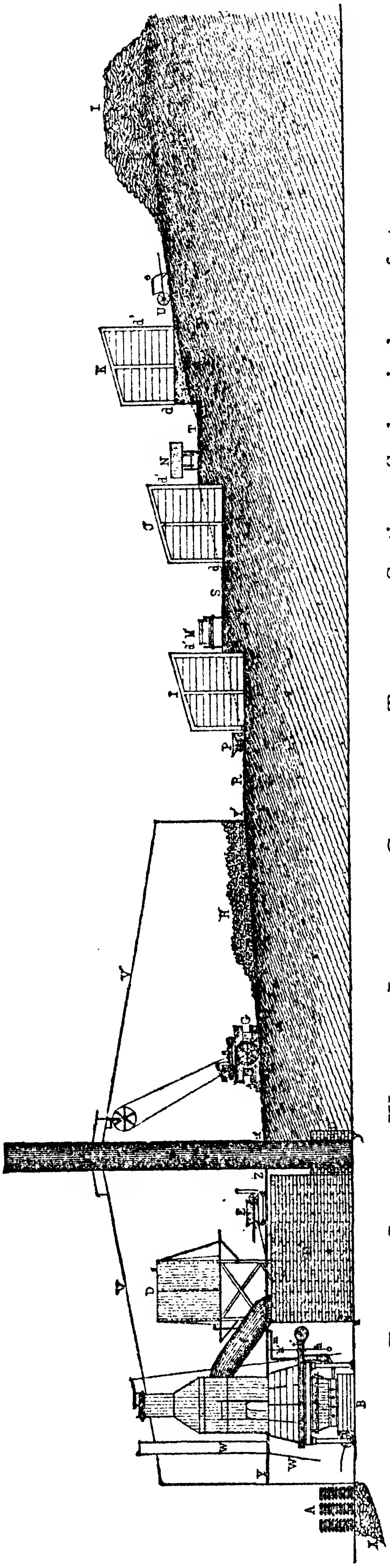

Fig. 74.—Smelting Works in Leadville, Colorado. Transverse Section.—Scale, 1 inch = 40 feet.

On the portion Z Y′ of the feeding floor are seen the crusher G and the ore beds H, on the top of which are placed bricks of flue dust and lime, specially moulded in this form previous to resmelting with the ore. To the right and left of the ore beds are rows of ore bins, supplied from the waggon road R. The scales E, placed on the feeding-floor, are used for weighing the different elements of the smelting charges, special ores and fluxes, which are classified and distributed right and left on each side of the scales. The portion of the works placed between Y and Y′ is inclosed in a light timber construction V, protecting the workmen, the plant, and the works against rain, wind, and cold.

I represents a second row of ore bins supplied from the waggon road S. These bins are made of light timber; they are opened in *d*, for the removal of the ore, which is wheeled to the crushers in the wooden ore barrows P. The bins are supplied from the ore waggons M, through the aperture *d′*, which can be closed by hinged wooden doors. J is the third row of ore bins, exactly similar to the preceding. In K is a fourth row of ore bins, similar to those previously described, and at U a waggon road placed in direct communication with the upper level district road. At the extreme wings of the row of bins, K, are to be seen huge fuel bins for both coke and charcoal. L represents a heap of charcoal placed on the upper level of the works; on this level are also ore dumps and heaps of dolomite and hematite. Inclined ways run through the rows of ore bins, connecting the different levels, which allow the wheeling down of ores, fluxes, and fuel. The charcoal barrows, made of thin sheet-iron, are represented in O; they hold about eight bushels.

The feeding floor is connected with the furnace floor by means of a flight of steps placed outside the main building, and also by zigzag inclined ways for the wheeling up of old slag to be resmelted.

To illustrate the manipulations at a smelting furnace, I append a description of the process from the commencement of a campaign—namely, from the blowing-in.

Blowing-in a Cupola Furnace.—When the furnace is new, or when an old furnace has been recently re-lined, it is first of all carefully dried by means of a slow charcoal or wood fire, which is kept steadily burning and slowly increasing in temperature for several days, every precaution being taken to prevent the escaping moisture from loosening the masonry.

When heat is perceptible on the outside of the walls of the furnace, the drying is completed; the fire is then allowed to burn out, and the furnace left to cool. This done, the crucible is immediately lined, either with steep or brasque, in every part, or with tamping in some parts only, viz., the dam, syphon, and syphon tap. Brasque (as already mentioned) is a mixture of one part of fire-clay and one part coke dust, but more generally two parts fire-clay and one part coke dust. Tamping is a simple lining of fire-clay. It is only used for certain parts of crucibles entirely lined with fire bricks.

Starting and Charging the Furnace.—The hearth and furnace having been dried in the manner above described, the furnace is gradually filled up, from the hearth to the throat, with charcoal, care being taken to keep it blazing. The tuyere holes of the water-jackets are left open, as well as the tymp-stone and the damper of the stack, in order to create a draught. This filling up takes from five to six hours with the large style of furnaces. As soon as the coal at the throat has reached a dark red heat, the blowing-in proper commences.

With furnaces without water-jackets, previous to putting on the blast, however, the front is put in, that is, the space under the bridge is closed up with bricks of stiff clay, rammed in tightly and reaching a few inches below the dam plate. The fore hearth is also covered with clay, pounded down tightly. With water-jacket furnaces the tymp-stone is set in, and the blast is then turned on at full pressure.

All the tuyeres, except the four nearest the front, are closed with clay stoppers; their respective windbags are tied up with strings, to prevent the escape of wind. The nozzles of the four tuyeres named are now placed in position, and the blast is allowed to blow with full force for three-quarters of an hour, a long flame issuing all the time from the pipe of the syphon tap. When the latter is red hot, the blast is shut off by a cut-off in the main pipe. The clay balls are now removed from the closed tuyeres, and all the nozzles are put into the tuyeres. The blast is turned on again and the charging commences. About three to twelve tons or more of lead are put into the furnace through the feed holes, in the proportion of two scoops (a 1·2 bushel) of coal to 250 or 300 lbs. of lead. This is done to heat the hearth properly, and prevent the accretion of slag or cinders, which might seriously interfere with the good working of the furnace.

When molten lead makes its appearance at the top of the syphon tap a few pieces of live charcoal are placed upon it to prevent it from cooling, and the furnace is ready for charging.

About 250 bushels of coal are used in all the foregoing proceedings. Old slags are first of all thrown into the furnace, as a kind of test of the temperature of the furnace, which is not ready so long as the slags are not perfectly fluid. The tap hole in the tymp-stone has to be opened from time to time to ascertain their degree of fluidity, and the regular charging begins only when the slags run quite freely.

This point being attained, the charges are shovelled in to the stack, but close to the wall, a depression being left in the centre for the charging of the fuel. This mode of charging is generally adopted, but there are variations in the mode of mixing the materials forming the smelting charges. At some smelters fuel is first thrown in, then old slags, over the slags the fluxes, and above the fluxes the ore. At others fuel is mixed with old slags, and fluxes are mixed with the ore. But the mode usually adopted is to mix slags, fluxes, and ore together, and the fuel is kept separate. It is usual, however, to have the fuel in the centre, and the charge around it on the sides next to the walls.

It is natural, the ore and fluxes being in contact with the wall of the furnace, that this should cause the formation of wall accretions in the lower zones of the furnace, especially above the water jackets, and it seems more rational that an alternate charging of fuel first in the centre with ore on the sides, and then ore in the centre and fuel on the sides of the furnace, would do away with the formation of wall accretions, as the sides of the furnace would be heated to a degree which would prevent the accretions on its sides.

To remove any accretions which may have formed the furnace is barred out once a day, if necessary, by means of long-pointed bars and sledges. To do this, the charges are allowed to descend to the level of the wall accretions, the blast is turned off, and long-chiselled pointed bars are introduced from the feed holes between the accretions and the walls, and hammered down by means of sledges, and as they are broken down they mix with the charge and are smelted down. After all the projections thus formed on the walls are broken down, the blast is turned on again and the smelting operation resumed.

Running-off the Slag.—As soon as the lead has entered the pipe of the syphon tap below (which, as stated above, may be observed by the disappearance of the flame emanating from it up to that time), the basin of the syphon tap is covered with live coal and kept so all the time. Simultaneously the clay is removed from the fore hearth if the old style furnaces are used, or a tap hole is perforated at the middle of the base of the tymp-stone, when operating the water-jacket furnace, by means of a pointed steel bar about an inch thick, which is forced into the clay by gentle strokes of a light hammer.

The slag runs over the steep or clay with which the fore hearth is covered, then along the slag gutter and thence into the slag pot. The slag, entering from below the breast, rises in the fore hearth to the level of the slag-spout, which is a few inches below the top of the dam-plate.

As soon as the furnace works with regularity it becomes necessary to draw out periodically the molten slag from the furnace, which is done every fifteen to twenty-five minutes. A cast-iron pot of conical shape, 26 ins. deep, 15 ins. in upper and 6 ins. lower diameter (Fig. 75), mounted on wheels and made entirely of cast-iron, is brought close to the fore hearth of the furnace and placed under the slag-gutter, and the exit of the slag is urged by detaching the crust along the dam. As soon as a slag-pot is filled, the smelter plugs the tap-hole with a lump of soft clay stuck to the end of an iron so-called tapping-rod. For the first half-hour the slag is somewhat stiff and only red-hot from impurities, and from the fact that the furnace has not attained the proper temperature, but in the course of time it increases in fluidity and incandescence. During the tapping of the slag showers of red-hot slag sparks fly in every direction around the tap-hole. After the slag-pots are filled they are wheeled away to the slag heap. The slag is either allowed to cool completely in the pot, and the cone of slag thus formed is tipped out in a solid lump, or else the pot filled with molten slag is tipped over the edge of the slag-heap, where the slag runs down in a stream.

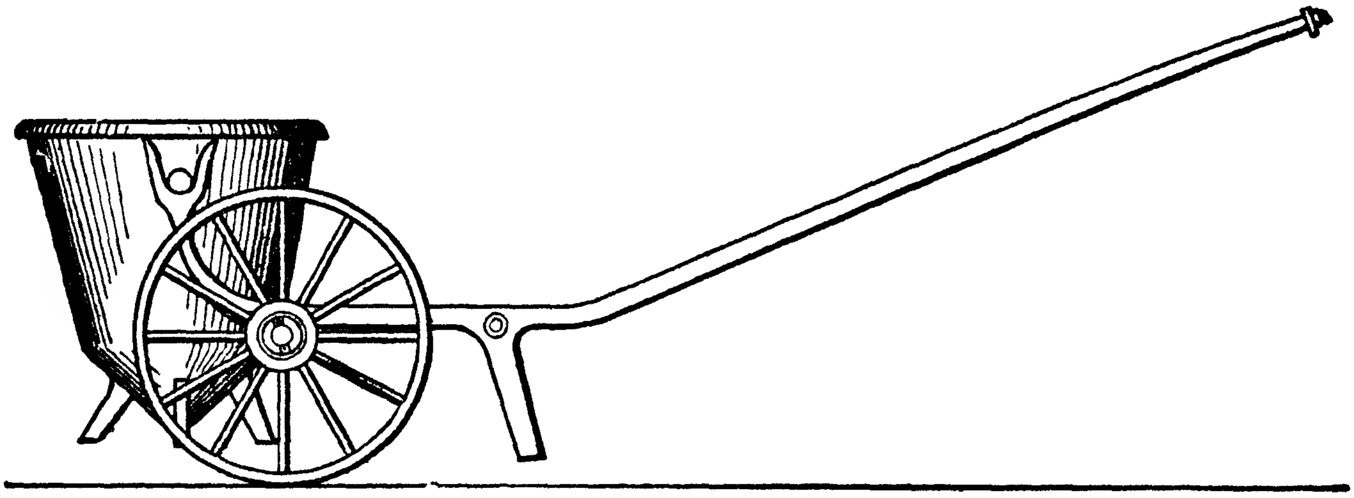

Fig. 75.—Slag Pot.

In some smelters the slag is left in the pot until a solid crust about 2 ins. is formed on the sides and surface of the mass. The upper crust is pierced by two holes, the slag-pot is reversed on the slope of the slag-heap, and its molten contents poured out. The thin shells of slag thus obtained are broken up and kept for smelting. It will be seen on assaying the solid crust and the still molten interior, that the solid shell is a little richer in silver than the portion of the slag poured out, and that the upper crust is poorer in silver than either the poured-out portion or the side shell; so that this portion of the slag might be thrown away as useless.

Several times during the day samples of slag are taken direct at the spout by means of an iron ladle, and turned over to the assayer to determine their contents in silver and lead, and also, if necessary, their specific gravity.

Matte and Speiss.—At some smelting works speiss, matte, and slags are thrown pell-mell over the slag-heap; at other works the speiss and matte which have settled at the bottom of the slag-pot are knocked off the slag with a hammer. If during the running of the furnace the slag when running from the spout is smeary and sticky, and emits a spray of sparks rising in parabolic curves, the matte spout .is opened and the matte run into a cast-iron pot lined with clay. This pot is of smaller dimensions than the slag-pot. Care must be taken to keep wet or even cold tools away from matte or metal to avoid explosion. When the matte ceases, and in its stead slag begins to flow, the matte spout is closed again with a clay stopper. The matte spout is 3 ins. lower than the slag spout and inclined a little towards the outside, while the latter lies horizontal. Thus it is possible to keep slag and matte separate.

The Syphon Tap and the Melted Bullion.—Meanwhile the syphon tap requires some attention. The pipe connecting the well with the crucible must be kept clear from accretions by pressing a red-hot bar through it from time to time, because it is very difficult to open it again after it is once closed up. From time to time bullion is ladled out of the lead pot by

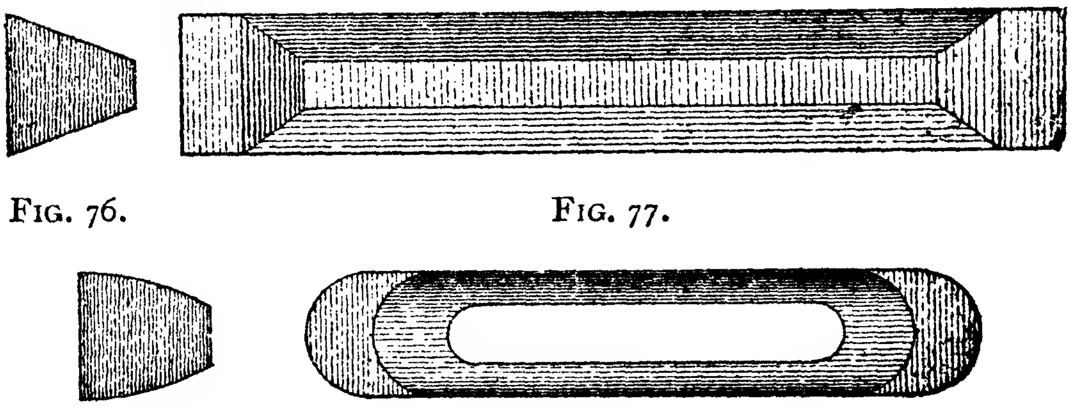

Fig. 76. Fig. 77.

Fig. 78. Fig. 79.

Lead Moulds.

means of wrought-iron ladles, and poured into cast-iron moulds placed in a row alongside the furnace on the lead pot side. The moulds bear in relief-letters the name of the smelting firm, so that each bar of bullion is branded with it. When cold the bars are taken out and wheeled under a shed, weighed and marked, and two small pieces are chiselled off (see Fig. 80) each side—*a a*, and kept for assay. The lead chips for a certain stack of lead, and weight obtained in this way are melted together and assayed for silver and gold as indicated in the chapter on assaying.

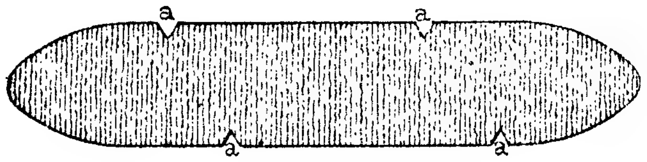

FIG. 80.—CHIPPED LEAD BAR.

Regulating the Furnace.—If under normal charges ore arrives raw before the tuyeres, and the blaze bursts out at the top, an irregular sinking of the charges or their detention on wall accretions is indicated. These have to be removed. To do this the charge is allowed to descend half-way in the shaft of the furnace, and only wood is applied as fuel. By its blaze the wall accretions are partly melted down. The balance is removed with chisel-pointed bars, worked through the feed-hole. During this operation the blast is of course shut off. The furnace is filled up again with coal, and the smelting proceeds as usual. Under ordinary circumstances the hearth is cleaned once in eight hours.

When the blower is stopped, it is absolutely necessary to promptly close all the tuyere holes, in order to entirely cut off all connection between the blower and the still hot furnace. If this precaution is neglected, the inflammable gases generated in the furnace may be forced up the back draft into the blower, where they become mixed with air; and upon again blowing in the furnace and starting up the blower, the mixture of air and gases will be forced into contact with the flame and an explosion, sufficient to disable or destroy the blower, connecting pipes, and wind chamber, will in all probability result.

The furnace ought always to run with a dark top, and this is one of the best indications that the furnace is working properly. By this is meant that the zone of the throat is perfectly dark; that no flame issues from it; that the top part of the charge shows no signs of incandescence; and that all that is seen is a thick black smoke ascending the chimney. The water-jackets must be fed regularly, and water is run into them at a rate that the temperature of the water issuing from them should be as nearly as possible 50° to 60° C.

The discharge pipes, through which the water flows after being used in the jackets, should be so placed that the water can always be seen running out of the pipes. These pipes should always be in full view of the furnace attendant so that the water can always be seen flowing from the discharge pipes into the trough carrying away the overflow. Whenever the water stops running from these overflow pipes, then it is evident that the furnace is not supplied with water, and the blast must be instantly stopped, else the furnace will be ruined by the creation of steam in the jacket, thus permitting the iron sheets to be burned.

The water jacket may be damaged seriously and an explosion follow, if, after it is observed that the water has ceased flowing through the overflow pipes, cold water is at once turned on into the furnace, the explosion resulting from the contact of the cold water with the hot iron.

The pressure at the induction pipe manometer must be constantly watched, and the pressure kept steady or modified according to momentary requirements.

The tuyeres must be kept clear by introducing a bar from time to time to detach obstructions. If there should be any sign of darkening, the charge must be decreased by two shovels, and the result waited for. If the charge be still too heavy, another decrease of two shovels is ordered, until the tuyeres resume their normal condition. If they should at any time get long black nozzles, the blast must be stopped and the hearth cleared out immediately. The reason of this occurrence may be an overcharge, or a preponderance of silica in the charge, *i.e.*, a faulty mixture. The black rings round the tuyere indicate a beginning of chilling. If the temperature proves too high, fuel is diminished or the charge is slightly increased.

If the slag is gaining in fluidity, and the tuyeres remain perfectly bright, not even showing the least black ring, two shovelfuls of slag may be replaced by two shovelfuls of ore; but this must be done with the utmost caution, and at intervals of from four to six hours. The normal running of the furnace is reached when the blaze at the top disappears, and the throat gets perfectly dark, discharging only black smoke.

If semi-fluid slags or raw ore form hearth accretions which do not disappear with an increase of the temperature, the blast must be shut off, the tymp-stone removed, and the hearth cleared from accretions by means of bars and sledges. A little fuel is then thrown in the hearth, the tymp-stone replaced, the blast turned on, and smelting resumed.

The barring-down of the furnaces is effected by fastening a rope to the upper end of a long and chisel-pointed bar; the chisel point is introduced through one of the feed-holes into the furnace, and forced by blows of a sledge hammer between wall and accretions. The rope is then thrown across the furnace to the other feed-hole, and five or six men pull at the rope. Voluminous masses of accretions are often detached in this manner and are left in the furnace, where they are subsequently fluxed down without serious stoppings and blowings-out. Even the sows float on the lead bath, remaining constantly at the same level, exposed to the oxidising influence of the blast, and to the sulphurising influence of mattes and unreduced sulphurets. They thus rather assist than hinder the completion and perfection of smelting, and very soon disappear, being fluxed down in this way.

During a stoppage the tuyeres are closed up to protect the workmen from the escaping carbonic oxide gas, and to economise the heat in the furnace. No new charge is introduced during this time.

Blowing-out the Furnace.—If wall accretions have increased to such an extent that they cannot be removed without the greatest difficulty; if the charges descend irregularly in spite of being decreased; or if the furnace walls show unmistakable signs of destruction, it is advisable to blow-out the furnace. The charge is allowed to go down to the tuyeres, the furnace emitting thick lead fumes and a blaze. As soon as the charge has arrived at the tuyeres, the blast is shut off, and all the loose masses are drawn out of the furnace. Then the tap-hole is opened with a sharp-pointed bar, and the liquid contents of the furnace are discharged into the lead well or basin, which has been previously heated. The congealed matter remaining in the furnace, consisting of slag, ore, &c., is detached with bar and sledge. The breast is only removed when needing repairs. After cooling, which usually takes thirty-six hours, the furnace is freed from wall accretions, and the injured places are repaired.

Chemical Reactions during the Smelting Operation.—The ferric oxide in the iron ore flux is reduced already in the upper zones of the shaft to ferrous oxide under the influence of the products of combustion, like carbonous oxide. The ferrous oxide in the lower, hotter zones of the furnace is reduced to metallic iron, which reacts on the lead sulphide, forming sulphide of iron and precipitating metallic lead. The silicic acid combines with the oxide of lead to form silicate of lead, which is decomposed by carbon and oxide of iron which precipitate metallic lead. The lead silicates are also decomposed by lime and iron oxides. A mutual reaction between the lead sulphides and lead oxides also takes place, resulting in production of metallic lead and sulphurous acid.

The temperature in the smelting zone should not be too high, so as to avoid an excessive reduction of the iron oxides, which would result in the production of sows and salamanders. The iron oxides also combine with the silica to form a silicate of iron; as a slag-forming ingredient, therefore, it is of the greatest value to the smelter.

In the upper zones of the furnace, namely, above the zone where actual fusion takes place, reactions are set in by the action of the gases upon solid substances, and in the fusion zone reactions are engendered by contact of the solid matter.

The elements which play an active part during the blast furnace operation are as follows:—

(1) The blast, consisting of oxygen, nitrogen, moisture, and carbonic acid.

(2) The fuel: when coke it consists of carbon, moisture, a little sulphide of iron, and a considerable quantity of ash, formed of silica, alumina, lime, and oxide of iron; when charcoal, consists of carbon, moisture, and a little ash, composed of alumina and alkaline carbonates.

(3) Limestone flux, when dolomite, consists of carbonic acid, magnesia, with small quantities of iron and other substances.

(4) Iron ore fluxes, generally hematite, containing peroxide of iron, protoxide of iron, carbonate of iron, with small quantities of other substances.

(5) The ores: carbonate of lead, sulphide of lead, sulphate of lead, pyrites, oxides of iron, and manganese, chlorophosphate of lead, chlorobromoiodide of silver, gold, zinc, titanic acids, and arsenic and antimonic acids, with small quantities of cobalt, nickel, and other substances. (This is the composition of most Leadville ores.)

Reactions of Lead Compounds.*—The following are the principal reactions of lead, silver, and iron compounds, and their action upon each other and upon the chief ingredients either used in smelting or produced by smelting:—

No. 1. *Reactions of Carbonate of Lead.*—Carbonate of lead loses its carbonic acid between 170° C. and 200° C. (according to J. A. Phillips), and is converted into protoxide of lead.

No. 2. *Reactions of Protoxide of Lead.*—Oxide of lead combines in the dry way with stannic acid, arsenious and arsenic acids, antimonious and antimonic acids, and with peroxide of iron and oxide of zinc (according to Berthier's "Traité des Assais par la voie sèche," Paris, 1834). That these reactions

---

* A. Guyard, "Geology and Mining Industry of Leadville, Colorado."

take place, Mr. Guyard's analyses of furnace accretions have shown.

No. 3. Oxide of lead is partially reduced to the metallic state by magnetic oxide of iron with formation of peroxide of iron:—

$$3\,Fe_3O_4 + 2\,PbO = Fe_3O_4 + 3\,Fe_2O_3 + PbO + Pb$$

(according to Berthier). The fact that some slags contain peroxide of iron in the state of silicate seems to indicate that this reaction takes place.

No. 4. Oxide of lead in excess is reduced to the metallic state by sulphur with formation of sulphurous acid:

$$2\,PbO + S = 2\,Pb + SO_2 \text{ (Berthier).}$$

This reaction undoubtedly occurs when the charges contain pyrites.

No. 5. Oxide of lead is reduced by arsenic, with formation of lead and arsenite of lead:

$$4\,PbO + As = PbO, AsO_3 + 3\,Pb \text{ (Berthier).}$$

No. 6. Conversely, metallic lead reduces arsenite of lead with formation of basic arsenite of lead and arseniuret of lead:

$$2\,(PbO, AsO_3) + 4\,Pb = 5\,PbO, AsO_3 + PbAs \text{ (Berthier).}$$

The presence of arsenite of lead in all the oxide of lead compounds of the furnace and the presence of arsenic in bullion show that reactions 5 and 6 are of frequent occurrence.

No. 7. Antimony acts on oxide of lead, and lead on oxide of antimony, in the same way as with arsenic (Berthier). The presence of antimonious acid in oxide of lead compounds and of antimony in bullion, shows that these reactions are constantly taking place in the furnace.

No. 8. Protoxide of lead is reduced to the metallic state by iron with formation of magnetic oxide of iron:

$$4\,PbO + Fe_3 = Fe_3O_4 + Pb \text{ (Berthier).}$$

To this reaction is undoubtedly due part of the magnetic oxide of iron found in slags and other furnace products.

No. 9. Protoxide of lead and silica combine easily at the temperature at which the oxide of lead becomes pasty. The silicate $3\,PbO, SiO_2$ is very fusible and very fluid. The silicate $2\,PbO, SiO_2$ is pasty (Percy's "Metallurgy of Lead," London, 1870). The presence of silicate of lead in all the slags shows that this substance is formed in the furnace.

No. 10. Oxide of lead and galena. In this well-known reaction sulphurous acid is evolved and lead is reduced to the metallic state (Berthier, Percy, Smith):

$$PbS + 2\,PbO = 3\,Pb + SO_2.$$

This is one of the fundamental reactions of blast furnaces which has been proved too often to need demonstration.

No. 11. Oxide of lead is completely reduced to the metallic state by charcoal, coke, oxide of carbon, hydrogen with formation of carbonic oxide, carbonic acid and water (Berthier, Percy, and others).

No. 12. Oxide of lead is reduced by zinc to the metallic state by formation of oxide of zinc:

$$PbO + Zn = Pb + ZnO \text{ (Berthier).}$$

The oxide of zinc deposited in accretions and fumes is undoubtedly produced in this way by zinc reduced in the zone of agglomeration.

No. 13. *Reactions of Silicate of Lead.*—Silicate of lead behaves almost exactly like protoxide of lead in its reactions upon sulphur, iron scales, iron, carbon, carbonic oxide, galena, &c. (Percy, Beck).

No. 14. Silicate of lead is completely reduced to the metallic state by mixtures of oxide of iron and carbon (Percy, Beck). This is undoubtedly one of the chief reactions of the furnace at the zone of agglomeration; but reaction No. 13 take place in most of the zones of the furnace.

No. 15. *Reactions of Sulphate of Lead.*—Sulphate of lead is decomposed by silica with evolution of sulphurous acid and oxygen and formation of silicate of lead (Berthier, Percy).

No. 16. Sulphate of lead is reduced by lead to the state of oxide with evolution of sulphurous acid:

$$PbO, SO_3 + Pb = 2\,PbO + SO_2 \text{ (Berthier, Percy, Smith).}$$

No. 17. Sulphate of lead is reduced by iron to the metallic state with formation of magnetic oxide of iron and sulphide of iron:

$$PbO, SO_3 + 4\ Fe = Fe_3O_4 + FeS + Pb.$$

There is but little doubt that the mattes of Leadville owe their origin in great part to this reduction.

No. 18. Sulphate of lead is reduced by carbon to the state of sulphide:

$$PbO, SO_3 + C_2 = PbS + 2\ CO_2$$ (Gay Lussac),

and also by carbonic oxide (Rodwell).

The sulphide of lead of the mattes is produced partly by these reactions.

No. 19. Sulphate of lead is decomposed by lime with formation of sulphate of lime and oxide of lead; some of the furnace products carry sulphate of lime.

No. 20. *Reactions of Sulphide of Lead.*—Sulphide of lead is somewhat volatile; it is sublimated at high temperatures (Berthier, Percy). This sublimated galena in fine distinct irisated crystals is one of the constituents of normal shaft accretions.

No. 21. Sulphide and oxide of lead react upon each other with formation of metallic lead and sulphurous acid (see reaction No. 10).

No. 22. Sulphide of lead and metallic lead combine together and form subsulphides and alloys. The analysis of bullion and skimmings prove this reaction.

No. 23. Sulphide of lead is reduced by zinc:

$$PbS + Zn = Pb + ZnS$$ (Percy, Smith).

The sulphide of zinc found in normal accretions and also in lead fumes is certainly deposited in virtue of this reaction.

No. 24. Sulphide of lead and sulphate of lead react upon each other with formation of metallic lead and sulphurous acid:

$$PbS + PbOSO_3 = 2\ Pb + 2\ SO_2$$ (Berthier, Percy).

No. 25. Sulphide of lead and iron produce one of the most important reactions of the blast furnace; lead is completely reduced to the metallic state and sulphide of iron is formed:

$$PbS + Fe = Pb + FeS$$ (Berthier).

Most of the sulphide of iron in mattes is produced in this way.

No. 26. Sulphide of lead and oxide of carbon act slightly upon each other with formation of sulphide of carbon (Rodwell). In all probability some of the silica found in that portion of the fumes which escapes in the air is volatilised in the state of sulphide of silicium by the sulphide of carbon thus produced.

No. 27. Sulphide of lead mixed with lime and carbon is partly reduced with formation of sulphide of calcium and carbonic oxide:

$$2\ PbS + CaO + C = Pb + PbS,\ CaS + CO \text{ (Berthier).}$$

This important reaction, which undoubtedly takes place in the zone of agglomeration of the furnace, accounts for the sulphide of calcium in the slags.

No. 28. Sulphide of lead, heated with oxide of iron and carbon, produces metallic lead and sulphide of iron:

$$4\ PbS_{12} + Fe_2O_3 + 3\ C = 4\ Pb + 4\ FeS + 3\ CO_2.$$

This reaction is interesting as indicative of what actually takes place in the furnace.

No. 29. Sulphide of lead and basic silicate of protoxide of iron react upon each other with formation of metallic lead and iron and lead matte:

$$2\ (3\ FeO,\ SiO_3) + 5\ PbS = 2\ (2\ FeO,\ SiO_3) + 2\ (PbSFeS) + SO_2 + Pb_3 \text{ (Percy, Cloud).}$$

No 30. *Reactions of Phosphate of Lead.*—Phosphate of lead forms, with chloride, bromide, and iodide of lead, very volatile compounds (Guyard). This is proved by the analysis of roasted chamber dust.

No. 31. Phosphate of lead is reduced by carbon and iron to the metallic state, like oxide of lead (Percy, Cloud). Part of the phosphoric acid found in the slags comes from this reaction.

No. 32. *Reaction of Chloride of Lead.*—It is a well-known fact that chloride, bromide, and iodide of lead are volatile compounds; hence their constant presence in lead fumes of every kind in Leadville.

No. 33. Chloride of lead with lime and carbon. Chloride of lead is reduced to the metallic state with formation of chloride of calcium and carbonic acid (Berthier).

$$2\ PbCl_2 + 2\ CaO + C = Pb_2 + 2\ CaCl_2 + CO_2.$$

The analysis of slags shows that this reaction does not take place in Leadville. It is chiefly due to the fact that chloride of lead is volatilised before carbonate of lime is decomposed, and it indicates that there would be an advantage in using caustic lime instead of raw limestone.

No. 34. *Chloride of Lead and Galena.*—These two substances form a very volatile chloro-sulphide of lead, similar to galena (Berthier). This product has been found in the portion of the lead fumes lost in the air.

No. 35. *Reactions of Metallic Lead.*—Lead is somewhat volatile (all authors). It has been seen in Leadville that normal accretions are chiefly formed of sublimated lead, which contain silver.

Reactions of Silver Compounds.—No. 36. *Reaction of Metallic Silver.*—Silver is somewhat volatile (all authors). The assay of sublimated bullion found in normal shaft accretions gives an idea of the relative proportion of lead and silver volatilised and sublimated in the blast furnace.

No. 37. *Reactions of Sulphide of Silver.*—Sulphide of silver combines with metallic silver and with sulphides of lead and iron. The analysis of bullion, skimmings, and mattes show that these reactions take place.

No. 38. Sulphide of silver heated with oxide of lead is reduced to the metallic state, with formation of an alloy of lead and silver and sulphurous acid.

$$Ag_2S + 2\ PbO = 2\ (PbAg) + SO_2 \text{ (Percy, Smith).}$$

No. 39. Sulphide of silver is not completely reduced to the metallic state by metallic lead in excess (Percy).

No. 40. Sulphide of silver is completely reduced to the metallic state by iron, with formation of sulphide of iron (Berthier, Percy).

No. 41. Sulphide of silver is not completely reduced by iron in presence of an excess of sulphide of iron (Guyard). A matte, analysed by Guyard, yielded 85·067 ounces of silver per ton by the scorification assay, and by ordinary crucible assay, when treated with flux, litharge, and iron, yielded only 80·16 ounces. This experiment throws light on many furnace reactions.

Reactions of Chloride of Silver.—What is said for chloride of silver is true for bromide and iodide.

No. 42. It is a well-known fact that this compound is volatile; hence its presence in large quantities in the lead dust and even in the lost fumes.

No. 43. Chloride of silver is reduced in the dry way by metallic lead, and also by metallic iron. It is owing to these important reactions that so much chloro-bromo-iodide of lead is formed, and that so much silver is reduced in the bullion.

Reactions of Iron Compounds.—No. 44. *Reactions of Carbonate of Iron.*—Carbonate of iron is reduced at red heat to the state of magnetic oxide of iron with formation of carbonic oxide (T. L. Bell), with formation of peculiar magnetic oxide of iron, containing an excess of protoxide of iron (Percy). A. Guyard has found a similar magnetic oxide of iron in slags and mattes.

No. 45. *Reactions with Peroxide of Iron.*—Under the influence of carbonic oxide, peroxide of iron begins to lose oxygen at the temperature of 200° C., protoxide of iron being formed as well as carbonic acid. The decomposition increases rapidly with the temperature, until it reaches 417° C. The loss in oxygen is greater in the same lapse of time in a rapid current of carbonic oxide. At 410° C. peroxide of iron loses 36 per cent. of its oxygen in a slow current of carbonic oxide, and 56 per cent. in a rapid current of the same gas (Bell). In the blast furnaces of Leadville the conditions are those of a rapid current. To form magnetic oxide, peroxide of iron must lose

11·1 per cent. of its oxygen, and to form protoxide of iron 33·3 per cent. Consequently at the temperature of 410°, *i.e.* below red heat and in a rapid current of carbonic oxide, peroxide of iron losing more than 50 per cent. of its oxygen, some metallic iron is produced. This is an important fact, but one which is profoundly modified in the furnace, where carbonic oxide is diluted with nitrogen and carbonic acid.

No. 46. At the temperature of 417° C., that is, at the temperature at which metallic iron makes its appearance, it is rapidly attacked by carbonic acid, with formation of oxide of iron and oxide of carbon (Bell).

No. 47. At the same temperature of 417° C. a mixture of equal volumes of carbonic acid and carbonic oxide exerts no action upon metallic iron, but at full red heat the carbonic acid of the mixture is rapidly decomposed and converted into carbonic oxide (Bell).

No. 48. Mixtures of carbonic acid and oxide reduce peroxide of iron, but only to the state of protoxide, at the temperature of 417° C., with formation of carbonic acid.

No. 49. A mixture of carbonic acid, with an excess of oxide of carbon (CO_2 9 volumes, CO 100 volumes) oxidises spongy iron, and carbon is deposited from reduced oxide of carbon, oxide of iron being formed. Pure spongy iron thus treated has for composition: $Fe = 91·42$, $C = 0·33$, $O = 8·25$ (Bell). In pure oxide of carbon spongy iron takes up as much as 23 per cent. of carbon (Bell).

The above considerations, which are purely theoretical, are interesting as showing the mechanism of the formation of cast iron in the blast furnaces, such as those of Leadville, in which the phenomena of lead and silver smelting take place jointly with those of iron smelting.

Reactions of Sulphides of Iron.—Pyrites existing in some ores, and sulphide of iron being formed in the furnace, the following reactions are interesting:—

No. 50. Protosulphide of iron and peroxide of iron act upon each other with formation of magnetic oxide and sulphurous acid:—

$FeS + 10\ Fe_2O_3 = 7\ Fe_3O_4 + SO_2$ (Percy, Hochstätter). To this reaction is probably due in part the magnetic oxide of mattes.

No. 51. Iron pyrites and oxide of lead react upon each other, give off sulphurous acid, and form a magnetic mixture of sulphides and oxides of lead and iron (Percy). In this instance the origin of mattes is clearly indicated.

Chemical Reactions of the different Zones.*—Fig. 81 shows a section of a furnace divided into zones of temperatures in accordance with the working of the same.

(1.) Zone 150° C. as the zone of gases.

(2.) Zone 150° to 465° C. is the zone of dessication.

(3.) Some important reactions begin in zone 570°, where the zone of decomposition begins, and are continued in zone 675° C. of reaction.

Oxide of lead acts on galena, sulphide of silver, and pyrites, and some sulphurous acid is evolved. Mattes begin to form. Oxide of lead acts on silica, and some silicate of lead is formed. In practice dolomites lose here a portion of their carbonic acid, but the supposition here is that dolomite behaves like carbonate of lime.

(4.) Zone of reduction, 780° C. In this zone the important reaction of reduction of lead takes place, and several more reactions are produced in consequence. Metallic lead acts on arseniate and antimoniate of lead, forming arseniuret and antimoniuret of lead, with regeneration of oxide of lead. Metallic lead acts also on sulphate of lead, with regeneration of oxide and evolution of sulphurous acid; all the reactions which have escaped completion in the upper zones are completed here. Metallic lead acts on galena, and subsulphides are formed. Sulphide of lead acts on sulphate and oxide of lead, with evolution of sulphurous acid and reduction of lead. Sulphide of lead acts on silicate of lead, and mattes are produced. Metallic lead acts on chloro-bromo-iodide of silver, and forms chloro-bromo-iodide of lead, which is volatilised with the chloro-

* A. Guyard, "Argentiferous Lead Smelting in Leadville."

phosphate of lead of the ore, and reduced silver alloys with lead, forming bullion. Sulphide of silver is partly acted upon by lead also, and some galena is regenerated. Chloro-bromo-iodide of lead acts on galena and volatilises a portion of this substance.

(5.) Zone 885° C. is one of the most important with regard to reactions. Silicate of lead acts partly on the magnetic oxide of iron formed, reoxidises it, and some peroxide of iron combines with silica. All the constituents of the charge are in a semi-fluid condition, and all possible compounds are formed here, some of which will be destroyed by thorough fusion in the lower zones. Sulphate of lead is acted on energetically by silica; all the reactions of zone 780° C. are produced here also with even more energy. Sulphide of carbon is formed and produces sulphides of silicium and magnesium. Some volatile chlorides of non-volatile metals are also formed. All the reactions which generate mattes are to be observed in this zone. In this zone also the quantities of carbonic oxide and carbonic acid are nearly equal. Hematite loses completely

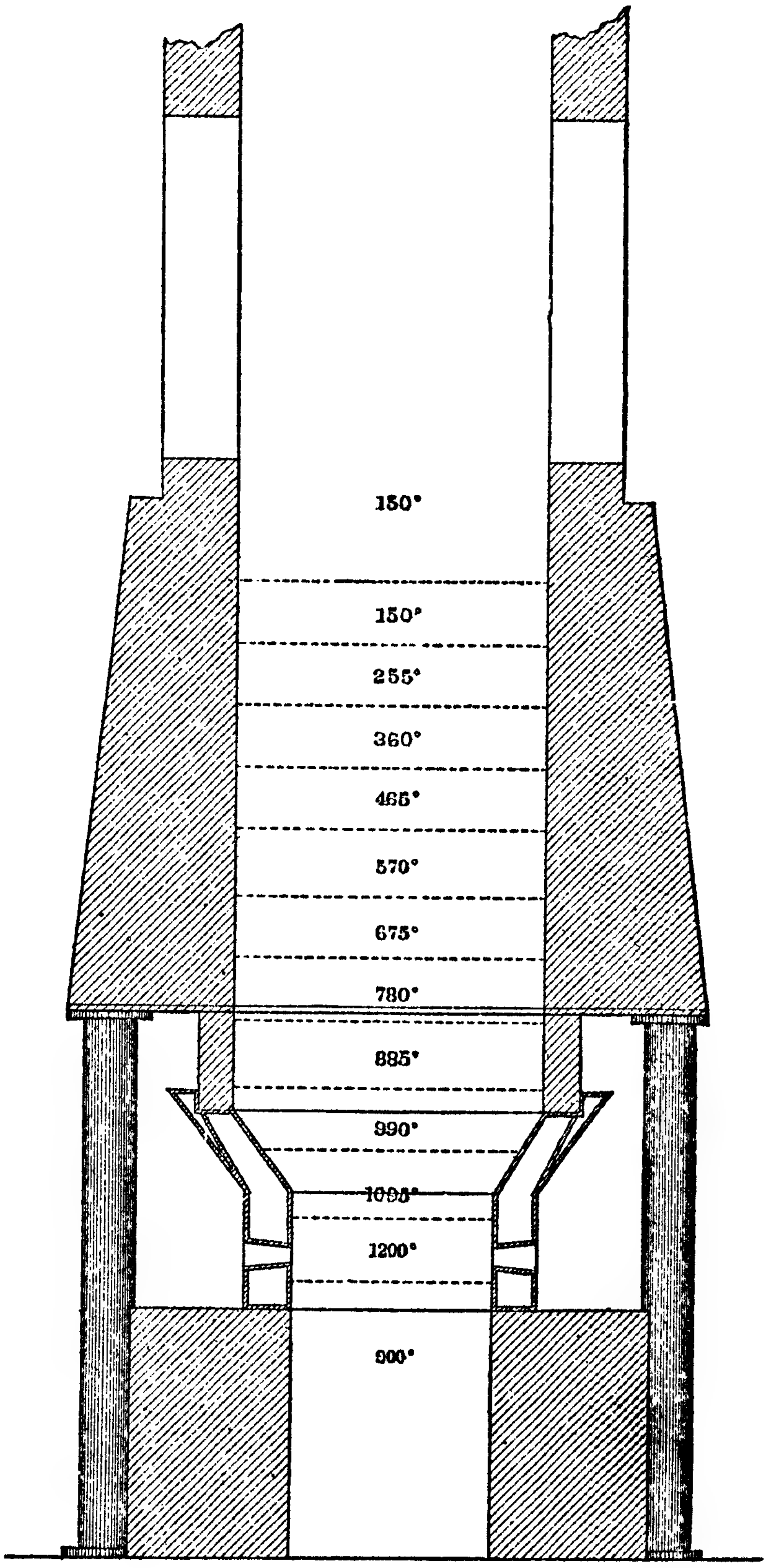

Fig. 81.—Section of Furnace Showing Zones of Temperature.
Scale, 1 inch to 5 feet, or $\frac{1}{60}$.

the carbonic acid of its carbonate of iron. Zinc, reduced in zones below, acts on galena, and sulphide of zinc is formed. This is a zone of reduction.

(6.) Zone 990° C. is one of very important reactions. Lime and magnesia being set free act energetically on sulphide of lead and pyrites, forming the sulphide of calcium found in the slag. Silica combines with lime, magnesia, and protoxide of iron, and slag is formed. Oxide of lead is expelled from its silicate. Phosphate of lead, which has escaped volatilisation, forms the phosphate of lime found in slag and accretions. This is a zone of semi-agglomeration.

(7.) In zone 1095° C. iron reduces arseniuret of lead, forming speiss, and sulphide of lead, forming matte. It acts also on oxide of lead, expelled from silicate, forming magnetic oxide of iron, which enters the slag and the matte. This zone is the zone of refining of bullion. It is here also that molybdic oxide is reduced and that iron and speiss combine with it. This is the zone of agglomeration.

(8.) The zone of 1200° is the real zone of fusion, combustion, and reaction by contact of solid matter.

(9.) The zone 900° is the crucible where the molten bullion collects.

Manipulation of Temperature in Furnace.—The temperature in the furnace depends on the nature of the fuel, the pressure of the blast, the height of the furnace, and the physical condition of the ore, if fine or coarse. The nature of the slag-forming ingredients in the ore determine the melting temperature of the slag. Mr. C. Henrich,* who has studied the question, makes the following remarks on the subject:—

"Those pieces of gangue rock, ore or flux in the charge, which have inside of themselves the constituents of a slag of a low melting point, will form such a slag already in the upper portions of the shaft of the blast furnace. This slag, as soon as it is liquid enough, will drop down in advance of the rest of the charge, at least in part, into the hotter lower zone of

---

* See "Engineering and Mining Journal," 27th December, 1890.

the furnace, and there combine with those parts of the charge, unsmeltable by themselves in the temperature obtained in the smelting, and gradually absorb these parts, and form ultimately the slag intended by the metallurgist. But at the same time other portions of these harder smelting pieces of the charge will undergo, before the tuyeres, or at a zone but little above the tuyeres, the process first indicated. That these phenomena or processes actually take place in the furnace can be easily observed on the as yet only half-melted masses obtained at every blowing out or drawing of a lead or copper furnace. In these furnace residues we find pieces of felsite, feldspathic rocks, and even rocks approaching quartzite in their composition, in incipient fusion or sintering; and on the other hand, we find such pieces half eaten away by the more fluid slag coatings, which evidently dropped into them. By breaking these pieces, we see the gradual transition of a highly basic slag into a very siliceous one, from the outside slag coating toward the unaltered inside of these siliceous rocks.

"I have observed, and want to call the attention of other smelters to the fact, that while the composition, and thereby the melting point of the resulting slag, determines the temperature which we can obtain only in slight excess above this point in blast-furnace smelting, if we do not want to increase our fuel quantity beyond all necessity and sense, still within certain limits it is possible to increase the temperature in the furnace even without increasing the amount of fuel or changing the composition of the charge. The method of doing this is based on what I have shown above as actually taking place in the furnace. As we charge in horizontal layers, and as the charge descends very regularly and evenly, as long as the furnace is running normally if we want to increase the temperature, we charge the refractory part of the charge first, and the fluxing part in a horizontal layer on top of it.

"For instance, if we have a very siliceous ore to smelt, and use a siliceous iron ore and limestone as flux, we would, to obtain an increase in temperature, charge the ore portion of each charge, as a horizontal layer, and on top of it the iron ore and limestone in another horizontal layer (usually the limestone first and then the iron ore on top), the idea being to let those parts of the ore which form a hard smelting slag heat the bottom and reach the zone of fusion slightly in advance of the fluxes, so as to form at first a harder smelting slag and thus increase the temperature. Of course, we cannot keep the fluxes from partly melting, and thus interfering with our purpose. But anyone trying this method will probably be astonished at its marked effect.

"Large charges if thus separated in a hard smelting portion, and a fluxing portion on top, would naturally result in a hotter furnace, and thereby economy in fuel. If charged in the reverse order, they would probably require more fuel to keep the furnace at the usual temperature, while, if charged mixed, as small charges usually are, there would probably be no difference observed in the results. I have no doubt that within proper limits large charges charged as above indicated, so as to obtain in the furnace the highest temperature obtainable with a certain slag composition, will result in this increased furnace temperature, and thereby in an economy in fuel or in better working results."

CHAPTER VII.

THE ROASTING OF LEAD ORES.

TREATMENT OF ROASTED ORES IN CUPOLA FURNACES—Heap Roasting—Stall Roasting—Kiln Roasting—Roasting in Reverberatory Furnaces—Fortschaufelungs-röstöfen — Roasting Furnace at Leadville, Colorado.

Treatment of Roasted Ores in Cupola Furnaces.—This method is employed to smelt argentiferous galenas containing earthy and metallic impurities. The roasting, when the ores are pulverised, can be done in reverberating furnaces, and when the heat is raised fusion commences; the quartz in the ore acts upon the bases forming silicates of the oxides of lead, of lime, baryta, &c., and the mass—consisting of these silicates and the oxide, the sulphate and the sulphide of lead—is drawn out upon the floor of the furnace, allowed to cool, and broken with a hammer into fragments suitable to be treated in a cupola furnace. This preliminary agglomeration of ores is practised in many instances.

Heap Roasting.—When the ores contain a large percentage of foreign sulphides, the roasting is sometimes performed in heaps in the open air. Ores which, besides foreign sulphides, contain a considerable percentage of silica, are also submitted to this process. Through the roasting a large portion of the sulphur is driven off, the lead is oxidised, and is afterward obtained in the smelting through the reduction of the oxides, and, owing to the smaller percentage of sulphur, the production of matte is diminished. With cupriferous lead ores, it is advisable not to roast too much, as it is better to concentrate the copper in a matte than to have it carried into the lead and produce an impure article. In heap roasting the ore, of course, is piled up in lumps of all sizes, and all the sulphur is not driven off. Besides undecomposed galena, lead sulphate is produced, which is again reduced to a sulphide during the smelting operation.

Although heap roasting is the oldest and most primitive method of getting rid of the surplus quantity of sulphur in the lump ore, we still find this method in vogue, both in the United States and in Europe.

The roast heaps should always, if practicable, be located on a higher level than the smelting furnaces to which the roasted ore has to be transported.

After carefully levelling out the place where the heaps are to be built up, the whole area is covered with fine ore to a depth of several inches, and on top of this a layer of wood, 6 to 10 inches thick, is placed. This wood is so placed on the ground as to leave channels, several inches in width, at distances 10 or 12 feet apart, and these are filled with brush-wood, chips, straw, and they all lead to one common chimney located in the central portion of the heap. This chimney is sometimes made of boards, but even sticks of firewood are built up so as to leave an enclosure 2 feet square, which is also filled with kindling wood and chips.

The ore is now brought in lumps of rather large size, so as to form a loose layer over the wood, and the remainder of the ore is piled on top of it to a height of 6 feet in the form of a truncated pyramid. The outer covering of the roast heap is made up of fine material, so as to confine the heat inside the pile. The dimensions of the heaps vary according to the quantity of ore which is to be roasted.

When the pile is set on fire care is taken to regulate the roasting by admitting the draught evenly and slowly. By perforating holes in the covering of the heap, especially in the direction of the wind, more or less air can be admitted into the heap. When the pile is burnt out, the half or insufficiently roasted lumps of ore are raked out and added to the next fresh pile; or the half-roasted lumps are accumulated from various roastings and new heaps built up of them. The time of roasting may last from one to three months.

Stall Roasting.—Stalls are enclosures of brick walls, which permit of a better concentration of the heat. Balling, in his "Metallhutten-Kunde," describes a stall introduced by Mr. Wellner, which is arranged for direct firing by means of separate fireplaces, several of which are arranged in a row against a common wall. Such a stall, as shown in Fig. 82, may be 10 metres in length and 5 metres wide, the surrounding wall being 2 metres high. On the front side are openings where the fireplaces are arranged, which can be closed by iron doors. The hearth slopes from the centre down to each side, one metre in each direction, and is made of bricks manufactured from slag, and placed on a foundation of pounded slag.

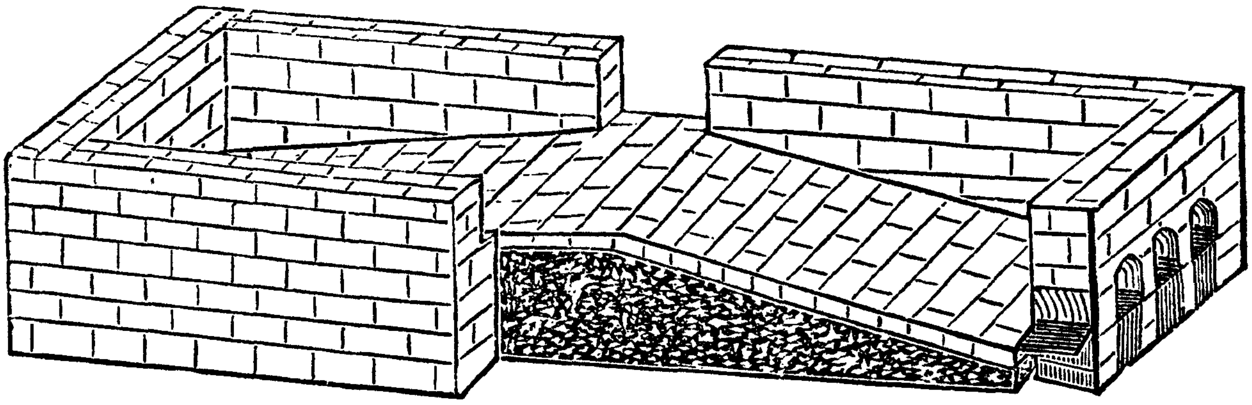

FIG. 82.—ROASTING STALL.

When the stall is charged with ore, there is first constructed out of the large lumps a sort of a channel, running from the three hearths half-way up the incline, which serves as a fireplace for the fuel; then the remainder of the stall is filled and covered with finer residues, and the fire is lit and fuel added till the lower portion gets so hot that the sulphur will maintain itself burning when the addition of fuel is stopped, and the roasting will be continued simply by the burning of the sulphur in the ore.

Kiln Roasting.—Lead ores are not adapted to kiln roasting, but the matte produced in lead smelting is mixed with lead ores containing foreign sulphides, and the mixture submitted to kiln roasting. This operation is often conducted in such a manner as to conduct the sulphurous vapours into chambers for the manufacture of sulphuric acid.

In some kilns the ore and fuel are mixed together, but in other cases the kilns are so constructed that the ore is heated from an independent fireplace, and the fuel is not brought in contact with the ore. Plattner, in his "Die Metallurgischen Rostprozesse," describes some of these kilns as used at some German establishments.

Kilns in which ore and fuel are in contact resemble the ordinary lime kiln, and can be employed for burning lime. Fig. 83 shows a kiln erected in the Royal Prussian iron works, in Upper Silesia. The shaft has a height of 14 to 18 feet, and the mouth a diameter of 6½ feet, the top of the brickwork being covered with iron plates. The widest portion of the shaft *b* is 7½ feet, and the fire-hearth *c* is 3 feet in diameter. These particular dimensions, however, need not be followed. The lining of the furnace *d* is of firebricks, which are separated from the ordinary outer brickwork by a casing of pulverised stone and brick. The fireplace *c* is composed of a number of

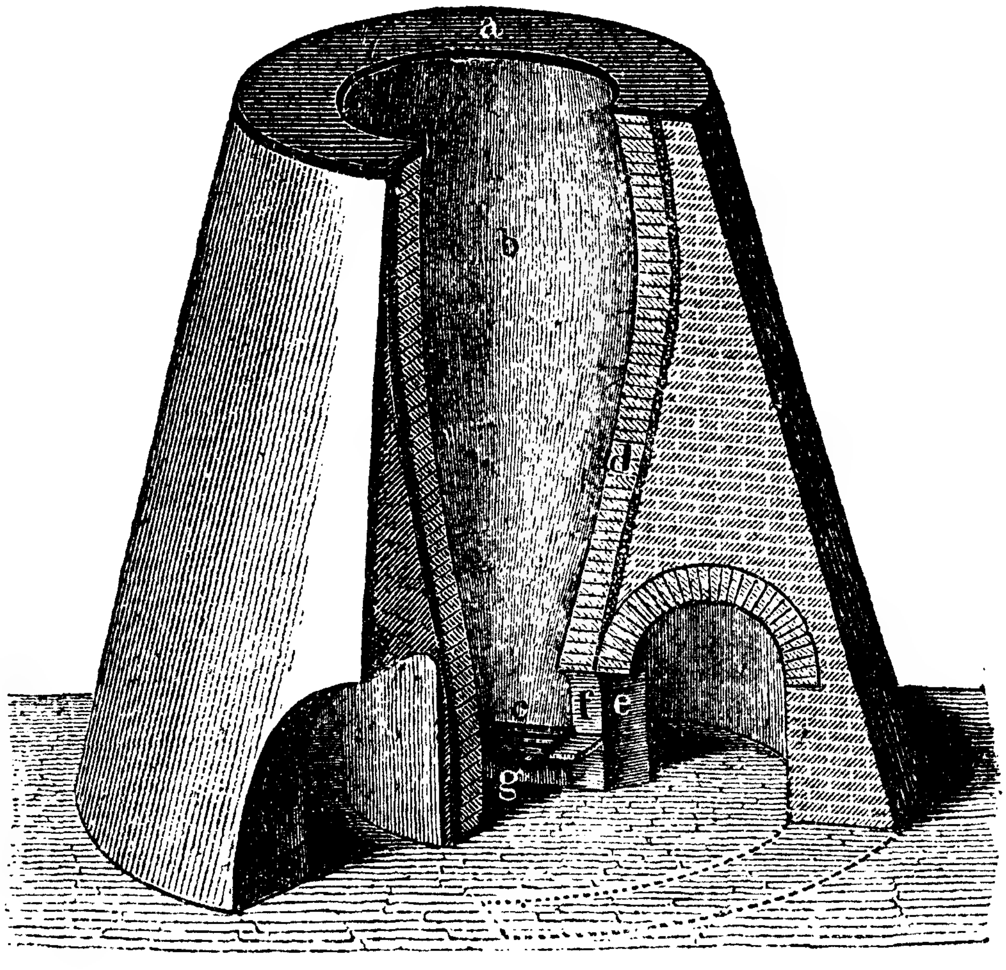

Fig. 83.—Roasting Kiln (for Ore and Fuel in contact).

iron grate bars which are placed on two heavy iron beams. There are two openings opposite to each other, one of which is shown at *e*, and at *f* is seen a portion of the arch opening in the lining of the furnace, where the ore is discharged. As seen in the drawing, there is a vaulted passage inside the lower part of the outer masonry which goes round the whole structure. The space *g* serves as an air-channel, not as an ashpit. The openings at *f*, which are walled up with bricks while the roasting progresses, are 1¼ foot high by 2 feet wide, and only when the ore is drawn are the bricks removed.

If the kiln is to be put into operation, the fire-grate is covered with tiles or bricks, between which spaces are left to allow the air to enter the furnace shaft. This covering not only protects the grates, but also prevents too strong a draught, as the discharge opening at *f* admits also air, even when walled up with loose bricks. On the tiles some dry wood is placed, then some coal, then alternate layers of ore and fuel to the top. The best fuel to use is coke and small coal mixed. The furnace is now kindled by lighting the wood on the hearth, and after twenty-

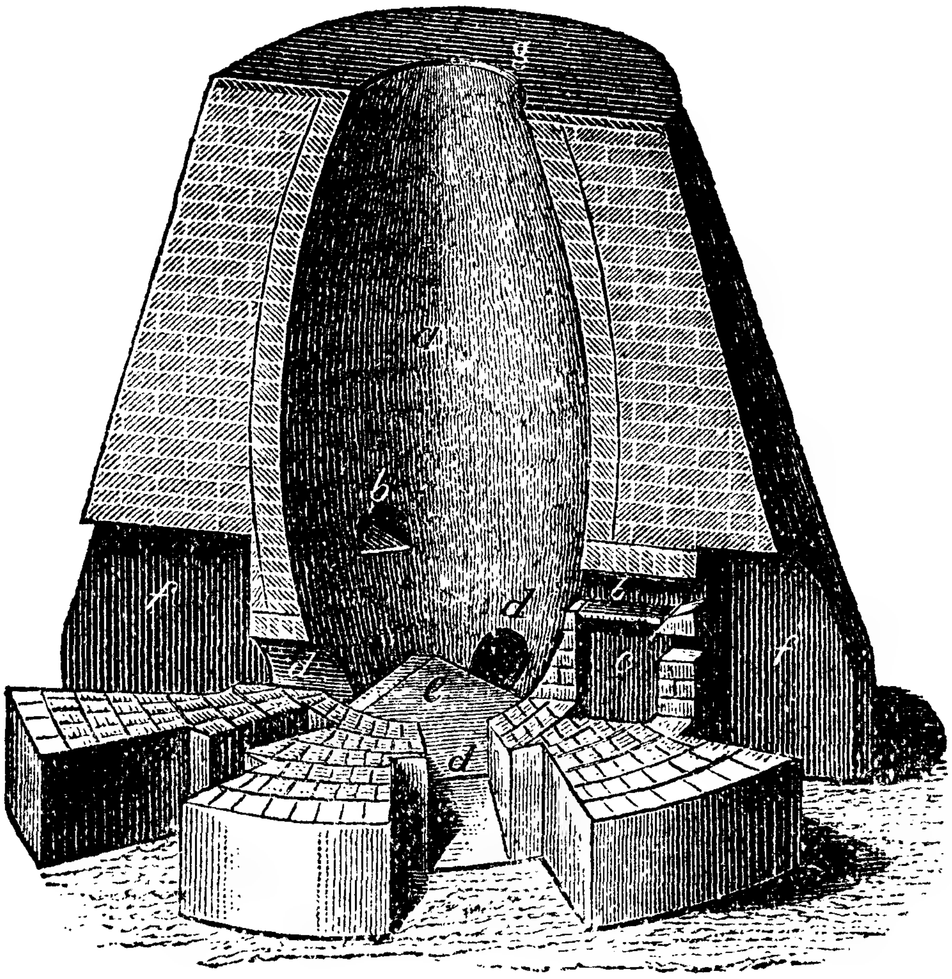

FIG. 84.—ROASTING KILN (heated from Fireplaces).

four hours' firing the ore commences to sink and the discharge holes are opened, the ore being withdrawn until unroasted ore appears; the discharge holes are then walled up again, and the furnace charged anew with alternate layers of ore and fuel, and after twelve hours it is discharged again. When the kiln is in full operation one half of it can be withdrawn every twelve hours.

In kilns which are heated from fireplaces, the fuel and ore are not put together into the shaft, but one or two fireplaces—or, in some cases, three, according to the dimensions of the kilns—are built in the outer walls and the flame conducted into the shaft, which, in no case, should be too high, as the ore would pack too tightly in a high column and impede the draft.

Fig. 84 shows a kiln of this kind, as described by Plattner, and by Karsten and Scheerer, having three fireplaces and three discharge openings. *a* is the ellipsoid shaft; *b*, *b* are the two fireplaces (the third not being shown in the drawing); *c* is the ashpit; *d*, *d*, *d* the three discharge openings; *e* is the bottom of the shaft, forming a three-sided pyramid, whose inclined sides facilitate the discharge of the material; *f*, *f* are arches giving admittance to the fireplaces and discharge openings.

The flame developed on the fireplaces, *b*, *b*, enters directly into the shaft of the furnace, whose height varies from the point of the pyramid *e* to the top from 14 to 18 feet, and its diameter on the top *g* and at the discharge openings is about 4 feet. To control the draught, the fireplaces and discharge openings, as well as the ashpits, are provided with iron doors. If the heat is found too high, the doors of the discharge openings are opened.

Roasting in Reverberatory Furnaces.—Ores which have been crushed fine and concentrated cannot well be smelted in blast furnaces, and in America such material is generally mixed with clay, formed into bricks, then sun-dried, and afterwards smelted in admixture with other ores and fluxes. In Europe, where the tendency is to do away with smelting in cupolas, and to keep to the air reduction and precipitation processes, it is customary to roast the ore in long furnaces, called *Fortschaufelungs-röstöfen*, and extract the lead near the fire-bridge.

Mr. Bruckner proposes a triple cylinder (such as I have described in my "Metallurgy of Silver") to take the place of these furnaces for certain roasting operations, but as the reduction of the lead could not be effected in his cylinder, I may suggest that the combination of a reverberatory furnace, provided with a sump, with two (or even three) Bruckner cylinders, might be found an advantageous arrangement. The heat and gases escaping from the reverberatory furnace into two or three Bruckner continuous cylinders would prepare the ore, by submitting it to a roasting process. The cylinders could be easily arranged in such a manner that, when the ore in the cylinder nearest to the reverberatory is sufficiently roasted, it would automatically feed the hearth of the latter. The second cylinder would serve as a preparatory roaster; and the farthest would be the drying cylinder, where the moisture from the concentrations would be driven off.

Fortschaufelungs-Röstöfen.—These furnaces are constructed either with a single or double hearth. In the latter, one hearth is above the other, and the heat passes from the lower through a flue to the upper hearth. In that case a railway track is laid along one of the sides of the furnace, and the workman mounts a little raised platform carriage, from which he stirs the ore in the upper hearth, another workman pushing the ore along from door to door, as the manipulation of the furnace requires attention.

The furnaces have a length from 40 to 90 feet, and are capable of roasting up to six tons of ore. One charge—say of 1,000 lbs.—can be withdrawn in the forepart of the furnace near the fire-bridge every two or three hours; the ore behind it is then pushed forward, and the empty space near the flue is supplied with fresh ore. In this manner the ore is completely stirred up every two or three hours, by being advanced from one section to another until it comes near to the fire-bridge.

A complete utilisation of the heat is thus secured, and the ores

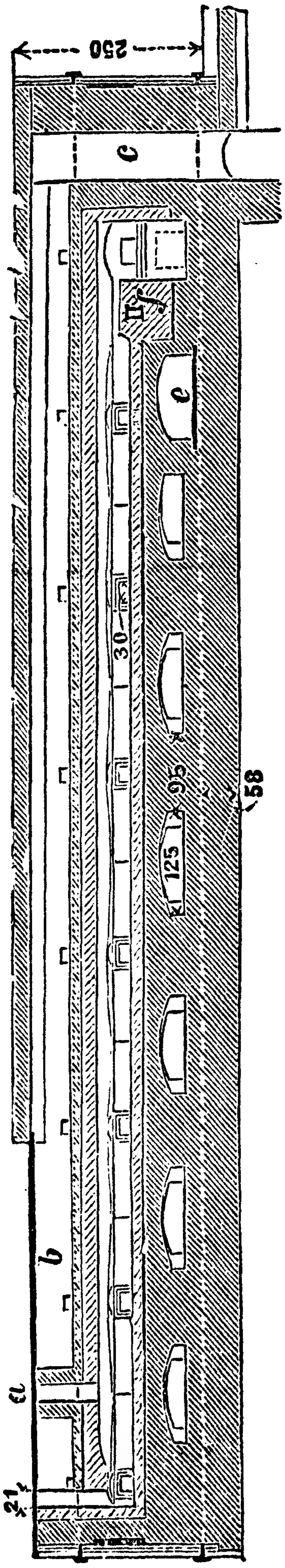

Fig. 85.

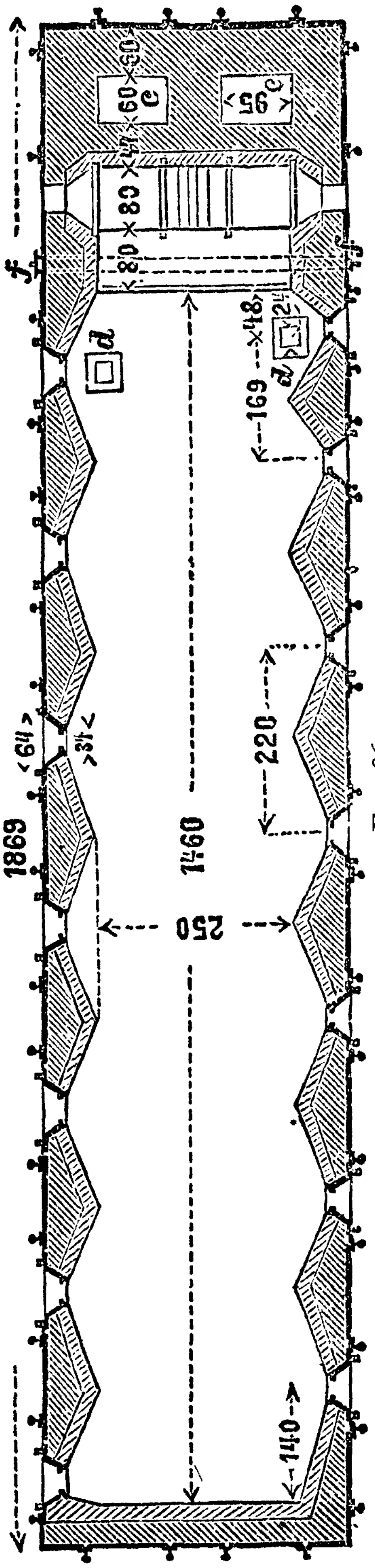

Fig. 86.

Scale for Figs. 85—87.

Fortschaufelungs-Röstöfen.

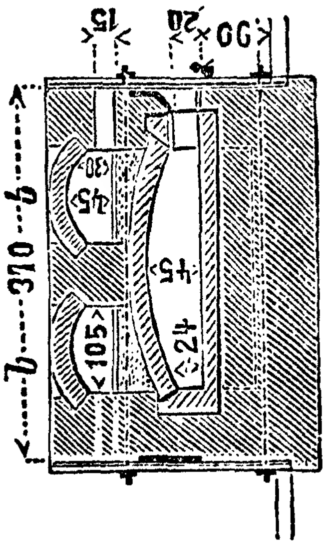

Fig. 87.

also are gradually prepared, as the farther the furnace is from the fire-bridge the cooler it is.

Balling describes a furnace of this kind, in use at Przibram, which is shown in Fig. 85, being about 48½ feet in length and 8⅓ feet in width. It will contain 7,000 lbs. of ore, and every six hours one charge of 1,000 lbs. is drawn. The furnace, therefore, yields 4,000 lbs. daily. There are consumed 35 to 38 kilos. of coal per 100 kilos. of ore.

In the illustration, *a* is the charge opening; *b b* are two flues for the escape of the gases, which through *c* are led to dust-chambers; *d d* are openings in the hearth covered with fire-clay tiles, which are lifted up when the ore is to be discharged into an iron car placed under the vault *e*; *f* is an iron conduit through which water circulates, for the cooling of the fire-bridge.

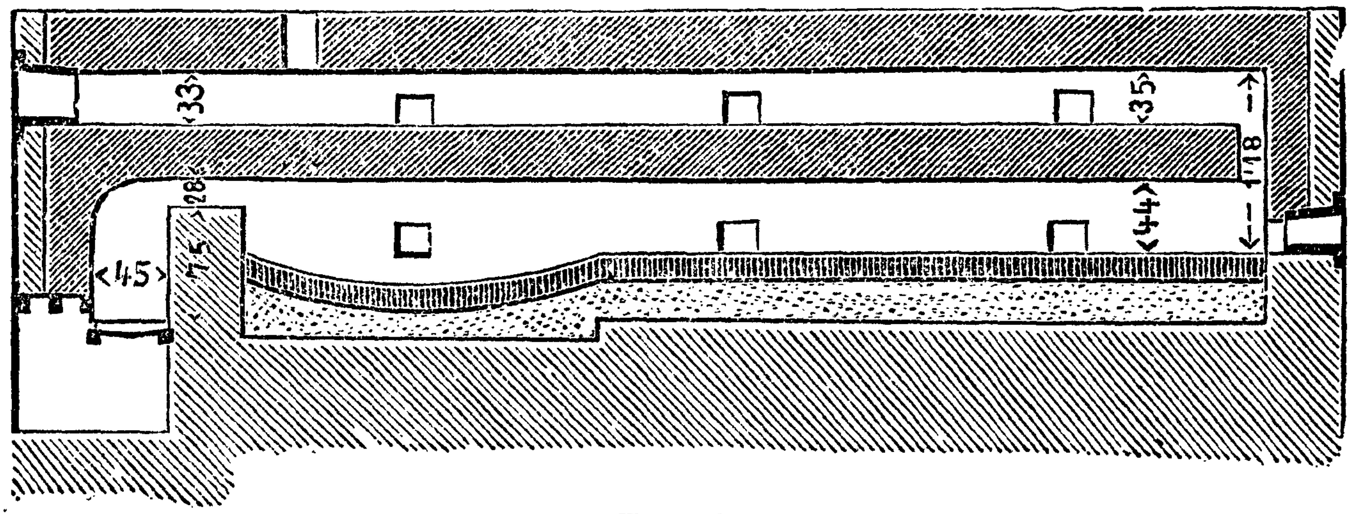

FIG. 88.

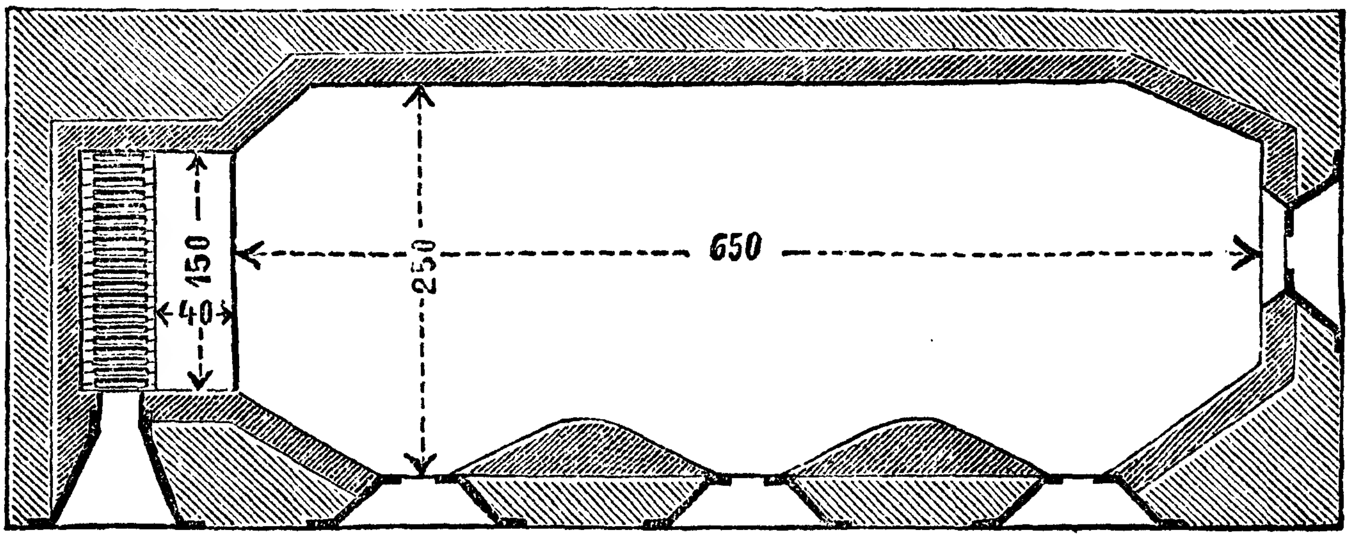

FIG. 89.
DOUBLE-HEARTH ROASTING FURNACE.

Figs. 88 and 89 show a furnace with double hearth in use at Bensfeldhammer. In this furnace, after the ore is roasted, the lead extraction can be effected in the sump near the fire-bridge, as shown in the cut, Fig. 88. The working doors of the upper hearth are opposite to those on the lower one. Each hearth is charged with 1,800 lbs., and every six hours 600 lbs. are discharged, or 2,400 lbs. per day. The consumption of coal is 550 lbs. daily.

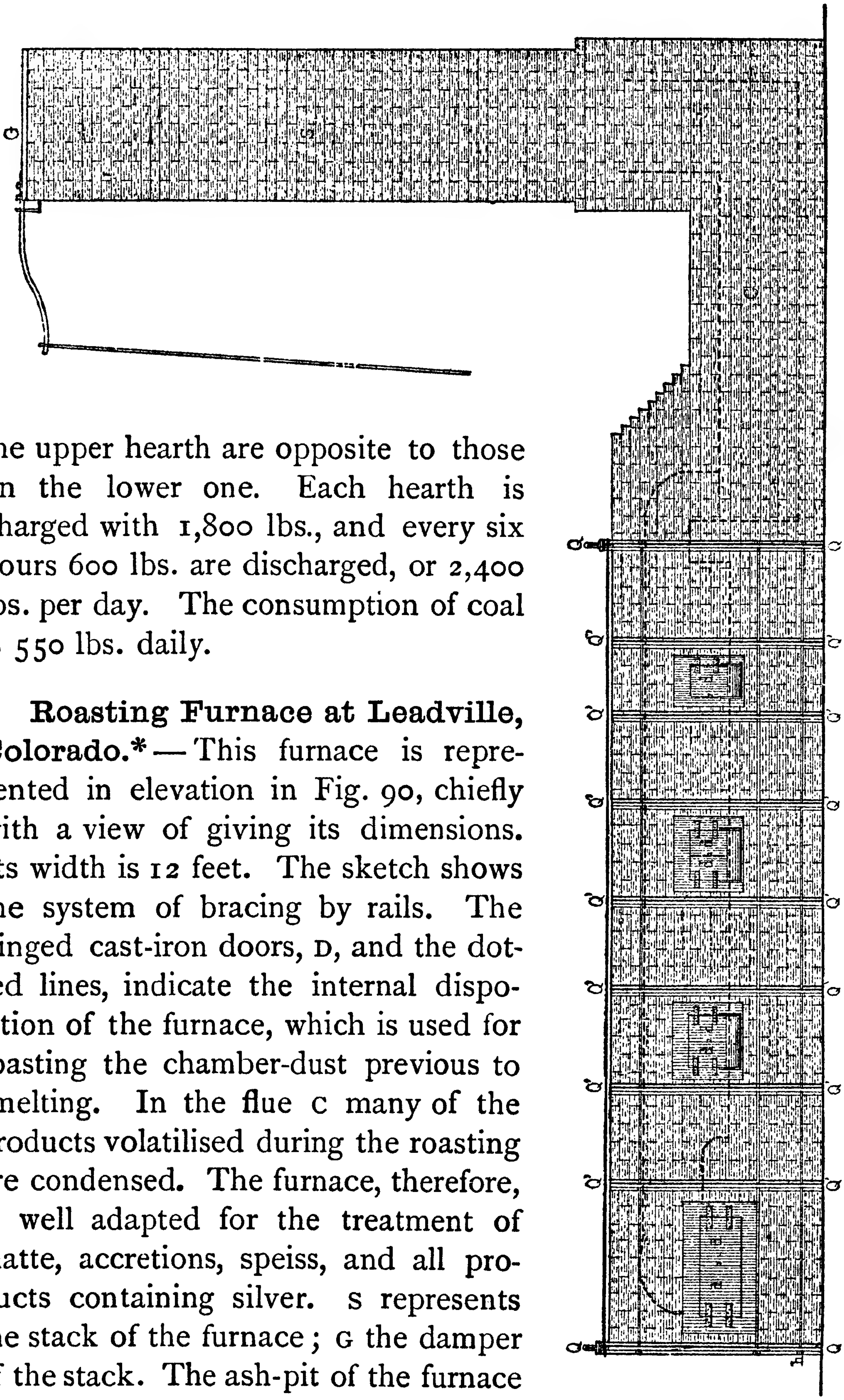

Fig. 90.—Roasting Furnace at Leadville, Colorado.—Scale, 1 inch = 6 feet.

Roasting Furnace at Leadville, Colorado.[*] — This furnace is represented in elevation in Fig. 90, chiefly with a view of giving its dimensions. Its width is 12 feet. The sketch shows the system of bracing by rails. The hinged cast-iron doors, D, and the dotted lines, indicate the internal disposition of the furnace, which is used for roasting the chamber-dust previous to smelting. In the flue C many of the products volatilised during the roasting are condensed. The furnace, therefore, is well adapted for the treatment of matte, accretions, speiss, and all products containing silver. S represents the stack of the furnace; G the damper of the stack. The ash-pit of the furnace is not visible, but is placed at H.

---

[*] Described by Mr. Guyard, "Mining Industry of Leadville, Col."

CHAPTER VIII.

PRODUCTS OF THE SMELTING OPERATION.

COMPOSITION OF BULLION—Skimmings—Slags—Chamber Dust or Flue Dust—Speiss—Desilverising Matte and Speiss—Probert's Process for Working Speiss—Mattes—Iron Sows or Salamanders—Accretions.

Composition of Bullion.—The quality of bullion varies a good deal at different smelters, and in a less degree from day to day at each smelter. At some works bullion is *soft*, with a clear surface; at others, more or less *hard*, with a scummy surface. The difference in the quality of bullion is due less to the difference in composition of the ores than to the care with which smelting is carried on. The same furnaces and the same ores will yield coarse or partly refined bullion, according to the rapidity with which the furnaces run, but chiefly according to the quantity of iron reduced during the operation, the metal being an excellent refining agent.

The charges for refining bullion being greater for coarse than for soft metal, it is evident that the smelters have a direct interest in obtaining from their furnaces a metal as refined as possible.

The following is an analysis of bullion from Leadville, made by Mr. Guyard :—

ANALYSIS OF BULLION.

Lead (by difference)	99·0798240
Silver	0·6112445
Gold	0·0000888
Copper	0·0479100
Tin	Faint trace
Bismuth	,,
Arsenic	0·0391365
Carried forward	99·7782038

ANALYSIS OF BULLION (*continued*).

Brought forward	99·7782038
Antimony	0·2138940
Iron	0·0063000
Zinc	0·0016052
Cadmium	Faint trace
Sulphur	None
	100·
Ounces of silver to the ton	178·275
„ gold „	0·026

Skimmings.—The following is an analysis, also made by Mr. Guyard, of skimmings collected in the syphon tap or lead pot of one of the furnaces in Leadville. It is interesting as showing that the skimmings contain, in larger measure, the metals which are found only in small quantity in the bullion, and thus more certainly proves their existence in the ores :—

ANALYSIS OF SKIMMINGS.

Lead	[? 92·9172]	97·9172
Silver		0·8657
Copper		0·0359
Bismuth		0·0160
Iron		0·4249
Cobalt		0·0087
Nickel		Faint trace
Zinc		0·0158
Arsenic		1·1875
Antimony		0·1147
Tin		0·0095
Sulphur		3·3400
Oxygen and loss (by difference)		1·0641
		100·

Silver, 252·5 ounces to the ton. Gold, not a trace.

In the skimmings, as in the bullion itself, part of the silver and some lead exists in the state of sulphides ; in fact, the skimmings are peculiar alloys of metals, sulphides, and oxides. Although cobalt was present in the ores, none of it could be detected in the speiss or in any of the other furnace products, mattes, accretions, &c. ; but the preceding analysis shows that it must be looked for in the skimmings. This curious fact illustrates a most interesting case of separation of nickel from cobalt by the dry way, and by a method hitherto unknown and unsuspected. Nickel, as will be seen, is concentrated in the speiss, and cobalt accompanies the bullion, from which it can easily be separated by the simple process of skimming. There would seem to be no reason why this simple process should not be used in the metallurgy of nickel and cobalt; for no cobalt is found either in speiss or bullion. When the skimmings are cupelled, the presence of cobalt is revealed by the formation of blue specks of phosphate of zinc and cobalt.

The skimmings are covered with a crystalline yellowish-black scum, from which they cannot be separated. When they are broken to pieces the pieces are found to be crystalline, with a white metallic lustre, similar to lead. These pieces flatten under the hammer, but the flattened portions are very brittle, with a crystalline structure and a blackish colour, due to small but very distinct crystals of galena.

Slags.—The slags produced in lead-mining operations at Leadville, Colorado, have been made the subject of special research by Mr. Guyard. "The term 'slag' (he says) seems appropriate to designate the strange products which flow from the blast furnaces during the process of lead smelting. These products are sometimes masses of large intersected crystals, brittle, with a vitreous lustre; sometimes fine-grained, tough masses, with a dull fracture, but always dark coloured and opaque. On the other hand, the word *scoriæ* ought to be adopted for translucent and transparent slags." Scoriæ are accidentally formed in the blast furnaces, having been found by Mr. Guyard in the cavities of iron sows. There is no doubt that they are regularly formed during the process of smelting, but are soon transformed into slag, so that only slag flows from the furnace.

A rough qualitative examination was made of scoriæ found intimately mixed with iron sows. The colour was that of pure blende; they were translucent—almost transparent; contained no sulphur; and consisted almost exclusively of silicate, of protoxide of iron and manganese, with traces only of lime and magnesia. This accidental product, which probably no one else had ever perceived in Leadville, afforded a means of studying the nature of the reactions which take place in the blast furnace, and which such accidents alone can reveal.

Slags are not scoriæ. They do not belong to the type of glasses, since they are opaque and crystalline. They are not artificial minerals, for they contain large quantities of sulphurets. Instead of belonging to some well-known type, they form one. It is only after a careful study of their nature and properties that it will be possible to attempt to give a satisfactory definition of these products.

Pulverised slag treated with the magnet almost always shows the presence of a magnetic portion which adheres strongly to the magnet. A slag beautifully crystallised in detached rhomboidal laminæ, with a steel-grey colour and an almost metallic lustre, which had been taken from the La Plata smelter, could be separated by the magnet into two portions, namely,

A strongly magnetic portion, amounting to	38 parts.
A feebly magnetic portion, amounting to	62 „
	100

But a rough examination, both quantitative and qualitative, of these two portions showed no great difference in the composition, and the investigation was carried no further in this direction.

The same slag finely pulverised and treated by weak sulphuric acid (acid 1, water 4) was rapidly attacked. Sulphuretted hydrogen was evolved, showing the presence of sulphides easily attacked by weak acids. The slag was, moreover, thoroughly disintegrated after a few hours. A large proportion of silica, iron, lime, magnesia, manganese, and zinc was dissolved. An unattacked residue was left; it was treated with weak nitric acid, which dissolved some sulphide of lead, formed evidently during the reaction, for it had the aspect of artificial sulphide of lead formed in the wet way. The residue was then boiled with carbonate of soda, which dissolved some gelatinous silica. A residue was still left; it was attacked a second time by weak sulphuric acid, weak nitric acid, and carbonate of soda. It is interesting to observe that after each successive treatment sulphuretted hydrogen was evolved, showing that the sulphides were undoubtedly combined with silica, or with silicates. After each treatment silica, iron, lime, &c., were dissolved. These treatments were repeated until the residue consisted of intensely black, fine, brilliant crystals, formed of pure magnetic oxide of iron, which was resolved into octahedra under the microscope. This oxide when analysed was found to contain—

Protoxide of iron	40·3
Peroxide „	59·7
	100·

The formula is $Fe_7O_9 = 3$ FeO, 2 Fe_2O_3, instead of $Fe_6O_8 = 2$ FeO, 2 $Fe_2O_3 = 2$ Fe_3O_4, the formula of ordinary magnetite. It contains one equivalent of protoxide of iron more than normal magnetite. In hematite has been found a magnetite containing an excess of peroxide of iron; here is found a magnetite formed in the midst of protoxide of iron, and containing an excess of this oxide.

One problem is solved—the slags are magnetic, because they contain free magnetite disseminated throughout their mass; the magnetite is not combined, since it can be thus isolated in a state of purity, and it is evidently to this substance that the intense black colour of slags is chiefly due. To this substance, also, they partially owe their capacity.

Magnetite can be isolated by a process much more simple, and more rapid than the one previously described. Sifted slag is attacked in a platinum vessel by a mixture of weak nitric and hydrofluoric acid; the solution is decanted, the residue is treated with a boiling solution of caustic potash, and the residue is washed with water and weak hydrochloric acid. In a few minutes pure magnetite is isolated.

The pulverised slag is treated by a boiling solution of caustic potash; after a few minutes' ebullition the potash is charged with sulphide of potassium, and in a few minutes more it takes the rich yellow colour of persulphide of potassium. Only one among the sulphides that can possibly exist in the slags is capable of producing this reaction; it is sulphide of calcium. The existence of this sulphide, which has long been suspected, and often reported, is demonstrated here beyond a doubt. Whether all the sulphur of slag exists in the shape of sulphide of calcium is another question. That most of the sulphur is in that condition there is no doubt, but from the general behaviour of slag Mr. Guyard is almost inclined to think that small quantities of sulphides of iron, manganese, zinc, and even lead exist there also. A great number of experiments were made to ascertain this, but in every case the presence of metallic sulphides might be attributed to secondary reaction, so that they will not be described.

The pulverised slag is treated by a strong solution of cold potash. A considerable quantity of oxide of lead is dissolved; consequently there can be no doubt as to the state in which lead exists in slags; it is in the state of silicate of oxide.

Slags contain always a little chlorine, the quantity of which is proportionate to the quantity of silver found; hence there is little doubt that silver exists in the slag in the state of chloride which has escaped decomposition. This fact is important, because it explains why there is no relation between the quantities of lead and silver found in slag. The slag in indistinct but large crystals behaves with reagents exactly like the distinctly crystalline one. Magnetite can be extracted by the processes previously described, but this oxide, instead of being crystalline to the eye, forms an apparently amorphous powder. The non-crystalline fine-grained slags possess the same properties as the former. They are more easily attacked under the same circumstances and yield only traces of magnetite; yet they contain almost as much peroxide of iron as the former, but in this case peroxide of iron exists in the state of silicate.

Most slags in Leadville belong to the two types just described: the lustrous crystalline slag, known as acid slag, which may be defined as a silicate of sulphides and oxides coloured by magnetite; and the fine-grained non-crystalline slag, known as basic slag, which may be termed a silicate of sulphides and oxides coloured by sulphide of iron.

Chamber Dust or Flue Dust.—This dust is generally in the form of a coarse reddish or blackish powder, and full of very small particles of charcoal and coke. Their composition varies, but principally they contain 20 to 60 per cent. lead, 10 to 150 ounces silver, 15 to 20 per cent. silica, 10 to 15 per cent. iron, with all the other ingredients present in the ore.

Mr. Guyard made two analyses of flue dust at Leadville, with the following results:—

	Portion Soluble in Water.	
	Sample I.	Sample II.
Protosulphate of iron	·086500	·014700
Sulphate of manganese	·145000	·158020
Sulphate of zinc	·020200	—
Oxychloride of lead	·255850	·206310
Oxybromide of lead	·055000	·045400
Oxyiodide of lead	·003000	·002990
Chloride of calcium	·553000	·523390
Bromide of calcium	·175000	·174660
Iodide of calcium	·009000	·008510
Chloride of zinc	·120000	·118500
Chloride of aluminium	·055500	·010700
Chloride of magnesium	·090000	·082900
Caustic magnesia	·150000	·195000
Chloride of potassium	·050000	·140000
Chloride of sodium	·450000	·290000
Water	·585000	·912500
Total	2·803050	2·883580

	Portion Soluble in Acids.	
	Sample I.	Sample II.
Oxide of lead	17·816661	22·451750
Sulphate of lead	7·954000	8·898730
Phosphate of lead	1·059348	2·783600
Sulphide of lead	1·255000	8·215000
Chloride of lead	1·726700	1·725620
Bromide of lead	·185790	·185080
Iodide of lead	·004900	·004880
Chloride of silver	·142712	·132730

	Portion Soluble in Acids.	
	Sample I.	Sample II.
Bromide of silver	·037670	·035040
Iodide of silver	·002580	·002540
Gold	·000100	·000066
Protosulphide of iron	·400000	·200000
Protoxide of iron	7·855290	6·100000
Peroxide of iron	13·814050	11·491000
Oxide of bismuth	·015000	·101000
Oxides of indium, thallium, new metal	Traces	Traces
Oxide of zinc	3·795270	1·454000
Oxide of cadmium	·020000	·014000
Sulphide of manganese	·082380	Trace
Sulphide of zinc	·300000	,,
Oxide of manganese (Mn_3O_4)	1·903500	·750000
Arsenious acid	·233256	·120000
Oxide of antimony	·100000	·105000
Oxide of tin	·001500	·001500
Selenious and tellurous acid	Trace	Marked trace
Oxide of copper	·005000	·012400
Titanic acid	·008000	·034000
Alumina	1·655000	1·620000
Carbonate of lime	4·529600	5·473000
Lime	1·661024	—
Magnesia	·835119	1·303000
Carbonate of magnesia	—	1·464000
Total	67·699450	74·677936

	Portion Insoluble in Acids.	
	Sample I.	Sample II.
Silica (from slag and silicite of lead)	15·126553	9·704500
Silica (from quartz and refractory silicates)	2·407000	3·789000
Al_2O_3, Fe_2O_3, PbO, ZnO, MgO, CaO, K_2O, Na_2O (combined with SiO_2)	2·391447	—
Carbon (from charcoal, coke, and graphite)	9·240000	5·063000
Oxide of lead	—	·907000
Oxide of zinc	—	·100000
Arsenious acid and oxide of antimony	—	Traces
Baryta	—	·215000
Sulphate of baryta	—	Trace
Lime	—	·150000
Magnesia	—	·080000
Alumina	—	1·007000

	Portion Insoluble in Acids.	
	Sample I.	Sample II.
Peroxide of iron	—	·600400
Oxide of manganese	—	Trace
Titanic acid	—	·001000
Potash	—	·035000
Soda	—	·025000
Graphite	—	·665000
Total	29·165000	22·332900

SUMMARY.

Portion soluble in water	2·803050	2·883580
,, ,, acids	67·699450	74·677936
,, insoluble in acids	29·165000	22·332900
Loss	·332500	·105584
	100·000000	100·000000

Although a great many substances are carried away physically in virtue of their volatility, and others mechanically by the force of the blast, it seems pretty clear from the result of these analyses that some very complicated reactions take place in the furnace, by means of which some substances are carried away in the state of volatile compounds and deposited in the dust in their original non-volatile form. In all probability copper, titanic acid, tin, aluminium, magnesium, and silicium are carried away in the state of chloro-bromo-iodides and sulphides formed by the action of chloro-bromo-iodide of lead and silver, and of sulphide of lead in presence of carbon, on the non-volatile oxides. The volatile chlorides and sulphides thus formed are afterwards decomposed by water, when the steam which accompanies the fumes condenses. These reactions, Mr. Guyard says, might appear doubtful from the examination of the chamber dust alone, but are forcibly demonstrated by the analysis of that portion of the fumes which is not condensed and which escapes into the atmosphere.

Speiss.—This product is formed when the ores contain arsenic, which metal combines with iron to form arsenide of iron; and as it is specifically heavier than matte, it forms a thin crust between the matte and the lead. It presents itself in foliated crystals of a whitish colour, and is very brittle. In it is generally concentrated any nickel or cobalt, if present in the ore; and the speiss also contains other metals like copper, antimony, lead, zinc, as sulphides. It forms a distinct product from the matte, from which it can be detached after cooling, and is easily distinguished by its physical appearance.

The examination of the Leadville speiss, made by Mr. Guyard, has shown that it is found in three distinct types:—(1) A white metallic-looking speiss, in large lamellar crystals, studded all over with very small, indistinct crystals; (2) a grayish sub-metallic-looking speiss, in fine crystalline grains; (3) a vesicular speiss. On sifting a sample of pulverised speiss it separated into—

Speiss powder	98·21
Lead grains	1·57
Total	100·00

The non-combined iron grains did not contain any arsenic, and were very tough; the lead also was very pure. The speiss powder was analysed. The sieve examination of speiss shows that (1) speiss type, No. 1, contains no free iron, and is a non-saturated speiss; (2) speiss type No. 2 contains just enough iron in excess to indicate that it is saturated with iron; (3) vesicular speiss, No. 3 type, contains a very large excess of free iron. It is a supersaturated speiss, whose fusion has been prevented by this excess of infusible iron.

ANALYSIS OF TWO SAMPLES OF SPEISS.

	Sample I.	Sample II.
Sulphur	5·8191	4·4695
Arsenic	31·4725	21·8003
Antimony	Trace	0·1450
Iron	60·5780	70·4780
Zinc	Faint trace	Trace
Silver	0·0085	0·0301
Gold	Faint trace	0·0009
Lead	1·4935	2·5030
Copper	0·3628	0·2566

ANALYSIS OF TWO SAMPLES OF SPEISS (*continued*).

	Sample I.	Sample II.
Nickel	0·0876	0·0981
Molybdenum	0·2110	0·2155
Loss	—	0·0030
Total	100·0000	100·0000
Silver, ounces to ton	2·48	8·7822
Gold „ „	Trace	0·26

The formula of the large crystalline speiss analysed in Sample I. is $(FeM)_6$ AsS, *m* designating the small quantities of metals accompanying iron, and the rational formula is probably represented by Fe_5As (FeM) S.

The fine grained speiss analysed in Sample II. is represented by the formula $(FeM)_9$ AsS, and probably by the rational formula Fe_8As (FeM) S. They are an arsenio-sulphuret of iron and other metals.

The speisses analysed by Mr. Guyard were remarkable on account of (1) the presence of antimony in such very small quantities, whilst it exists in the smelting charges, and is formed in no inconsiderable quantity in the bullion, the fumes, &c.; (2) the presence of molybdenum in each and sensibly in the same amount, showing how widely and evenly distributed this metal is in the Leadville mines (this is the first time that by any analytical research molybdenum has been pointed out in speiss: it is so thoroughly concentrated in this product that it was not possible to detect it in either bullion, slag, or fumes); (3) the total absence of cobalt, which, as has been observed, is concentrated in the skimmings of the lead of the syphon tap, and thus thoroughly separated from nickel, which, as the preceding analysis shows, remains in the speiss.

Desilverising Matte and Speiss.—It has been the custom in the ancient European metallurgical establishments to smelt the regulus with rich litharge and other rich lead products, and the metal and regulus from the furnace were allowed to flow at intervals into a receiver filled with poor lead. The flowing lead and regulus were well mixed into the lead, and, after the latter had risen to the surface and solidified, it was taken off in cakes and smelted again with material rich in lead, and finally converted into black copper.* In Germany this process is called "Eintränkarbeit."

In some establishments, as at Kongsberg, Narvay, the intermixture of the lead and regulus takes place in the smelting furnace. At Kolyran, in the Altai mountains,* in pyritic silver smelting, desilverisation is effected in a separate hearth provided with a blast common to two smelting furnaces. After the hearth has received its charge of molten regulus, charcoal is laid over the top and the lead placed thereon, so that, as it melts, it trickles down through the charcoal and the regulus, thus coming largely in contact with the latter. From 5 to 10 per cent. of pig iron, either granulated or in fragments, is put into the molten regulus, in order that, by liberating lead and silver therefrom, desilverisation may be promoted. The lead is added in four equal portions, by weight, successively, about 25 per cent. of the weight of the regulus each time; and after each addition the molten mass is poled with sticks of green wood, and the lead is tapped off.

Argentiferous regulus is more completely desilverised by smelting it with the addition of lead ores or lead-yielding substances; but on the other hand, the loss of lead, and of copper also in the case of cupriferous regulus, is considerably greater than when the "lead soaking process" is adopted.

The whole work is much simplified by the process which I will now describe, and which is in successful operation in the United States, where it is used for the desilverising of matte and speiss.

Probert's Process for Working Speiss.—Mr. Edward Probert, of San Francisco, has devised a method of working auriferous and argentiferous arsenides and sulphides of iron or copper, or other similar compounds into which litharge or lead

---

* Percy, "Metallurgy of Silver and Gold."

is introduced while in a state of fusion for the purpose of extracting the precious metals.

His invention consists in stirring the material under treatment, by means of elastic vapours generated by the action of the molten mass upon mineral substances within the receptacle in which the material is being treated, without the aid of any mechanical stirring by hand.

The success of this method of treatment by the introduction of litharge or lead into the molten mass depends largely on the thorough blending and admixture of the lead or litharge with the arsenides, sulphides, or reguline metals under treatment. Stirring by hand is a laborious, and at best an imperfect means of effecting the object in view, and in some cases an impossible one, as in that of the arsenides of iron, on account of the corrosive nature of the substances themselves, which rapidly destroy all implements of iron or steel introduced into them for the purpose of stirring. By Probert's method, mechanical stirring is rendered altogether unnecessary, and a much more complete mixing of the materials is effected.

He proceeds as follows: Iron pots of a conical shape, about thirty inches deep, thirty inches wide at the top, and rounded off at the bottom spherically to about twelve inches in diameter, each capable of holding fifteen hundred-weight (more or less) of the substance to be treated, are coated internally with a lining of refractory material composed, preferably, of decomposed or pulverised lava, pumice, or other volcanic rock, but when this is not obtainable, of siliceous sand with a certain admixture of finely-pulverised limestone or calcareous marl, to which has been added a sufficiency of clayed water, or milk of lime, to work the whole into a paste.

After laying on a coating of this material (intended, primarily, to protect the pot from corrosion by the substance to be treated) to the thickness of about three-quarters of an inch, a further portion of a specially-prepared composition, consisting of coarsely-crushed limestone, dolomite, siderite, or other suitable carbonate, mixed with a sufficient quantity of the ordinary composition with which the pot is lined to give it consistency, is laid on the bottom of the pot to the thickness of one inch, more or less. The pots thus prepared are placed in a suitable oven or a small fire is made inside each pot to dry he coating, which, however, is not to be baked so as to expel the last portions of moisture, but only so far as to remove the excess of water. When required for use, the pots thus lined and partially dried are placed in succession under the spout of the smelting-furnace containing the substance to be treated in a state of fusion, which is then tapped into them, while at the same time, or immediately afterward, a charge of lead or litharge, preferably granulated, is fed into each pot from a hopper conveniently placed above.

The first effect of the molten substance tapped from the furnace into the pot is to convert the small amount of moisture contained in the protective lining of the pot into steam, which, rising upward from the bottom and sides, causes a brisk ebullition in the molten material. This, however, is insufficient of itself to effect the thorough stirring and blending of the contents of the pot necessary to assure a successful result; but no sooner is this first ebullition due to the escaping steam over, than the limestone, dolomite, or other carbonate fixed in the bottom of the pot, as well as the calcareous matter in the whole lining begins, under the intense heat of the molten charge, to undergo calcination, and streams of carbon dioxide are sent off, which, rising upward through the molten matter, produce the effect of a small geyser, keeping the charge in a state of ebullition and agitation for a period of time proportionate to the quantity of mineral carbonate, or other source of carbon dioxide, originally used in preparing the pot, and thus effecting a complete blending of the ingredients.

The duration of the ebullition, and consequently of the stirring process, may be regulated to the time required—from five minutes upward—or as long as the molten material continues hot enough to exercise a calcining effect on the limestone; and inasmuch as the carbon dioxide produced comes off in a steady stream without sudden bursts, as from the vapour of water, there is no risk of explosion and consequent danger to the workmen. After the ebullition is over, the pot with its contents is set aside to cool, when the lead settles to the bottom, carrying down with it the precious metals, and when solidified the mass of alloy can be detached from the waste matter, and treated by cupellation in the usual way for the separation of the silver and gold.

It will thus be seen that the stirring is effected partly by steam—which, however, can never be made to do the whole work, being too violent in its action, and causing explosion when too much moisture has been left in the composition—but chiefly by the carbon dioxide or carbonic acid, developed during the calcination of the limestone or other carbonates employed as the source of gas or vapour.

Mattes.—Mr. Guyard, having made a thorough examination of the mattes of Leadville, has shown that they are formed of sulphides of iron and lead and magnetic oxide of iron. There are two typical kinds of mattes in Leadville:—(1) the so-called iron matte, with a fine crystalline structure and a brown lustre; and (2) the so-called lead matte, blackish gray, with a decided crystalline structure.

Both yielded to the magnet strongly magnetic particles, which were at first mistaken for magnetic sulphides. By rubbing the magnetic portion on filter paper, isolating with the magnet, repeating the operation several times, and finally treating it with nitric acid, in order to destroy some sulphides which adhere to it, the pure magnet oxide was obtained. Whether the adhering sulphides were magnetic or not could not be decided. The pure magnetic oxide was not analysed, but there is little doubt that its formula is the same as that of the oxide isolated from slags—namely, Fe_7O_9.

ANALYSIS OF MATTES.

	I. Iron Matte.	II. Lead Matte.
	Portion soluble in water.	
Protosulphate of iron	0·072000	9·058
	Portion soluble in acids.	
Protosulphide of iron	56·151956	37·446
Sulphide of lead	23·192307	36·912

ANALYSIS OF MATTES (*continued*).

	I. Iron Matte.	II. Lead Matte. Portion soluble in acids.
Magnetic oxide of iron	16·312500	22·826
Sulphide of zinc	1·706700	0·330
Sulphide of nickel	None	0·102
Sulphide of copper	0·347846	1·282
Sulphide of arsenic	0·290275	0·214
Sulphide of antimony	Trace	0·376
Sulphide of silver	0·334875	0·275
Sulphide of gold	Trace	Trace
Iron (combined with FeS_2)	1·360730	Trace
Slag	0·137000	0·140
Loss	0·093811	0·039
Total	100·000000	100·000

Lead and iron mattes are not the only mattes which form in the furnace. A third, which is much more interesting, may be called the calcium matte. This matte is formed, like its congeners, of a sulphide, sulphide of calcium, and of magnetic oxide of iron. This matte has not been found in an isolated state, but it exists in combination with scoriæ, and the product thus formed is precisely the slag of Leadville. So that the best definition of slags that can be given is the following :—Slags are compounds of scoriæ or silicates and of calcium mattes, and, like most of the furnace products, they are formed of chemical compounds crystallographically combined.

Iron Sows or Salamanders.—The sows, or small masses of reduced metallic iron, which are formed occasionally in the blast furnaces, on being analysed, prove to be a variety of speiss. A sample for analysis was taken from specimens of sows full of large cavities, filled with charcoal, coke, slag, scoria, and regular speiss, and was prepared for analysis by pounding bits detached from the sows until no dust could be obtained.

ANALYSIS OF IRON SOW.

Iron	72·82830
Lead	18·79340

ANALYSIS OF IRON SOW (*continued*).

Arsenic	5·08330
Nickel	0·04500
Cobalt	Faint trace
Manganese	0·01500
Antimony	Faint trace
Copper	,,
Zinc	,,
Molybdenum	0·16100
Sulphur	0·65000
Silver	0·11492
Gold	0·00003
Phosphorus	0·10905
Graphite	0·75000
Combined carbon	0·55000
Silicium, slag, loss	0·90000
Total	100·00000
Silver, ounces per ton	33·51750
Gold ,, ,,	0·00875

This analysis shows that the sows are an alloy of iron and lead combined with a quantity of arsenic sufficient to class them with speiss. Like the latter, sows contain nickel, molybdenum, and sulphur. Their graphite is liberated when their iron enters into combination with larger quantities of sulphur and arsenic, and is blown away with the lead dust where it has been found. Like supersaturated speiss, sows are very rich in silver.

Accretions.—There are two kinds of accretions formed in the blast furnace which have nothing in common—the hearth accretions and the shaft accretions. Hearth accretions are a kind of slag-matte, formed of slag, lead, and iron-matte, and very often they are composed of equal proportions of slag and matte. Shaft accretions result from the condensation of sublimated products. They form thick incrustations against the lower parts of the walls of the shaft of blast furnaces, and occasionally line the whole of the shaft. In appearance, they form a light crystalline fibrous and porous mass, with a lustre like galena, and full of cavities; they contain a large percentage of lead, which lead is evidently condensed vapour of this metal or sublimated lead intimately mixed with other sulphides.

The analysis of this substance shows a great similarity with chamber dust, the former representing products of sublimation, the latter products of volatilisation.

CHAPTER IX.

THE CONDENSATION OF LEAD FUMES.

CONDENSATION A NECESSARY PROCESS—Dry Condensation—Dust Chambers at Leadville—Condensing Flues at the Richmond Mine, Eureka—The Bartlett Filter or Smoke Catcher—The Cowper and Sopwith Condensing Process—Warwick's Condenser—Water Condensers—The Pontgibaud Condenser—Stockoe's Condenser—Griffith's Condenser—Condensation Chamber at Waterman, in Utah—The Muntz and Sharp Condensing Apparatus—The Panther Company's Condenser—Condensation of Fumes by Electricity.

Condensation a Necessary Process.—During the process of smelting, it is well known that to a certain extent lead and other metallic substances suspended in the gases or products of combustion from furnaces are deposited in flues, or large so-called dust chambers, and the longer the flue is made the more of the metallic substance is deposited. This deposit will take place only imperfectly and slowly, if the current or draught be too strong. The suspended matter will in that case be carried up and out of the chimney, as the material is very light, and settles by gravitation with difficulty, unless proper precautions are taken, not only to regulate the draught, but also to introduce artificial means to assist the collection of the fine mineral particles held in suspension by the fume and smoke evolved by the combustible.

Many devices have been introduced whereby the current of the fumes is so regulated as to prevent any scouring or carrying forward action on the fine mineral particles, and to permit of their settling quietly in the flues or dust chambers.

The loss which takes place through the carrying away consists not only of undecomposed fine particles of ore, but by far the largest portions of the fumes consist of metallic oxides and salts which have become converted into vapour by the action of the heat inside the furnace, and in that gaseous condition are carried upwards and out. On cooling, these vapours will condense, and if provision for effecting this condensation is made in closed receptacles they can be recovered most effectually.

Ores which contain antimony and arsenic, and, in fact, many other volatile substances, will so vitiate the atmosphere around the locality of smelting works as to produce a most pernicious effect, not only on animals, but also on vegetable life. The question of fume condensation, therefore, is not only a financial one, but also a sanitary problem of high importance.*

The condensing chambers or flues must be of considerable extent, so as to afford the gases plenty of chance to become cool, and at the same time offer large surfaces on which the mineral particles may settle. Of course a perfect condensation of all the mineral particles during a smelting operation can only be effected with very spacious chambers, so that the draught shall lose enough of its velocity to allow a settling of the dust in a comparatively still atmosphere, where the air is kept moving—first, by the continuous suction of the chimney, and the pushing action of the continuously fresh gases coming from the furnace.

In many cases water is utilised for the cooling of the gases and condensation of the dust, and condensers, therefore, may be classed as the *dry* and the *wet* condensers. In the first place the ordinary method of condensation by means of dust chambers without the use of water will be considered.

---

* Indeed, attention should not only be directed to the condensation of fumes from smelting furnaces, but something should be done in great centres, such as the city of London, towards effecting the condensation of the smoke which vitiates the atmosphere, and in London develops the fogs, of which complaints are so loudly made. It is to be hoped that legislative measures will one day assist in the solution of this important problem.

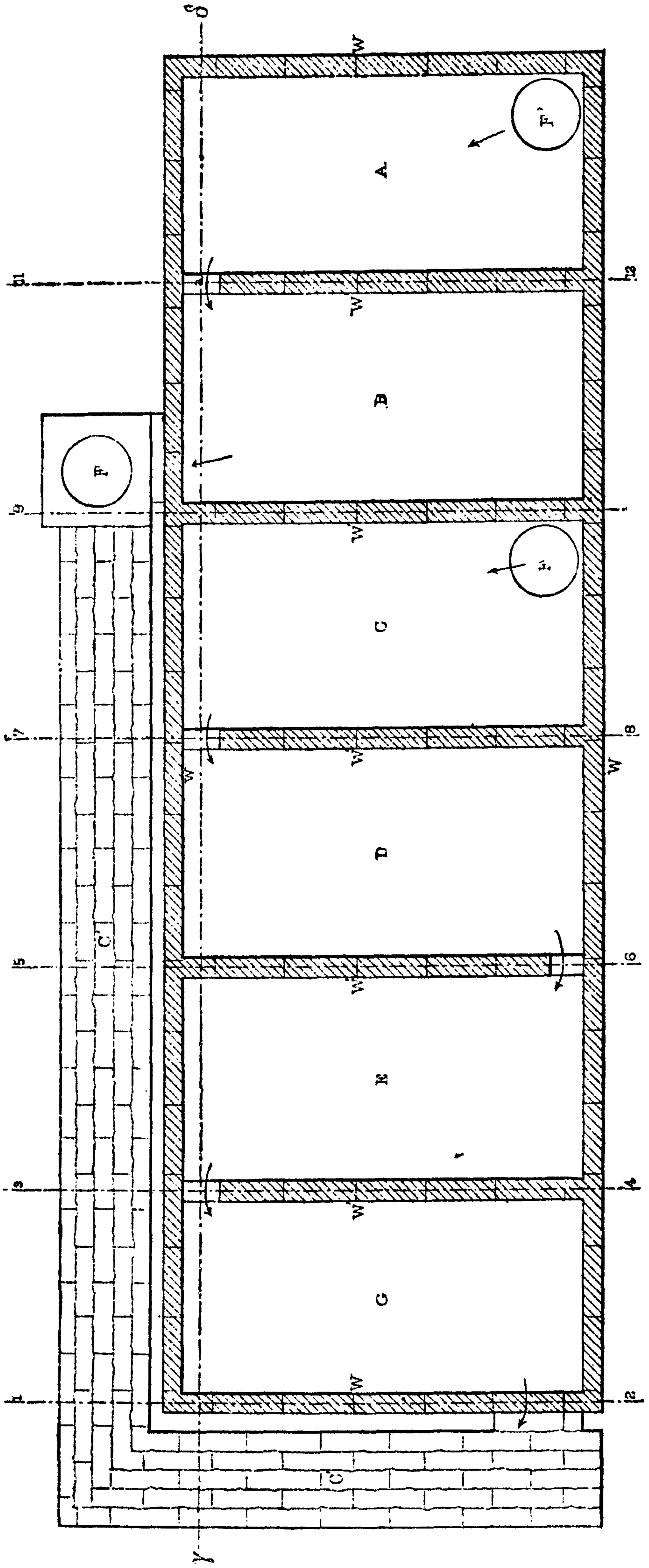

FIG. 91.—Section on *α β*.

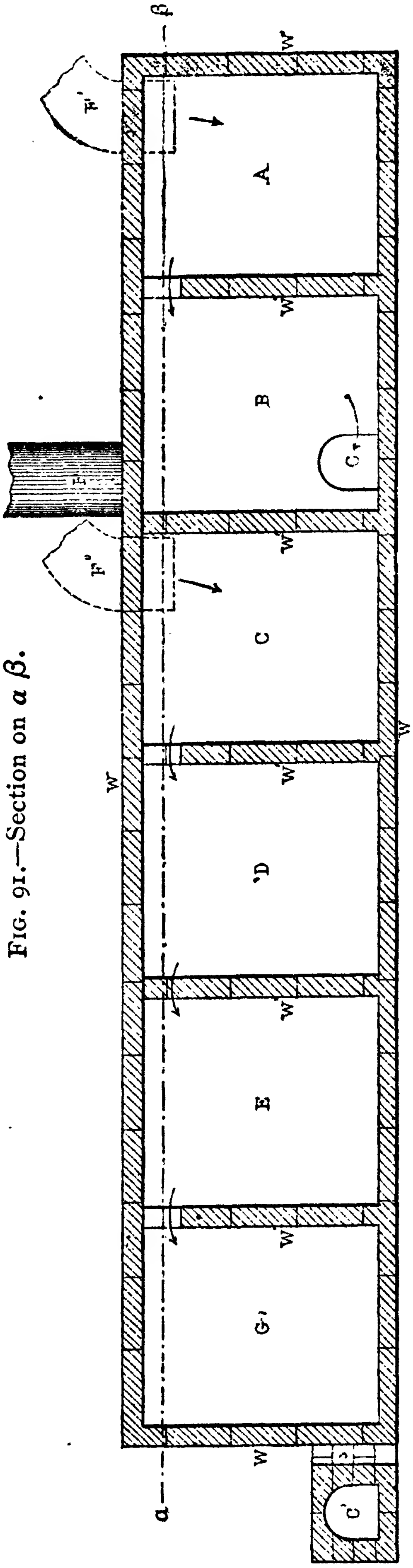

FIG. 92.—Section on *γ δ*.

DUST CHAMBERS AT LEADVILLE COLORADO.—Scale, 1 inch = 15 feet, or $\frac{1}{180}$.

Dry Condensation.—Dust Chambers at Leadville.— Where the condensation of the fumes resulting from smelting is effected in dust chambers, these are usually constructed of ordinary bricks or rubble masonry. Mr. Guyard describes an arrangement in use in Leadville of parallelopipedic form, 75 ft. long, 15 ft. high, and 25 ft. wide, with walls about 1 ft. thick. It is placed immediately below the feeding floor at the rear of the furnace. The details are shown in Figs. 91 and 92.

Fig. 92 is a vertical section, and Fig. 91 a horizontal section. These chambers are connected with two furnaces only, but were intended to condense the fumes of three; this explains the unequal allowance of condensing space provided for each furnace. The first furnace is connected with a chamber divided into two sections, A and B, by a wall, W′, provided with an aperture, *a* ; the fumes enter the chambers at F′, and reach the sheet-iron stack through C. The second furnace is connected by the flue, F″ with the chamber, divided into sections, C, D, E, G. The fumes circulate alternately up and down, and from right to left, until they reach the flue, C′, which takes them to the stack F.

The whole arrangement is far from perfect, but the fumes are made to strike the walls, and this seems to be one of the conditions essential to deprive them of their dust. The lighter portions of the fumes are carried away into the air and fall back occasionally on the roof of the building, which is covered with an impalpable yellowish-white dust. In each section of the chambers is a door for the extraction of the dust, which is moistened with water before being wheeled away.

Another style of dust chambers in use at Leadville, which is also described by Mr. Guyard, and is said to be the most elaborate and efficient in use there, is shown in Figs. 93 and 94. Each furnace is connected with a separate condenser, placed above the feeding floor.

The chimney of the furnace, A, is connected by means of the angular sheet-iron flue, F′ F″, which projects above the roof, V, of the building, with the lozenge-shaped sheet-iron chamber, M. The fumes strike against the sheet-iron apron, I, hinged to the upper part of the chamber which may be also used to regulate the draught by means o chain which passes through the wall of the chamber. After leaving the chamber, M, Fig. 94, the fumes circulate through the sheet-iron flue O, and then escape through the sheet-iron stack F.

In close proximity to the wall of the furnace, the flue F is provided with a sheet-iron branch, C, through which the flue dust falls into a wooden box, from which it is extracted at a door. Flues, F′, F″, are provided with sliding doors, not seen in the sketch, for clearing them of their dust. The

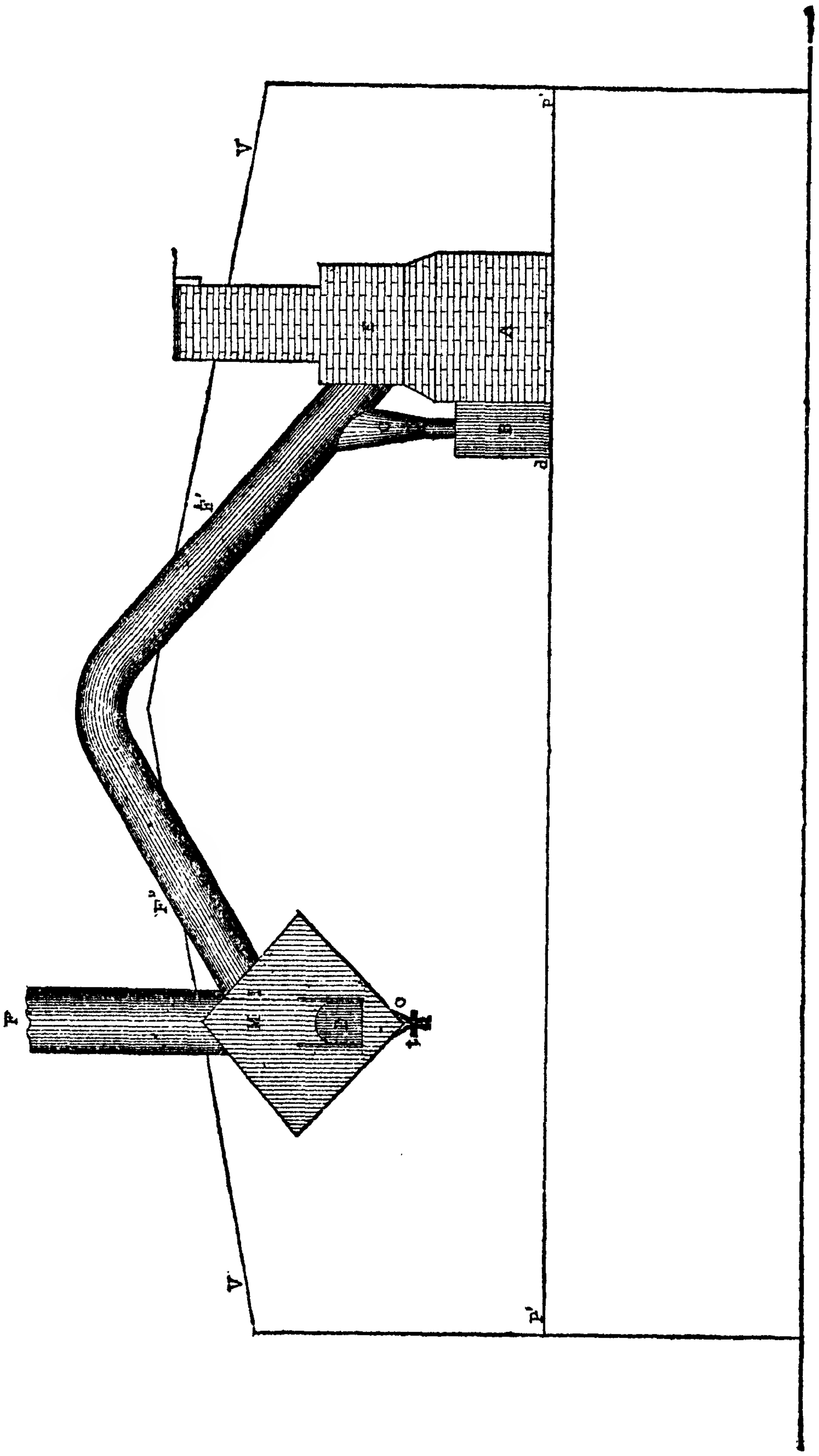

FIG. 93.—DUST CHAMBER AT LEADVILLE, COLORADO (another arrangement). Front Elevation. Scale, 1 inch to 16 feet, or $\frac{1}{192}$.

chamber, M, has also a large sliding door, D. This chamber, as well as the horizontal flue, O, and the stack, F, are cleared of their dust through the branches, C, provided with sliding

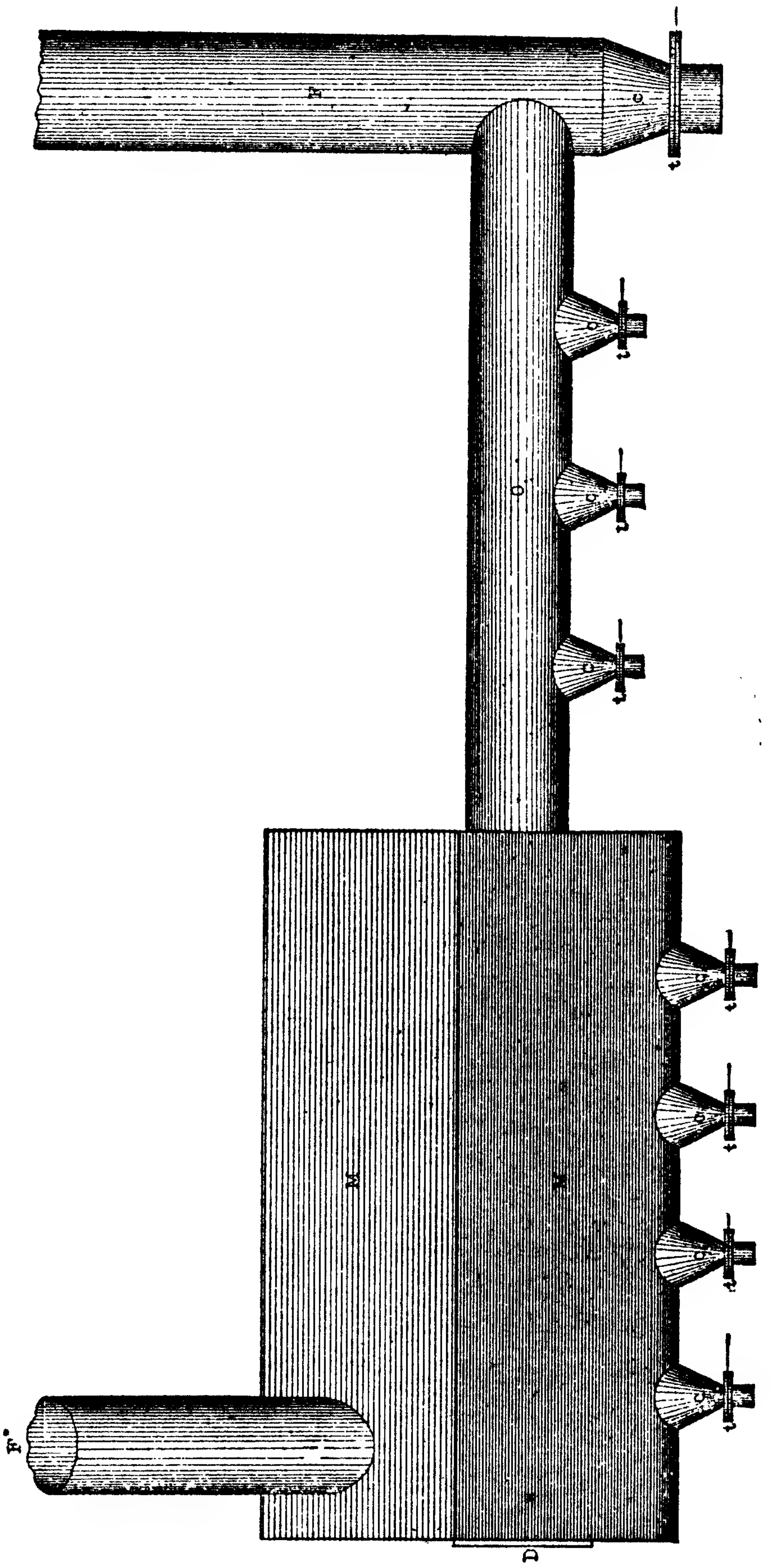

Fig. 94.—Dust Chamber at Leadville, Colorado.—Side Elevation. Scale, 1 inch to 8 feet, or $\frac{1}{96}$.

valves, *t*. The principle of ascending flues is in itself excellent, and the smoke which comes out at the stack is remarkably free from lead fumes.

Condensing Flues at the Richmond Mine, Eureka.—At the Richmond works in Eureka, Nevada, a flue 800 ft. long has been constructed, which ends in a wooden stack, 40 ft. high, standing on the side of the mountain behind the works, the top of the stack being about 200 ft. higher than the charge-doors of the furnaces. It receives the fumes from three large furnaces, which smelt 150 tons of ore (mostly fine) per day. For 250 ft. the flues, which run along the back of the furnaces and thence to the hill side, are constructed of strong sheet-iron plates, riveted together in the shape of a pentagonal prism, the two upper corners being slightly rounded off. By means of iron rods this part of the flue is suspended horizontally from wooden trestles, with the sharp angle downward. About 4 ft. below the lower extremity of the flue, a car-track runs along the entire length. At intervals of a few feet small sliding doors are inserted along one side and at its lower edge, so that by

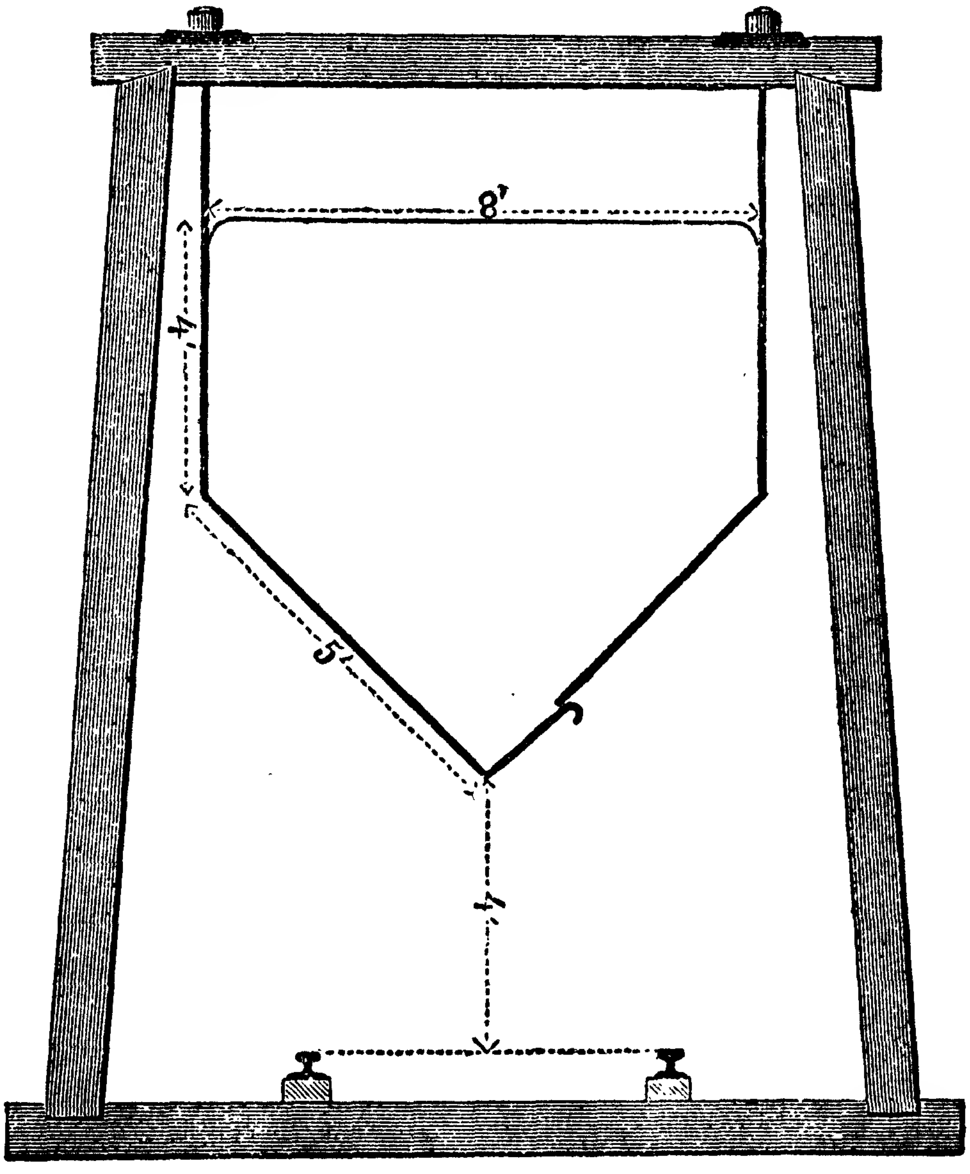

FIG. 95.—CONDENSER AT RICHMOND MINE, NEVADA.

opening the same the dust can be drawn into the car below. The size of the flue in this part is amply sufficient to receive all the fumes. Fig. 95 shows the size as well as mode of construction. Farther on, where the canal enters underground, it is still larger, being 9 ft. wide on top and 8 ft. deep; but from this point on, all the way up the hill to the wooden chimney, it is simply a culvert in the ground, without lining of any kind, and closed on top by a sheet-iron cover.

In 1873 the total loss at the Richmond works was 20 per cent. of the assay value of the ore; in 1874, after the flue had been put up, the loss was reduced to 12 per cent., of which a large proportion is accounted for in the speiss.

The flues are cleaned frequently for the first 250 ft. only; the portion underground requires this only at long intervals. Yet in the sheet-iron portion alone there are saved from nine to ten tons of dust per day, when three furnaces are running. The deposits obtained here invariably assay higher in the precious metals than the ore smelted, and if we assume its value as only 55 dolls. per ton, it is easily seen what an immense saving is brought about by this simple contrivance.

The Bartlett Filter or Smoke Catcher.—This apparatus has also been introduced in Leadville, where its operation has been attended with encouraging results. The arrangement adopted at one of the smelters is shown in Fig. 96. The stack, E, of one of the square furnaces, A, is connected by means of the sheet-iron flue, F′, with a Sturtevant fan, B, drawing the fumes from the furnace and blowing them through the sheet-iron pipe P, about 150 ft. long, where they part with their dust, as in an ordinary flue. The pipe P is connected by means of two sheet-iron branch pipes, P′, with two thin sheet-iron boxes, *a*, *a′*. Each branch pipe, P′, is provided with a damper or valve, exactly similar to those used in common stove pipes for the regulation of draught, so that the fumes can be distributed evenly in the boxes, or shut off from one and allowed to enter only the other. Each box is formed of two parts, the dust chamber, *a a′*, and the fireplace, N. The dust chamber is provided with sliding doors, O, placed at each extremity, and the fireplace with doors, *d*, placed in front, and sheet-iron pipes, L, at the back, which communicate with a stack, L′. The chambers, *a a′*, are provided at the top with

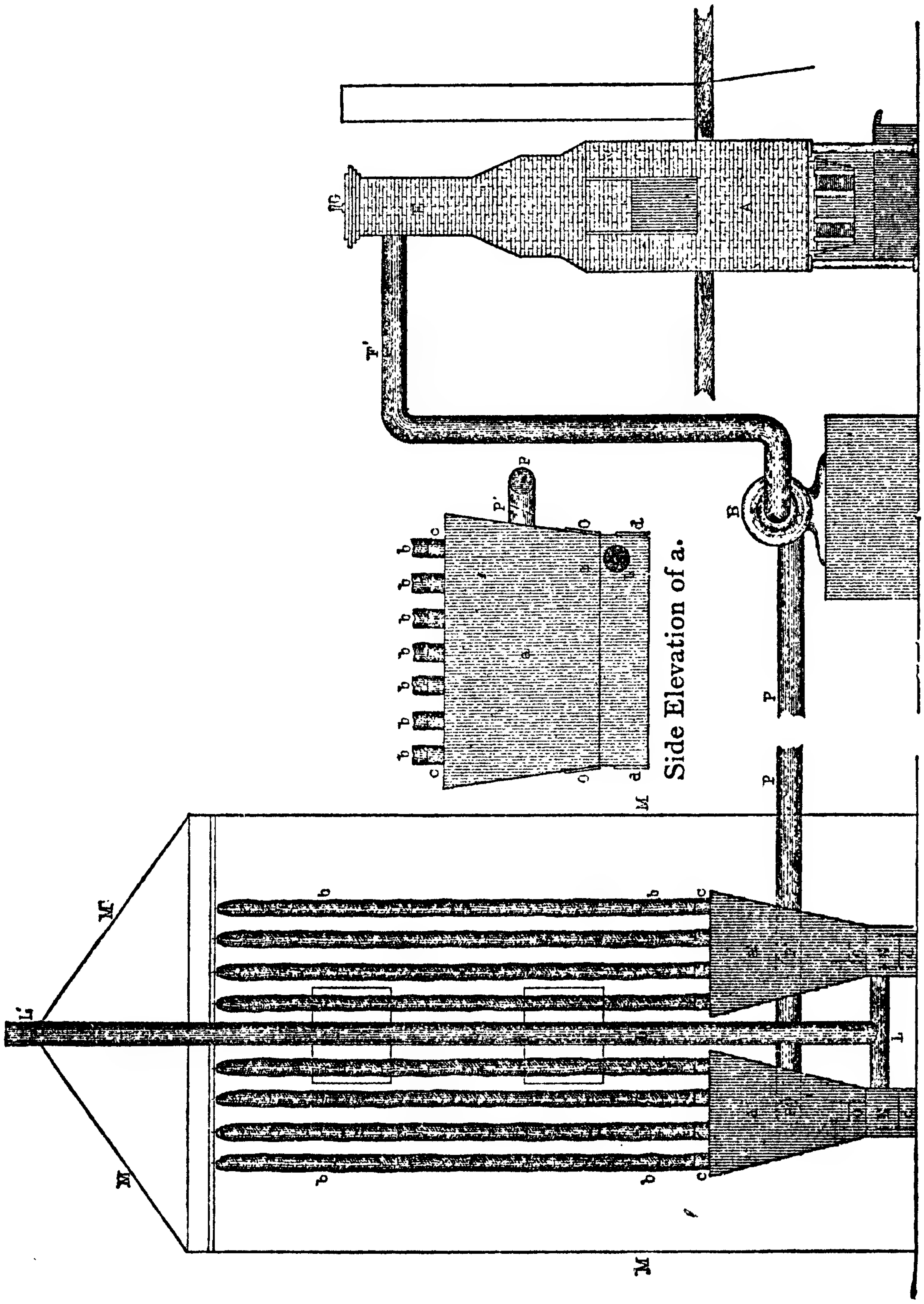

FIG. 96.—BARTLETT FILTER, OR SMOKE CATCHER.—Scale, 1 inch = 16 feet, or $\frac{1}{192}$.

twenty-eight apertures, to each of which is fastened a cloth bag, *b*, 30 ft. high, suspended to the beams of the light wooden structure in which the apparatus is enclosed. This building, M, is provided with very large openings for ventilation. When the apparatus is at work the fumes, blown in through pipes P P′, distribute themselves in the dust chambers, *a a′*, and ascend the cloth bags, through which they filter.

The gases come out perfectly colourless and are entirely deprived of any lead dust, or even soot. The wind, entering freely through the apertures provided in the light building, shakes the bags, and the dust with which they are charged falls into the dust chambers. When a sufficient quantity of this dust has accumulated the doors, O, are opened, and a light wood fire is placed through doors, *d*, in the fireplace, N. The soot of the dust soon catches fire, and the dust, which was quite black, like lampblack, becomes white; it becomes also denser by this operation, and is more easily manipulated. When the smoke has thus been calcined it is shovelled out through doors, O.

The Cowper and Sopwith Condensing Process.—An elaborate method of condensation has been devised and patented by Messrs. Cowper and Sopwith, of London, by which the course of the fumes arising from a furnace is carefully regulated before they reach the condensing chambers.

According to the inventors' account of the process the current of the fumes is caused to be so slow as to prevent any scouring action taking place, and in order to reduce the time required for the solid matter to fall, a number of shelves are placed inside the flue (preferably movable) at small distances one above the other, so that the suspended matter in each layer of the fumes has a very small height to fall. The movement of the current is retarded by passing the fumes through a number of flues, each subdivided by numerous shelves, and thus a very thorough deposit of the suspended matter is obtained in a comparatively short distance. The apparatus may be varied in its form and proportions to suit particular circumstances and situations.

A convenient arrangement is shown in the annexed illustrations: Fig. 97 is a half-plan showing a set of depositing chambers in connection with a central flue from a furnace.

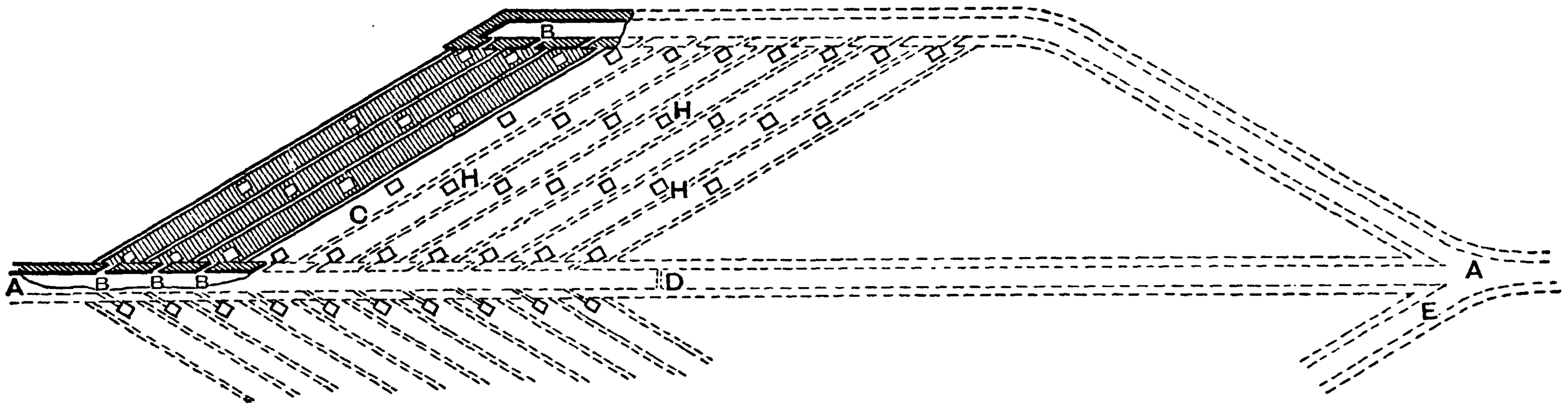

Fig. 97.—Plan.

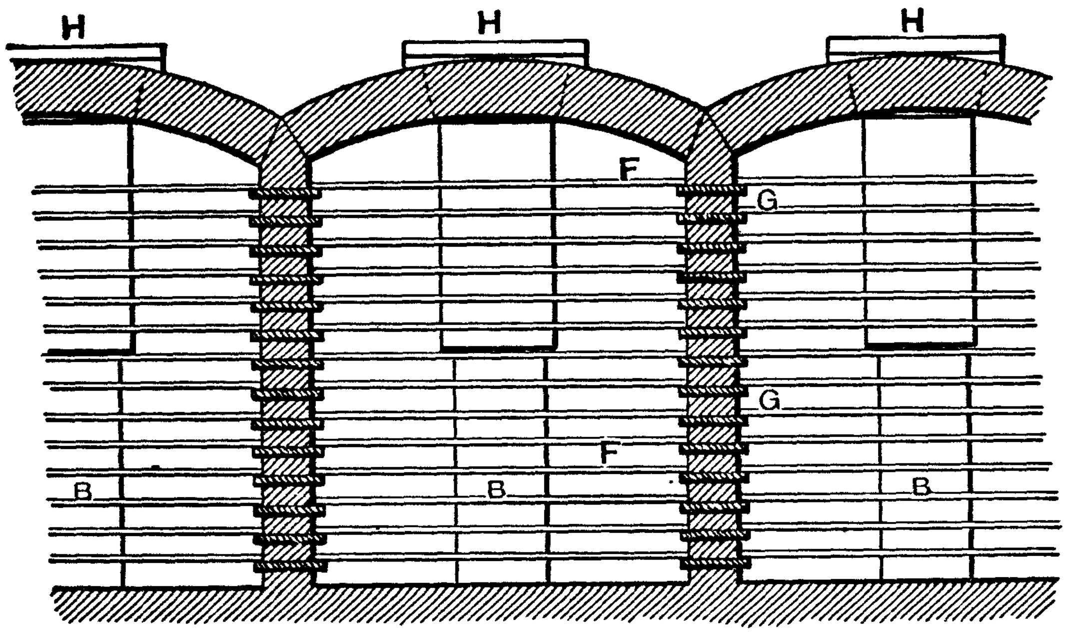

Fig. 98.—Transverse Section.

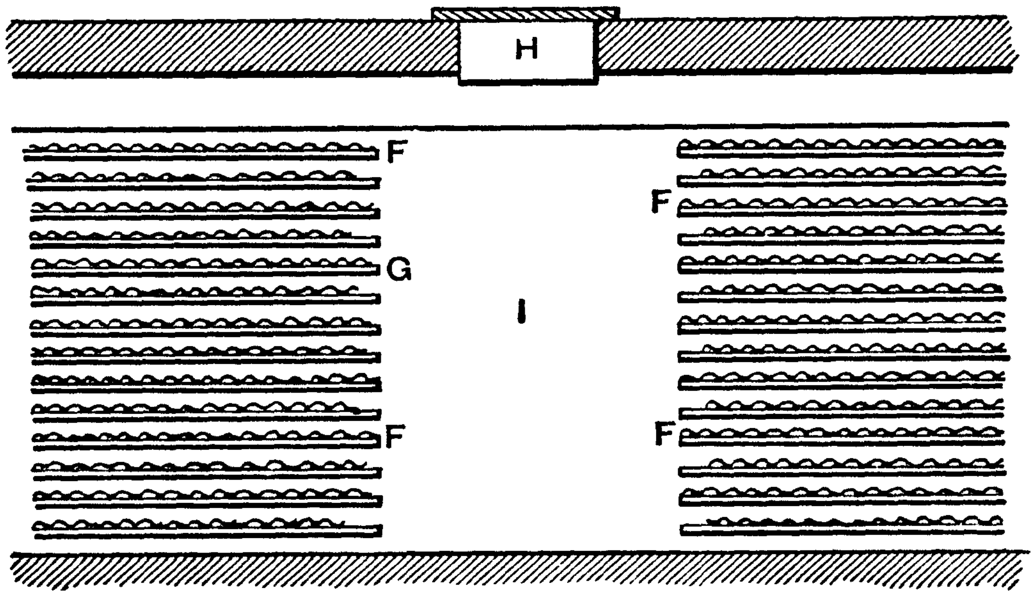

Fig. 99.—Longitudinal Section.

Cowper and Sopwith Condenser.

Figs. 98 and 99 are respectively transverse and longitudinal sections of part of the depositing chambers. The central furnace flue, A A, has at its sides numerous small passages B branching off from it at an acute angle, each of these passages leading into one of the depositing chambers C. From the opposite end of each chamber C there is a similar passage B^1 leading into a flue E which joins the main flue at A^1. In the main flue, beyond the last of the passages B, there is a valve or damper D, by closing which the whole of the fumes are caused to pass through the depositing chambers, and each of the inlets B, which is of small area, may be more or less closed by a separate valve or damper, so as to determine a very slow movement of the fumes through the chamber, or to exclude the fumes from any of the chambers when workmen enter them to remove the matters deposited in them. For the purpose of access there are manholes H in the roofs of the chambers, the manholes in each case admitting to a space, I, of convenient size for a workman to operate in. Between the spaces I the chambers are fitted with numerous shelves F, which may be, as shown, sheets of corrugated iron resting on fillets G projecting from the partition walls, each shelf being capable of being readily removed and replaced.

The fumes being prevented by the damper D from passing directly along the central flue, A A^1, find their way by the oblique passages B into the depositing chambers C, in which, in consequence of the enlarged area for their passage, they move very slowly. They are, moreover, subdivided by the shelves F into numerous very shallow layers, so that the matters suspended in them have to descend by gravity only a very small distance in each layer, and therefore become in a very short time deposited on the shelves, from which they are from time to time removed by workmen entering the chambers by the manholes H.

The further stages of the process are thus described :—

For the purpose of condensing the fumes, diaphragms of porous woven fabric—preferably such as is of a fibrous character, such as flannel—are arranged in a horizontal or inclined position, so that the fumes being brought under the fabric, the gases may pass upwards through it, and the deposit of solid matter which takes place against the underside of the fabric may drop off of its own accord by gravity on to the floor of the flue or chamber in which the fabric is placed. A sufficiently large extent of fabric is provided, and the upward current is caused to pass through it at an excessively slow rate, so that the fabric does not become choked by solid matter, and the natural draught of the chimney is sufficient without any mechanical blowing or forcing of the draught, or other artificial means being employed to increase the draught.

The apparatus is preferably placed at some considerable distance from the furnaces giving off the fumes, so that the temperature of the latter is considerably lowered before reaching it, but a further reduction of temperature may

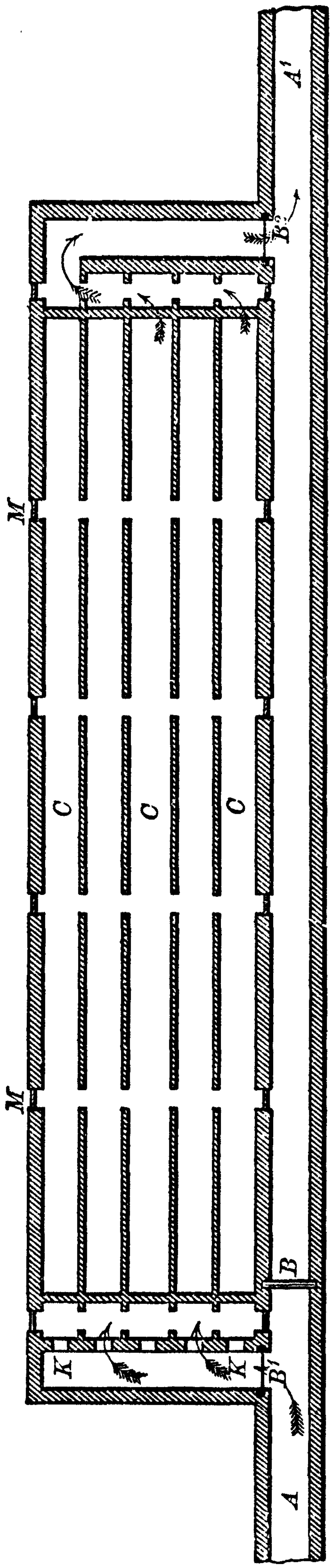

FIG. 100.—Sectional Plan.

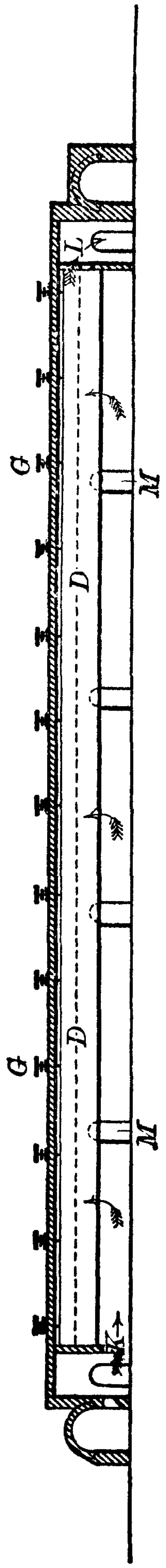

FIG. 101.—Longitudinal Section.

COWPER AND SOPWITH CONDENSER.

be effected by any ordinary means of cooling, or by letting in a portion of cold air to mix with the fumes.

As it is extremely desirable to avoid frequent stoppage of the works, in order to clean out the deposit from the apparatus used, it is preferred that there shall be a considerable depth of chamber or flue below the fabric, so that with lead furnaces, for instance, it is not necessary to clean out the large amount of deposited matter too frequently.

There are two dampers, one on the inlet or branch flue from the main flue to the apparatus, and one on the outlet or branch flue from the apparatus to the main flue; and when the apparatus is at work these are open, and a damper in the main flue itself is shut; but when it is desired to stop the apparatus for cleaning out deposit, the damper in the main flue is opened, and the others are shut.

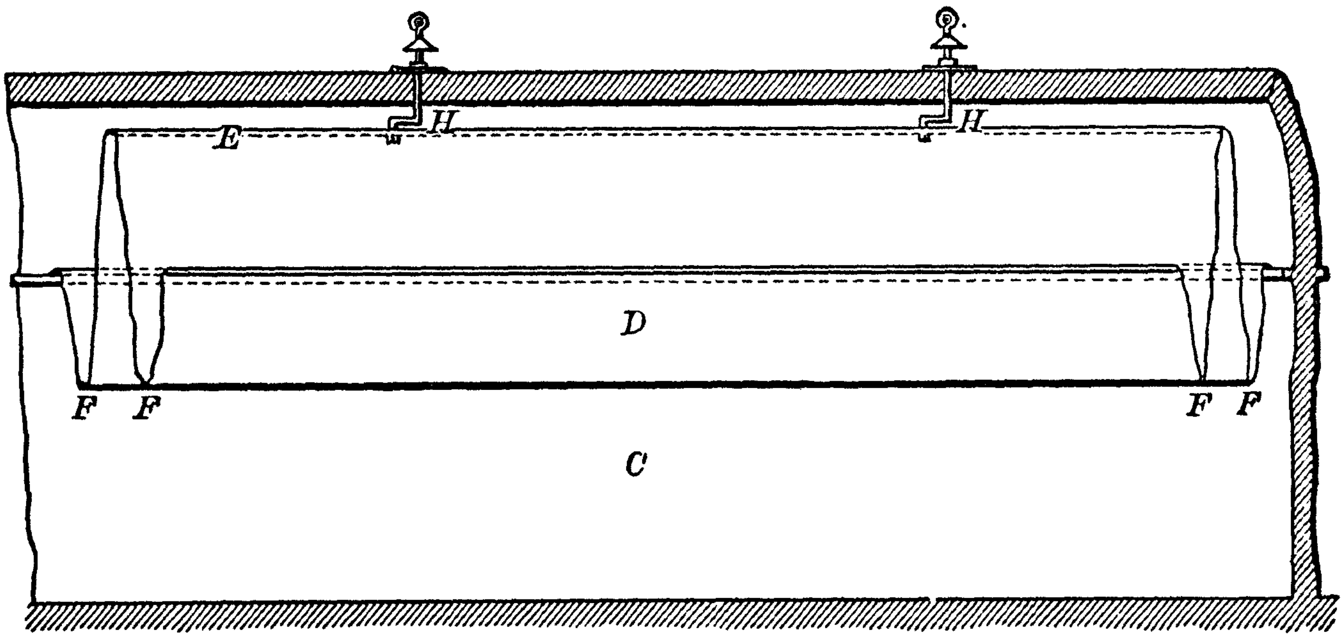

FIG. 102.

If in any case the deposited matter should cling to the fabric, handles and rods are connected to the frame from which the fabric hangs, so that it may be slightly shaken by moving the handles which are outside the chambers or flues.

The forms and arrangements of the apparatus may be varied to suit various localities or other conditions. As an example of how the invention may be practically applied, an arrangement is shown in the accompanying drawings of chambers and porous fabrics such as in many cases will be found suitable.

Fig. 100 is a sectional plan, and Fig. 101 a longitudinal section, of a set of chambers. Figs. 102, 103, 104, and 105 show parts of these drawn to an enlarged scale: Fig. 102 being a part longitudinal and Fig. 103 a part transverse section of one of the chambers; Fig. 104 a section looking towards the end where the fumes enter, and Fig. 105 a section looking towards the end where they leave, the chamber. A is a part of the flue or channel by which the fumes flow from the furnace on their way to the farther part A^1, Fig. 100. By shutting the damper B, and by opening the dampers B^1 and B^2 the fumes are diverted into a set of chambers C, through which they have to pass, their velocity being very much reduced in consequence of the large area of passage afforded to them. In these chambers C hang the sheets D of porous fabric, Fig. 102, which, in order that they may expose a large surface, may be with double folds, as shown; that is to say, their side edges may be attached to the side walls of the chambers, their middles attached to bars E, suspended from the crowns of the arches that cover the chambers, and their intermediate folds weighted down by bars F lying in them. The bars E, by which the middles are suspended, are attached to handles G, extending outside the chambers, so that they can be pulled up and down to shake the fabric, as indicated in Fig. 103; or they may be attached to cranked spindles H, as shown in Fig. 102, so that by turning these cranks the

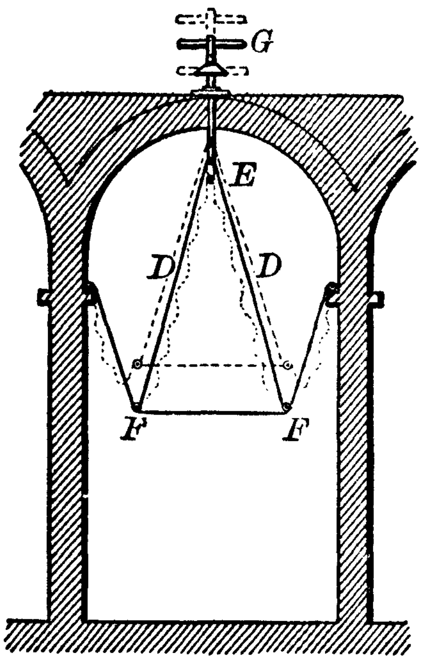

FIG. 103.

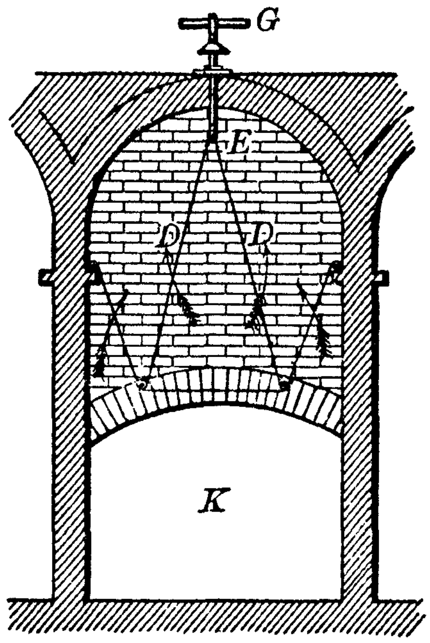

FIG. 104.

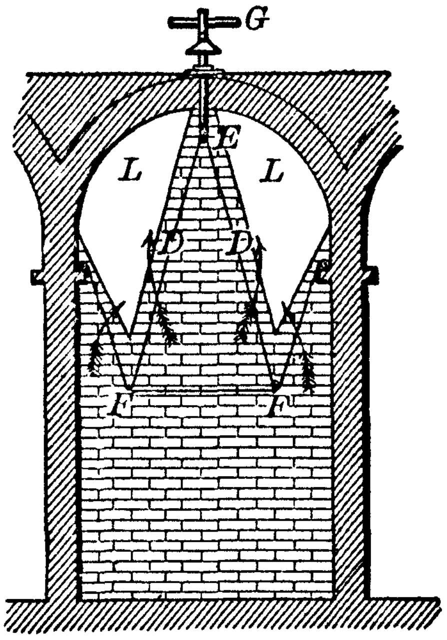

FIG. 105.

fabric can be shaken laterally. The fumes enter each chamber by the lower opening K at the one end, and after rising from the lower part of the chamber through the pores of the fabric to the upper part of the chamber, pass away by the upper openings L at the other end of the chamber, as indicated by the arrows Fig. 101. The solid matters suspended in the fumes are mostly arrested by the fabric and fall, or are shaken from it to the floor of the chamber, whence they are from time to time removed, doors M being provided to give access for this purpose, Fig. 101.

Instead of thus dealing direct with fumes taken immediately from the furnace, it is advantageous to clear them, in the first place, of a portion of their suspended matters by causing them to pass through depositing chambers, arranged as described in the preceding description of the Cowper and Sopwith dust chambers.

Warwick's Condenser.—This apparatus is adapted to fumes arising from reverberatory furnaces.

Fig. 106 is a section through V W of Fig. 108, and Fig. 107 is a section through X Y of Figs. 106 and 108. Fig. 108 is a section through T U of Figs. 106 and 107.

S is a supporting bar to keep the pipes in position only. These pipes are a series of corrugated iron syphon pipes, the corrugation being employed to increase the cooling surface, and are either plain or surrounded with water or moistened, or merely exposed to a current of air, like the condensing pipes used in gas works.

The pipes shown in the sketches are exposed only to the action of the surrounding air, and are marked P. These pipes are fixed vertically on the upper side of two contiguous parallel flues leading from the furnace to the chimney in such a way that each pipe forms a communication between the two flues, and it is preferable to make the pipes a good deal flattened in form, instead of round, so as more effectually cool the gases passing through them.

The contiguous parallel flues are marked A and B, and the section of the pipes is shown in Fig. 106.

The arrangement of the flues and pipes is such that if one of the flues, say flue A, was open to the furnace at the furnace end, and closed by a damper at the chimney end, and the

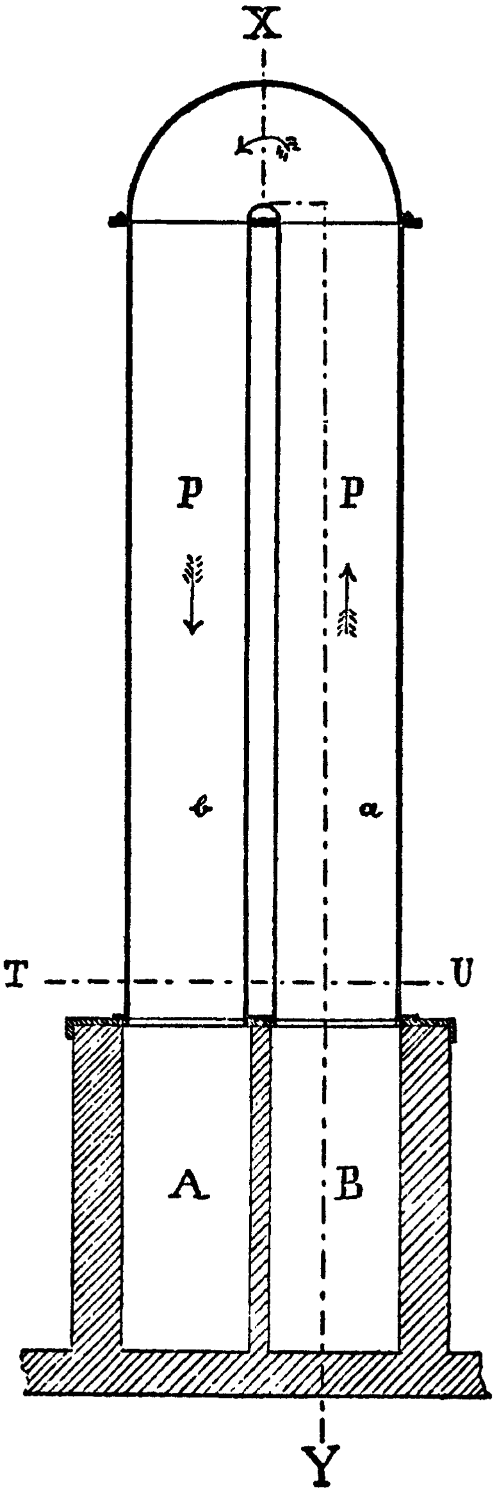

FIG. 106.—Section.

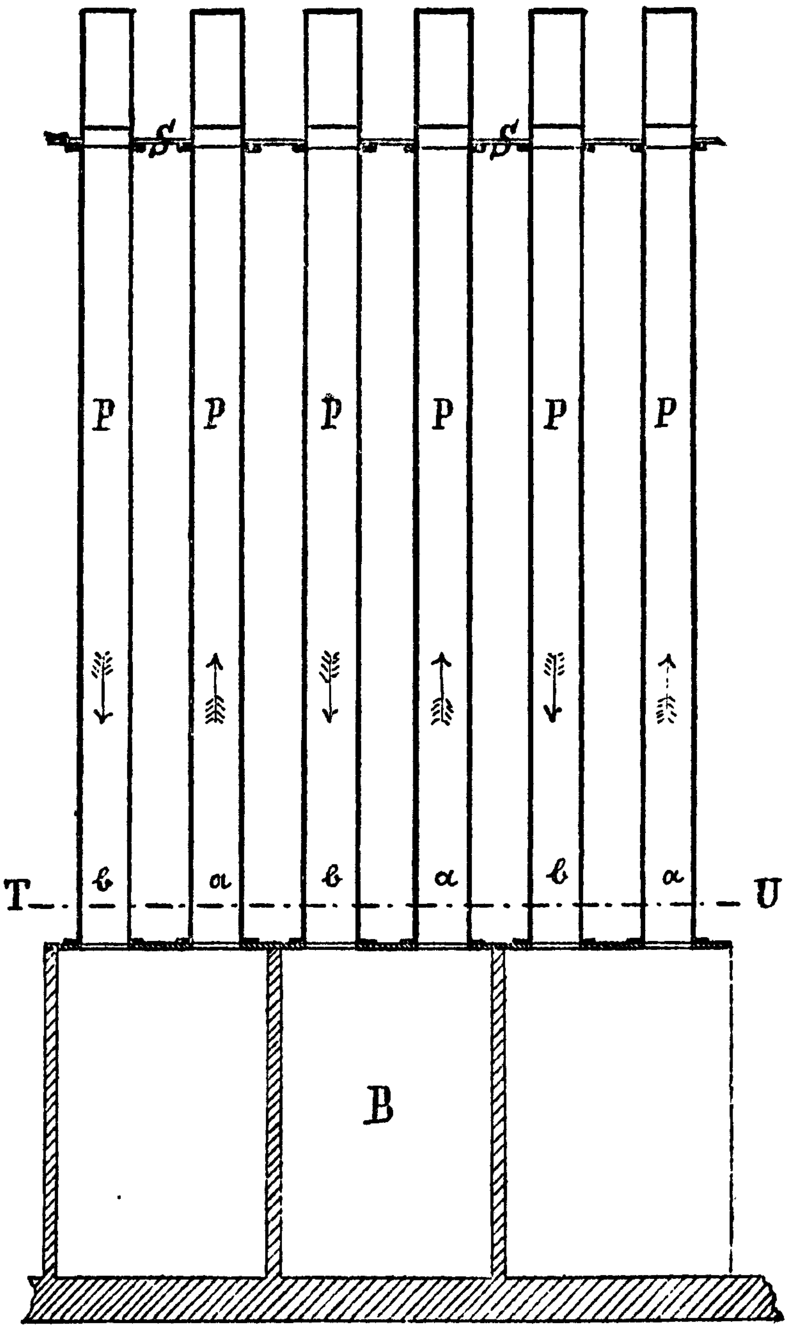

FIG. 107.—Section.

WARWICK'S CONDENSER.

other flue B was closed at the furnace end and open at the chimney end, the gases passing into flue A would pass by the syphon pipes from flue A to flue B and so to the chimney; and if a series of dampers or partitions are placed in the flues A and B alternately the gases would pass by the syphon pipes on the furnace side of the first partition in flue A into B, and from flue B by the second syphon pipe into flue A, and so on throughout the whole range.

In the flues A and B are shown a series of partitions, each marked C, so arranged that the course of the fume is through one pipe of the series at a time. If the series was more extended and every alternate partition C omitted, the course of the fume would be through two pipes at a time, and so on. The partitions may be alternated in the flues A and B, so as to throw two or three pipes into the course of the flue; but for convenience it is described as if for each pipe separately. To explain further the action of the apparatus, the two limbs of the syphon pipe are designated *a* and *b*—the limb, *a*, being that of each syphon pipe receiving the fume from the direction of the furnace; and the limb *b* that side of the syphon pipe delivering the fume in the direction of the chimney. The furnace fumes invariably ascend by the limb *a*, and descend by the limb *b*. As the fume becomes cooled its density is increased, as is well understood, and the result is that in every syphon arranged as described there is a tendency in the con-

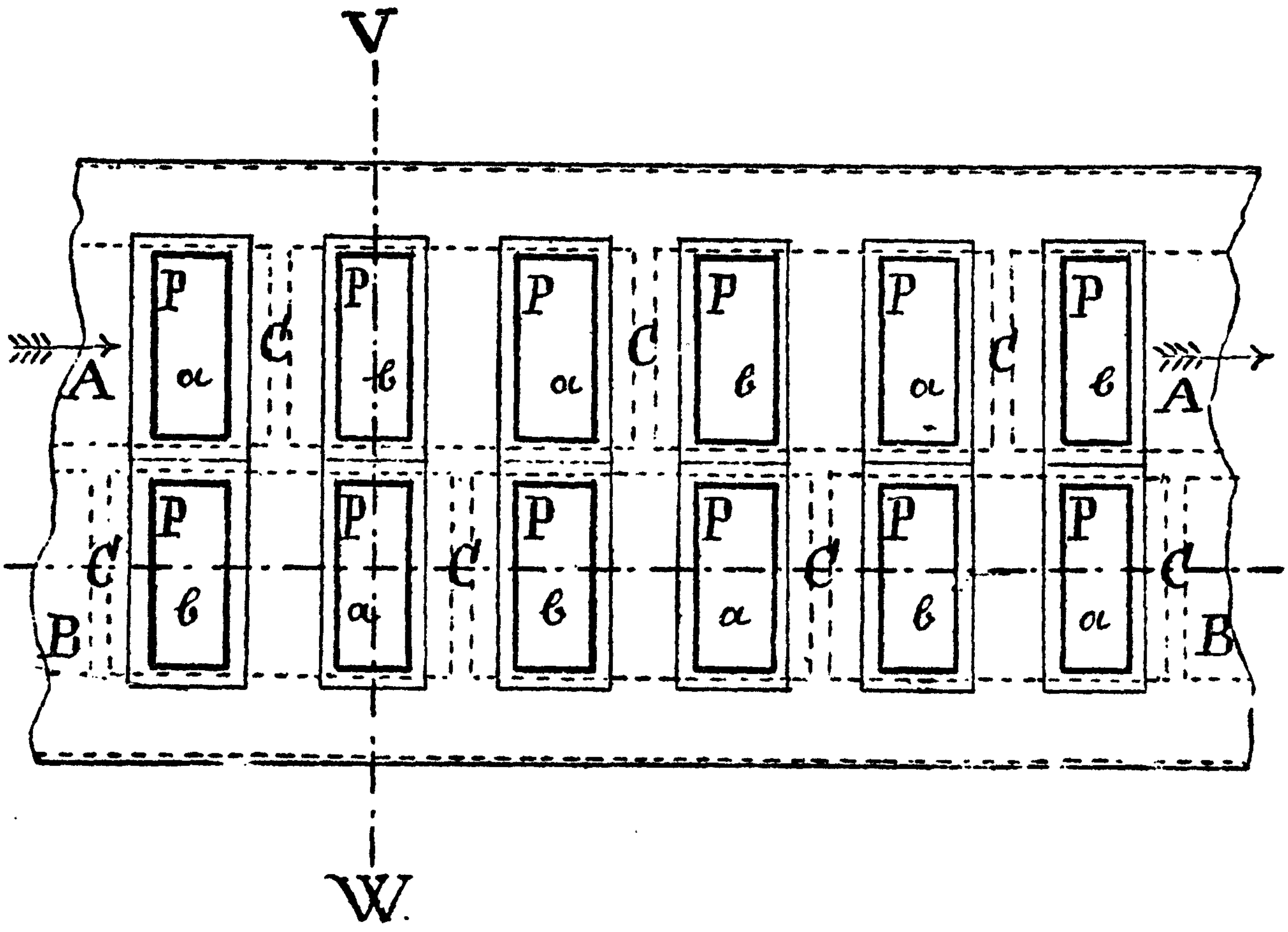

FIG. 108.—WARWICK'S CONDENSER.—Horizontal Section through T U.

tents to flow forward to the chimney independently of any chimney draught, and due to the greater density of the gas in the limb *b* as compared with the density in limb *a*. The course of the fume in the arrangement is indicated in the drawing by arrows.

The particles of metallic compounds depositing in the pipes fall into the flues A and B, and are cleaned out as occasion requires.

The invention may be combined with the use of any other appliances for further treatment of the fumes, and may be used either with suction apparatus, forced draught in the furnaces or chimney draught, or otherwise.

By means of the apparatus described, there can be used without inconvenience a larger than usual quantity of air in the oxidising stage of the lead-smelting process, and (as already stated) reverberatory furnaces may be used, instead of other forms of furnace, for operations for which that particular form is best adapted.

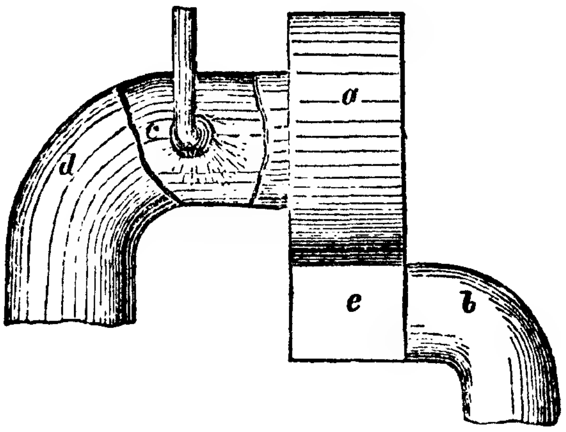

FIG. 109.—PONTGIBAUD CONDENSER.

Water Condensers.—The Pontgibaud Condenser.—In this form of condenser (shown in Fig. 109) the gases which emanate from the roasting, smelting, and refining furnaces are sucked up by means of the ventilator *a*, through the tube *b*, and from *e* they are driven into the tube *d*, where they are cooled by means of a jet of water coming from the sprinkler *c*, and then pass into the condensing chamber.

Stockoe's Condenser.—This is another form of condenser by means of water which is in use in Yorkshire, and is shown in Fig. 110. It consists of a large chamber, which is so divided by partitions that the gases are forced through water, and have to ascend and descend alternately before escaping through the chimney.

a, on top of the structure, is a water reservoir, feeding the cistern *b* located below, and is perforated at bottom by numerous little holes, so that a continuous shower of water passes into the condensing chamber underneath. This chamber is divided into six partitions, offering alternate passages for the fumes above and below. The floors *e* form a sort of false bottom covered with brush, dividing the condenser into three storeys; *f j* are doors for cleaning out the chambers; *x y* is the water-level of the condenser; *h* is the ventilator which drives the gases from the flue *i* into the condenser; *k* the flue leading to the chimney; *l* a pipe for the outlet of the water; *m* an opening for cleaning out the deposited dust, *n* outlet for the surplus water.

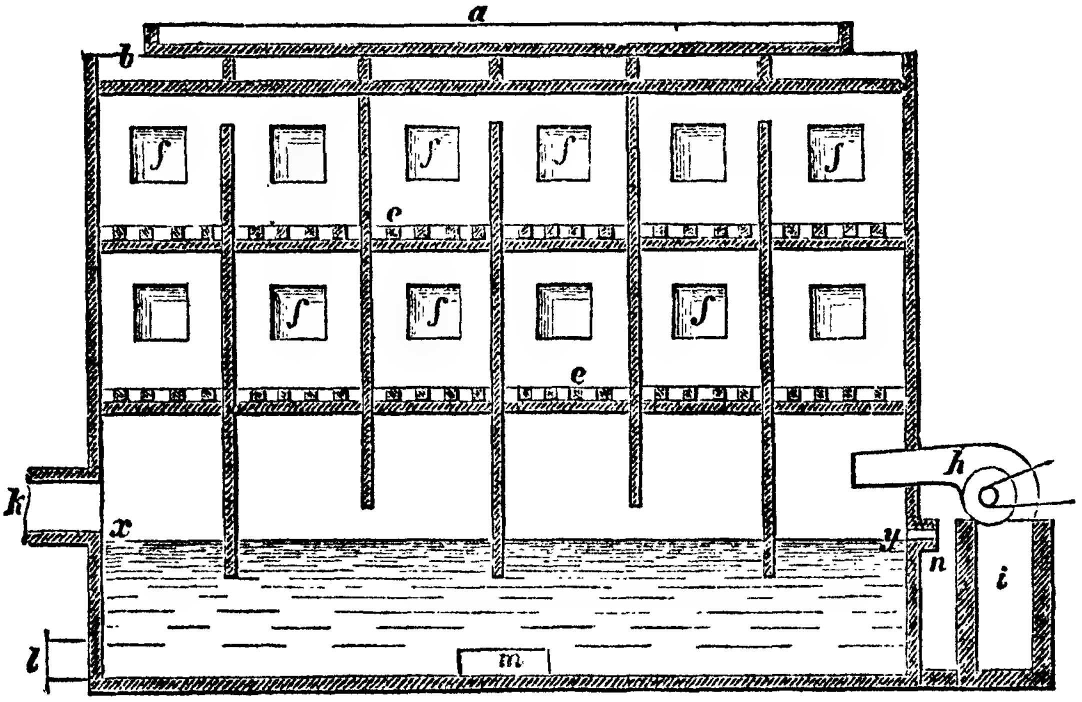

Fig. 110.—Stockoe's Condenser.

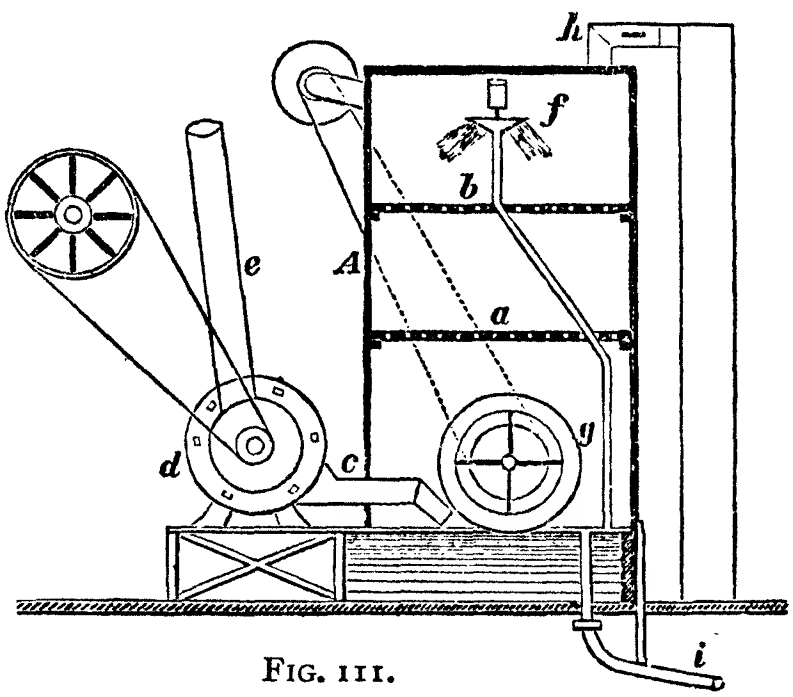

Fig. 111.

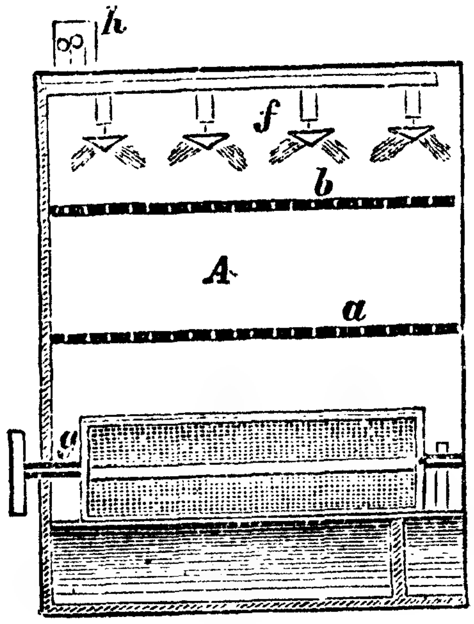

Fig. 112.

Griffith's Condenser.

Griffith's Condenser.—This is a modification of Stockoe's condenser, and is shown in Figs. 111 and 112. The wooden housing A is divided by means of perforated bottoms *a* and *b* into three divisions; the ventilator *d* draws the gases through *e*, and drives them through *c* into the condenser; here they meet a spray of water, caused by the agitation of the drum *g* and the spout *f*, before they escape through *h*; *i* is a water outlet.

Condensation Chamber at Waterman, in Utah.—A special form of condensation chamber which was in use at the Waterman works, near Stockton, Utah, is represented in Figs. 113 and 114.

In starting the furnace F the chamber is cold, and there is an insufficient draught through the chimney D, as well as danger of explosions from the flaming furnace. The top of the furnace, therefore, is at first kept partly open. In from eight to twelve hours the chamber is sufficiently warmed, and the flaming of the furnace has so far ceased that the top of the furnace can be closed and the gases directed through the chamber. Passing through A and B, there is no escape except through the revolving cylinder E, in which, as two-thirds of its size are immersed in water, the flames are thoroughly cooled, and the dust precipitated either in the water or on the walls of C. The walls of the two compartments of the chamber are cooled and kept wet by the jets *a*, *a*, which throw water against them in a continuous shower. The uncondensed gases then pass off into the chimney D.

The cylinder in this chamber revolves sixty-five times per minute when in action. The velocity imparted to it must, of course, be commensurate with the quantity of gases evolved from the furnace. The bottom of the chamber slopes from all sides to the discharge valve H, through which the accumulated dust is drawn off every twenty-four hours into settling tanks outside of the furnace building. From these the clear water is drawn off every twelve hours. The bottom of the condensing chamber is again filled, by means of a hose, after every cleaning.

To keep the water at the level C, an escape is provided to run off the water brought in continually by the jets *a a*. The roof of the chamber is constructed of slightly arched $\frac{3}{8}$ in. boiler-iron plates, which are laid on loosely.

The chamber did very good work, saving on the whole about 11 per cent. of the ore smelted as dust. But there

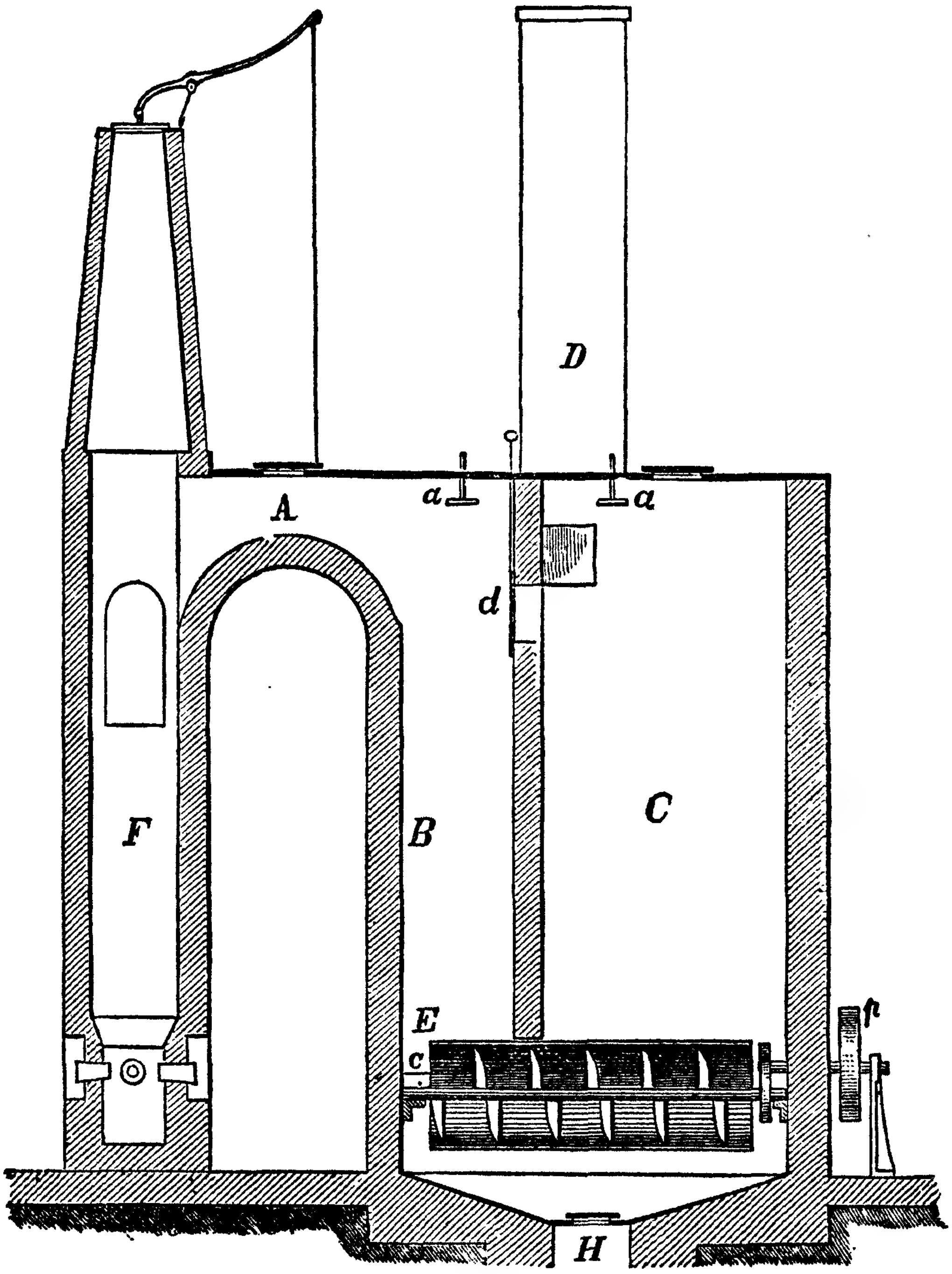

FIG. 113.

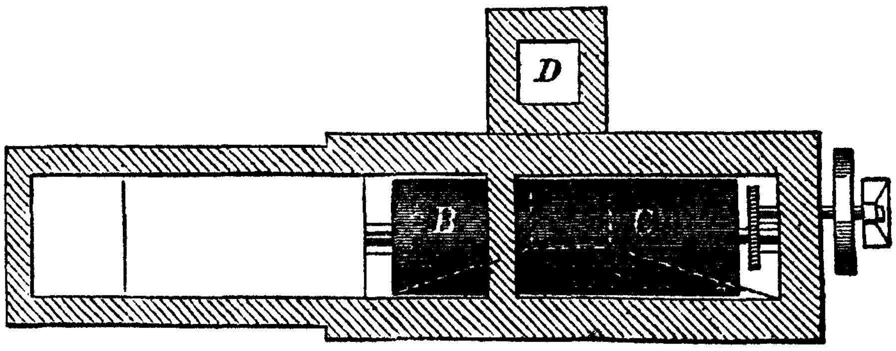

FIG. 114.

CONDENSER AT WATERMAN WORKS, UTAH.

are several improvements which suggest themselves for this chamber; as, for instance, some way of preventing the settling of dust in A, which can be effected by bringing the top of the arch under *a* to an angle of about 45°, or by inclining the whole canal steeply upward or downward. The size of the chamber is also smaller than it ought to be. There ought to be two chambers at least 16 ft. by 16 ft. and 25 ft. high, to be cooled by sprinklers from above, then the troublesome cylinder screw might be dispensed with altogether.

The Muntz and Sharp Condensing Apparatus.—Messrs. Muntz and Sharp force the fumes into the condenser by means of a jet of steam. On the top of the chimney stack by which the requisite draught is obtained in the furnace by which the metals are melted, they place a damper carried by a lever and capable of adjustment in the ordinary way. In order, however, to make the damper fit more accurately than ordinary dampers on the top of the chimney, a sand valve or trough of the same figure as the chimney stack is employed, which trough is partly filled with sand, and into this sand the edge of the damper fits when lowered. Near the top of the chimney stack is a lateral horizontal flue opening into the chimney stack. This flue is connected with a vertical flue which is conducted to the condensing chamber, and delivers the fumes to be condensed into the chamber in the manner hereinafter explained.

In the axis of the vertical flue is a steam jet, the steam from which has a downward direction. In order to give greater power to the steam jet the flue is gradually contracted a little below the nozzle of the steam jet, the flue again gradually expanding to about its normal diameter. Beneath the contracted part of the flue a pipe enters it and terminates in a perforated ring or rose. Cold water in a thin sheet, or in a finely divided state, passes by the pipe and ring or rose into the vertical flue and commences the condensation of the fumes drawn from the furnace.

By a proper adjustment of the damper and the steam jet, the inventors contend that the ordinary and proper draught of the furnace need not be materially interfered with.

The condensing vessel into which the fumes are conducted consists of a closed chamber of a size dependent on the size and number of the furnaces the fumes of which are to be treated, and the volatility of the metal or metals under treatment, and this vessel is partly filled with water. Into this vessel or chamber the fumes from the furnace or furnaces are delivered by the vertical flue containing the steam and water jets. The fumes on delivery into the chamber are made to pass under a perforated diaphragm below the surface of the water, through which they rise in a series of small currents or bubbles, the suspended and condensible matter being wholly or partly retained by the water, the uncondensed or gaseous matter passing away by a flue opening into the upper part of the condensing vessel.

The products when solid may be separated from the water by subsidence, and when soluble may be recovered by chemical processes suited to the nature of the dissolved matter.

Fig. 115 represents a vertical section of the apparatus. *a* is the passage or flue from the furnaces by which the fumes are conducted to the chimney stack *b*, by which the draught is obtained. This chimney stack is surrounded by a casing *c*, which constitutes a boiler or steam generator heated by the fumes passing up the said chimney stack. From the said boiler *c* steam is supplied to the steam jet hereinafter described. *d* is the damper of the chimney stack carried by the lever *e*, and worked by the rod and handle *f*. The accurate fitting of the damper *d* upon the top of the chimney stack *b* is effected (as already explained) by the sand valve at *g*, which consists of a trough filled with sand, into which the edge or rim d^2 of the damper fits when the said damper is lowered. The interior of the upper part of the chimney stack *b* is lined with a lining b^2 of fire-clay or brick for the purpose of preventing the excessive heating of the boiler above the water line. Opening into the chimney stack *b*, near the top, is a horizontal flue *h*, and the latter is connected with the vertical flue *i* in communication with the condensing chamber *k*, into which the fumes to be condensed and collected pass.

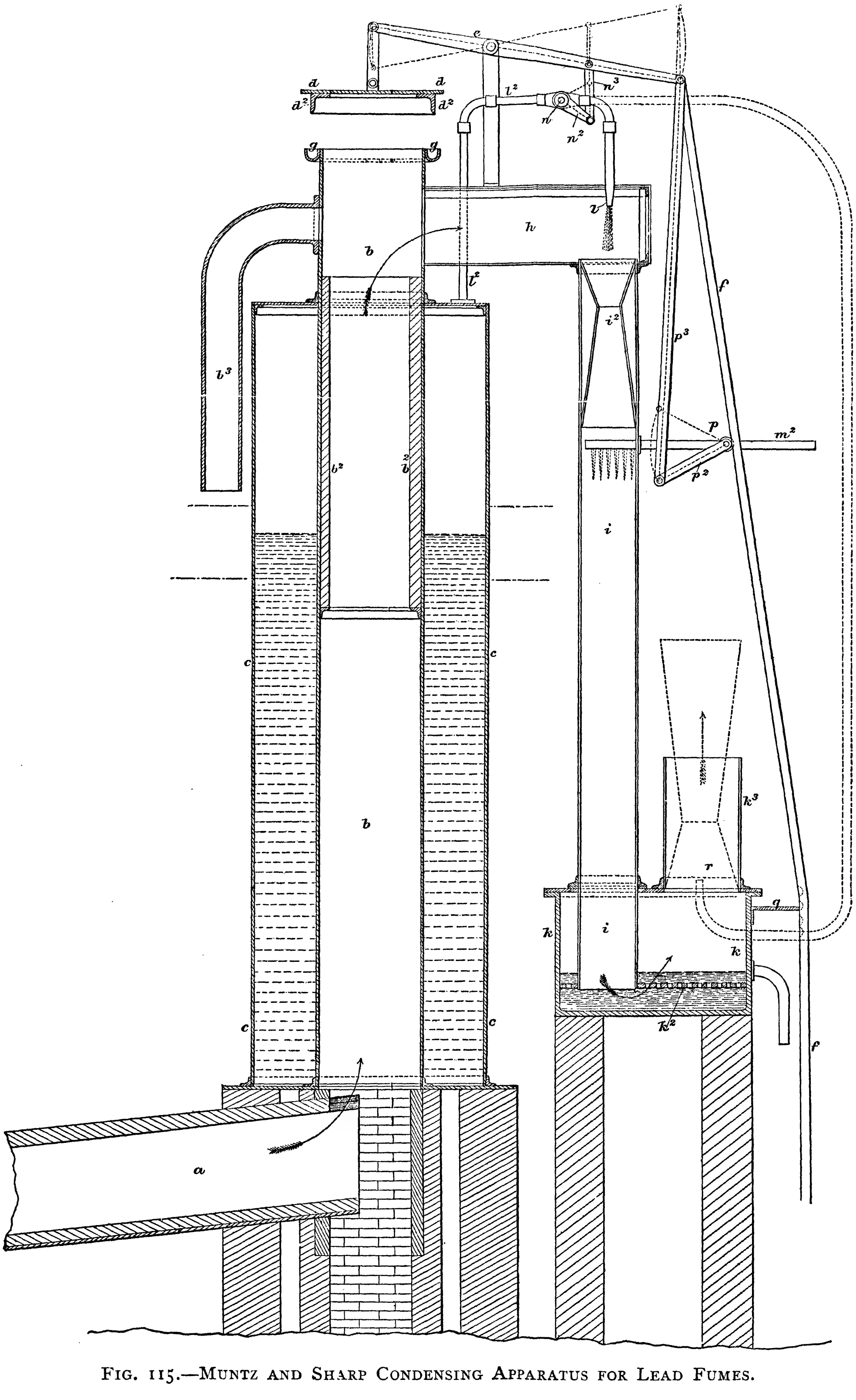

FIG. 115.—MUNTZ AND SHARP CONDENSING APPARATUS FOR LEAD FUMES.

[*To face p.* 214.

The particular form of the condensing chamber which is shown in Fig. 115, consists of a closed vessel having a perforated plate or diaphragm k^2 in it, under which the fumes are delivered from the flue i, the height of the water or other similar condensing liquid in the vessel being maintained a little above the said perforated plate or diaphragm. The passage of the upper part of the vertical flue i is gradually contracted in the manner represented by the pipe at i^2. Above the contracted part i^2 of the flue i is a steam jet l receiving steam from the steam generator c surrounding the stack b, or from other boiler or generator, and immediately below the part i^2 of the flue i is a perforated ring or rose m supplied with cold water by means of the pipe m^2, the said water passing into the said vertical flue i through the said ring or rose m in a thin sheet or finely divided state.

The pipe l^2 of the steam jet l and the pipe m^2 of the water jet m are opened and closed, and the passage of steam and water through them regulated or cut off by the action of the lever e of the damper d, so that when the damper d is opened and no condensation is required to be affected by the apparatus the steam and water pipes l^2, m^2, are closed, and when the damper is shut down the said pipes are opened and steam and water are supplied to the jets l and m. This automatic opening and closing of the pipes l^2, m^2, is effected as follows:—n is a steam cock in the pipe l^2, the arm n^2 of which is connected by the link n^3 to the lever e. In a similar way the cock p of the water pipe m^2 is connected through the arm p^2 and link p^3 of the lever e.

From the illustration here given it will be understood that when the damper d is lowered the cocks n, p, are opened, and when the damper is lifted from the stack (as represented) the cocks are closed and the passage of steam and water cut off from the pipes l^2, m^2.

The action of the apparatus is as follows:—When it is required to condense and collect the fumes the damper d is lowered, so as to make its rim d^2 fit in the sand valve g on the stack b, and thus prevent the escape of the fumes at the damper. The lowering of the damper opens the taps or cocks *n*, *p*, and steam issues from the steam-jet *l* in a downward direction, and water from the water-jet *m* descends in the vertical flue *i*. By means of the steam-jet *l* in combination with the contracted part i^2 of the flue *i*, a strong downward current is produced, by which the fumes are drawn through the stack *b* and flue *k*, and are forced down the flue *i* and through the water and perforated plate or diaphragm in the condensing vessel *k*. As the fumes traverse the vertical flue *i* they are partly condensed by the water jet at *m*, and finally condensed and collected in the condensing vessel *k*, the uncondensed or gaseous matter passing from the condensing vessel by the flue k^3, situated at the upper part of the said vessel.

In order more effectually to prevent any interference with the regular and proper draught of the furnace by the use of the apparatus, a pipe b^3 is connected with the upper part of the stack *b*, the lower end of the said pipe b^3 opening into the atmosphere. Where the current produced by the steam jet *l* is in excess of the current from the flue *a*, air enters at the pipe b^3, and when the current produced by the steam jet *l* is less than that in the flue *a*, a portion of the fumes pass out at the said pipe b^3.

The height of the damper and the position of the stop-cocks *n* and *p* are determined and fixed by the lower end of the rod *f* being secured by one of the series of holes represented being engaged with the peg or arm *q*.

Instead of applying the steam jet in the manner represented, it may be applied in the manner indicated in dotted lines at *r*. But the first-mentioned is preferable, and is recommended by the inventors.

The Panther Company's Condenser.—A form of condenser is shown in Figs. 116 and 117, which is in use at the works of the Panther Lead Mining Company. The fumes are led from the flue *a*, Figs. 116 and 117, to a series of condensing chambers *b*, each of which is preferably formed or built up of

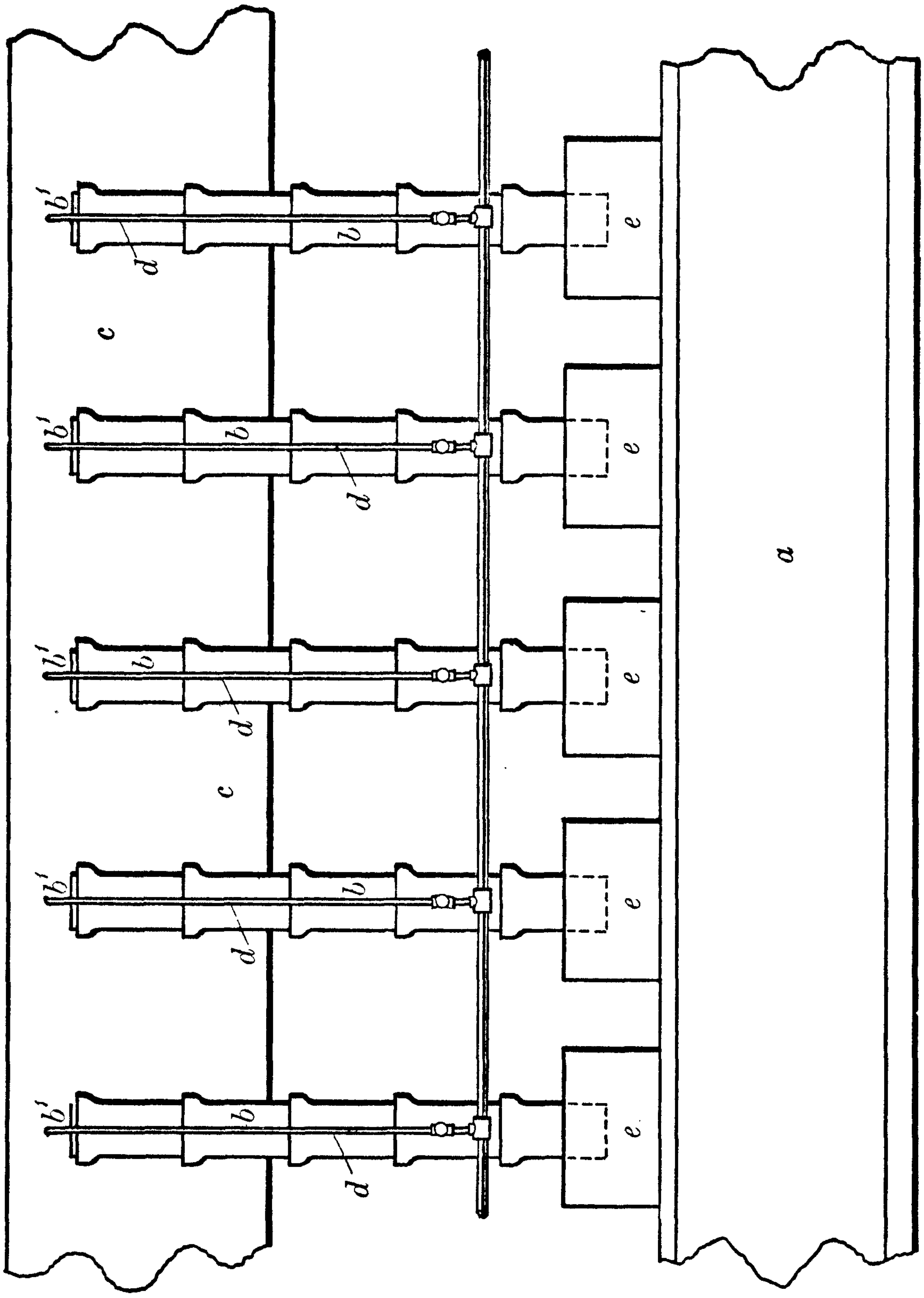

Fig. 117.

Panther Company's Condenser.

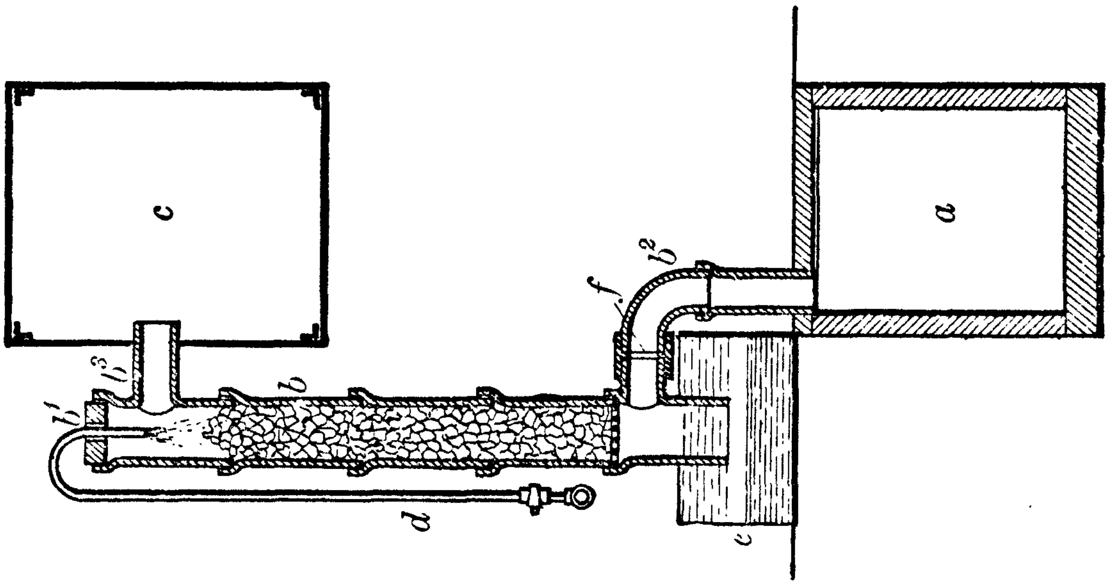

Fig. 116.

several lengths of earthenware pipe, and arranged in a vertical position; the upper extremity being closed by a lid *b*^{1}, whilst the lower extremity opens into a tank of water *e*. Near the lower end of the chamber *b*, a branch *b*^{2} is formed, which communicates with the flue *a*, and serves as an inlet for the fumes; and, near the upper end of the pipe, a branch outlet *b*^{3} is provided for conducting the fumes to a collecting and subsiding chamber *c*, which may also be utilised as a flue. The pipe *b* is charged with coke and other material, when saturated with water, for condensing and arresting the fumes during the upward passage through the vertical pipe or condensing chamber *b*.

The water is introduced by means of a pipe *d*, and discharged in a spray or stream in the upper part of the condensing chamber, and, after percolating through the coke or other material employed, escapes at the lower extremity of the pipe *b* to the tank *e*; the condensed fumes or a large portion thereof being carried down with the water and subsiding in the tank *e*, or other receptacle provided for the purpose. The uncondensed fumes which escape from the outlet *b*^{3} are led to a collecting and subsiding chamber or flue *c* of large capacity in relation to the furnace or furnaces with which the apparatus is employed, so that the velocity at which the partially-washed gases traverse such chamber is very moderate. The further subsidence of the solid matters is hereby facilitated; the desired result being the more readily accomplished in consequence of the fumes being charged with moisture. The gases, after traversing the chamber *c*, may be led to the chimney shaft.

The inlet from the flue *a* to each condenser may be provided with a damper or other means for regulating or intercepting the communication. Several vertical pipes, such as are described above, may be grouped together and have a common inlet from the flue *a* and a common outlet to the subsiding chamber *c*.

When using a reverberatory furnace, it is better to employ an exhaust fan or apparatus of an equivalent description between the furnace and the condensing apparatus, or between the latter and the subsiding chamber. By these means the draught to the furnace can be controlled and regulated independently of that created by the chimney shaft. Dampers may, however, be arranged so as to enable a portion or the whole of the fumes to be conducted direct to the chimney instead of to the condensing apparatus. In some cases, it may be more convenient to apply an exhaust fan to the subsiding chamber to educe the purified gases therefrom; the fumes being, under such circumstances, drawn from the furnace through the flue *a*, condensers *b*, and chamber or flue *c*.

Condensation of Fumes by Electricity.—Mr. Walker proposes to lead the fumes from the furnace through dust chambers or flues of the usual construction, but he collects the fine particles of metals suspended in the fumes by means of a discharge of high potential electricity from metal points or edges or other projections situate in the flue passage chamber or other receptacle, and so placed that the current of air or gas containing the finely divided material or metallic vapour is carried or passes in close proximity to the discharging points. The discharge from the points electrifies the air or gas, and the charged air or gas then acts on the finely divided matter in it, causing it to cohere, condense, and deposit.

The separation and collection of metalliferous particles from the fume from lead-smelting furnaces is effected as follows:—

The flues from such furnaces are at present frequently conducted for long distances in a horizontal or inclined direction, in order that the fume may deposit a portion of the metalliferous matter which it contains. The flues may be much shorter than at present, and nevertheless a better deposit will be obtained, and the process may be applied in other receptacles or reservoirs.

At each point where the treatment is to be applied, within the flue or chamber a metal conductor is provided, which may be a rod, or combination of rods, spheres, plates, or any other convenient form, of such dimensions as will be most suitable to the size of the passage or receptacle. In preference two rods in the form of a cross, each arm of which occupies respectively about two-thirds of the height and breadth of the passage, can be used.

The surface of this conductor is studded all over with metal points or other projections—say at distances of two or three inches apart—and projecting (it may be) two or three inches from the surface of the metal conductor. This conductor is very carefully insulated in any suitable manner. Thus it may be done by supporting it at the end of a horizontal metallic rod passing through the wall of the flue. An earthenware tube may be inserted into the wall of the flue, and the supporting rod may be passed through the tube, but without being in contact with it. Outside the flue the rod may be carried on glass legs entering without contact at the neck into glass vessels in which a small quantity of strong sulphuric acid is contained. This rod is connected with one terminal of any kind of electrical machine capable of developing high tension electricity by induction or by friction, the other terminal being connected to the outside of the flue or chamber or to earth. Or the electricity may be supplied at high potential by any other known means. The whole is so arranged that a continuous electric discharge is maintained from the points which stud the surface of the conductor within the flue or chamber into the air.

Other means may be resorted to to insulate the sphere or conductor in like manner. Several of these arrangements may be applied along the flue at distances of a few yards.

The metalliferous particles will by this treatment be caused to agglomerate, and will be deposited in the portion of the flue beyond and near the place or places where they are submitted to the electric discharge as herein described.

The deposit may be removed mechanically from the flue from time to time, or it may be removed in part by a stream of water flowing along the lower part of the flue, or in any other convenient way.

CHAPTER X.

SEPARATION OF SILVER BY CUPELLATION.

THE DESILVERISING OF LEAD BULLION OR WORK LEAD—The Process of Cupellation—The German Cupelling Furnace—Cupellation in the German Furnace—Cupellation Furnace at Freiburg—Cupelling Furnace at the Przibram Silver Works—The English Method of Cupellation—Manipulation of the Cupel.

The Desilverising of Lead Bullion or Work Lead.—Some fifty years ago the only known method by which silver was separated from lead was by cupellation. It is an ancient method and a very good one, but it possesses some drawbacks; and especially must the lead bullion carry a certain amount of silver to permit of a profitable separation by this process.

As will be shown in this chapter, the whole of the lead is converted during cupellation into litharge or oxide of lead, of which only a small proportion—the red litharge—is a merchantable article, whereas the balance must be reduced again by another fusion into bar lead. All this means a large consumption of fuel and labour, and losses of lead by volatilisation, with a certain loss of silver in the litharge and ultimately resulting bar lead.

That such conditions should have attracted the attention of inventors is not to be wondered at. Mr. Pattinson, about the year 1833, published the results of his observations as to the action of lead bullion under certain physical conditions. He found that, when a bath of argentiferous lead cooled, a separation of matters took place; a portion of impoverished lead crystallised out and floated on the bath, which allowed of their separation by means of skimming ladles, and this fact was made use of as an industrial method by which rich lead was obtained on one side and impoverished metallic lead on the other. The process is fully described further on.

That this new method was a great improvement on the old method is obvious. It allows the desilverising of very poor lead bullion, and the greater part of the metal is so impoverished in silver as to become at once an article of commerce, while the silver is concentrated in a comparatively small quantity of lead, from which it is separated by cupellation.

But this method has also been replaced by more practical inventions. It was found that in "Pattinsonising" a large number of iron kettles had to be used, and these were liable to breakages. To carry out the operation required also a lot of hard and tedious manual labour, enervating to the workmen.

Luce and Rozan have perfected the Pattinson process by using steam. The number of kettles they reduce to two—one for the fusion and one for crystallisation; and the manipulation of the lead is effected by mechanical means. The use of steam at the beginning of the operation has also a tendency to refine the lead of impurities like antimony, and a lead containing ½ per cent. of antimony need not be refined for the Luce and Rozan process.

Cordurié has also taken out a patent for refining lead by use of steam.

The desilverising of lead bullion by means of zinc was first proposed by Karsten, in 1842, but came to public notice first in 1859, when Parkes introduced it into England in a practical manner. Although the principle of this method is very simple, the subsequent separation of the zinc from the lead has given rise to numerous patents, Faber du Faur, Flach, and Brodie having each of them devised apparatus for the purpose. There are also several methods of desilverising by means of zinc, such as Giraud's and Koch's, described in the next chapter.

The best method is the one devised by Cordurié. He produces rich lead, which is cupelled, and rich zinc oxides, which contain, mechanically mixed, grains of lead and oxide of lead. These oxides are either treated with sulphuric acid, so as to convert the zinc into a sulphate, or they are distilled to get metallic zinc, or they are introduced into a cupelling furnace, where the silver is taken up in a lead bath and the zinc is lost.

Schnabel has proposed to treat the oxides with ammonium carbonate, which separates the lead and lead oxides, as the zinc oxides go into solution. The whole is passed through a filter press, whereby the zinc solution is clarified and the lead oxide remains in the filter. The clear solution is distilled and the ammonium salt condensed, and the residue of zinc carbonate washed and dried, when it is ready for the market as white paint.

The Process of Cupellation.—The process of cupellation, the object whereof is the extraction or separation of the silver from the lead, is based on the property which fused lead possesses of being easily converted into an oxide when subjected to a current of air. The oxide of lead, being specifically lighter than metallic lead, swims on its surface and draws toward the periphery of the lead bath, which is slightly convex in form, whence it can be readily removed.

This oxide of lead, or litharge, when fused, is capable of dissolving the refractory oxides of several other metals, thus rendering them fluid and easily conveyed away. When, however, silver is present, this metal does not partake of the oxidation, and consequently it remains behind after the process purified of nearly all the base metals with which it was mixed. Upon this principle is based the cupellation process, and there are two distinct methods in use—namely, the German and the English systems. In the former the hearth of the cupellation furnace is formed of marl or other similar material; it is fixed and of large dimensions, and the lead is often added all at once: in the latter the hearth of the furnace is movable, and is carried upon an iron car; it is made of bone ash, and its dimensions are relatively small; the formation of the litharge is very rapid, and the lead, instead of being given all at once, is added progressively, as the contents on the hearth are oxidised.

Now cupellation has either for its object the absorption of the fused litharge, with the base metal oxides it contains, into some porous substance, like bone ash; or, as it is carried out on a large scale, the driving away of the fused litharge from the top of the lead bath by means of an artificial air-current or blast.

When lead is cupelled on a small scale, as in assaying, all the oxide of lead is removed by absorption, leaving the pure silver globule behind. On the large scale this becomes impossible, on account of the enormous quantity of bone ash this would require, and the bottom of the cupel hearth would have to be very thick, so as to absorb all the litharge produced. There is a limit, however, to the thickness of the cupel bottom, as it has to be kept hot enough for the cupel to absorb the litharge, and if this is not the case solidification of the oxides in the body of the cupel will take place and prevent further infiltration. Absorption of oxide of lead takes place on the surface of the cupel; and on a large cupelling hearth, where several tons of lead are treated, this surface is very small in comparison to the volume and weight of litharge produced. Bone ash is by far the best material for test bottoms, because it resists the corrosive action of oxide of lead.

The German Cupelling Furnace.—This form of furnace, which is largely employed, is shown in the axinometric drawing of Fig. 118. (The corner to the right is supposed to be cut away, that the interior of the apparatus may be better seen.) The furnace, which is of the reverberatory class, consists of a circular portion containing the hearth, and a rectangular portion containing the fireplace. The foundations, F F, are firmly built of stone, pierced with canals to carry off the moisture, and are well clamped with flat wrought-iron rods, passing across the body of the structure in various directions and connected with the numerous vertical rods that are shown around the exterior.

The fireplace A is arranged with a grate for burning either wood or coal, according to the locality of the establishment.

The former fuel is the best for cupelling, since it gives a clearer and more oxidising flame, which can be regulated with more facility than that produced by coal. The hearth H, upon which

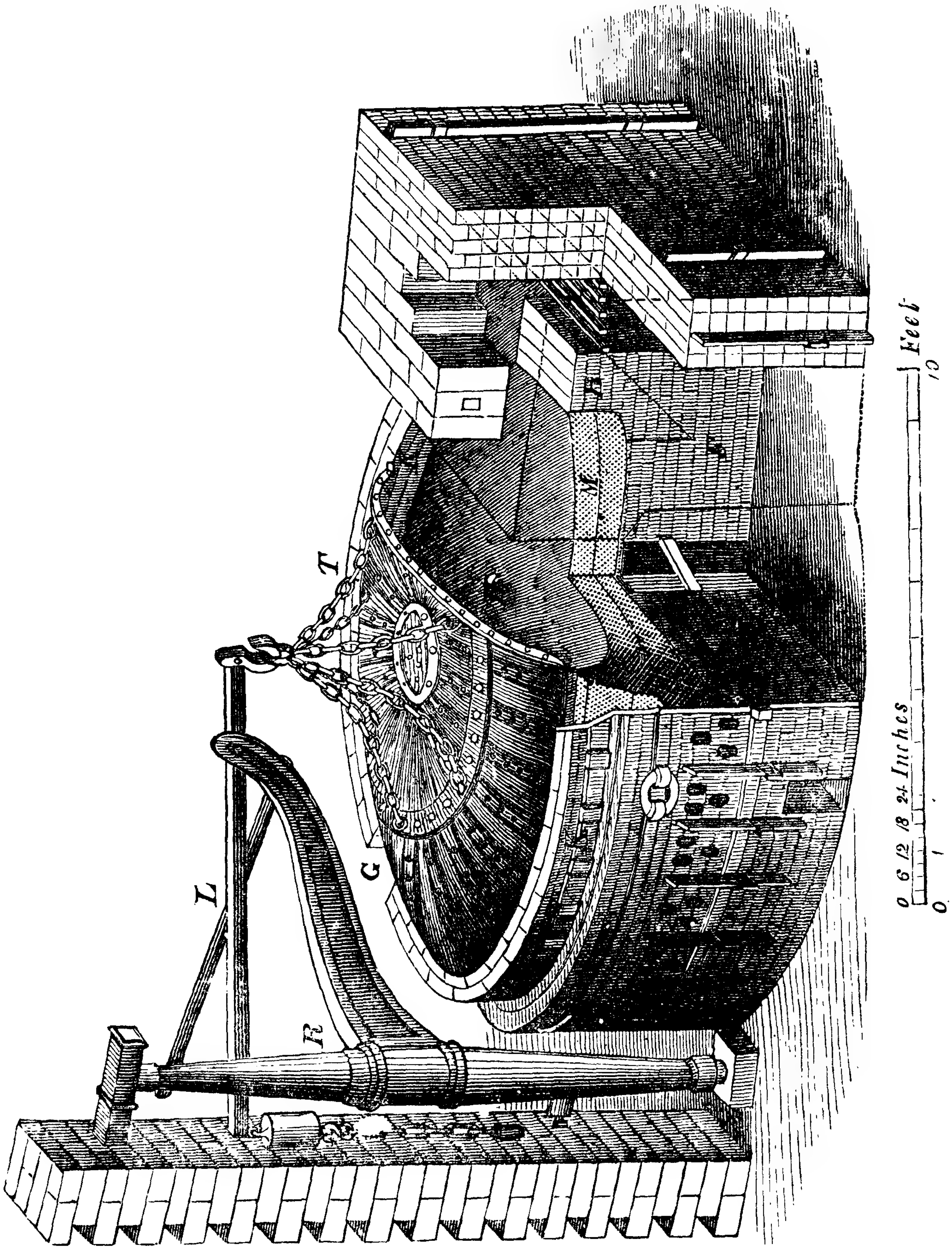

FIG. 118.—GERMAN CUPELLING FURNACE.

the metal is fused and oxidised, is circular, like the body of the furnace, and is hollowed regularly, like a large saucer, from the edges towards the middle. It is composed of marl, or an intimate mixture of lime and clay, and is beaten by proper tools into the desired shape while still in a moist condition. The hearth H is surrounded by a wall K K, which serves to support the movable cap C, formed of plate-iron well riveted together, strengthened by bars upon its upper side, and lined with clay that is secured in its place by numerous little iron straps. This clay serves to protect the iron from the influence of the flames, and requires to be frequently renewed. The entire cap is hung upon chains and attached to the crane R by means of the lever L. By this contrivance the cap C can be raised from its bearings and swung aside when it is desired that the furnace shall cool rapidly, or when the hearth H is to be repaired or renewed. The aperture G in the wall K, opposite the fire bridge B, serves to introduce the mass from which the hearth is made and the lead to be treated, and also as a sort of chimney, through which the products of combustion pass from the hearth.

A second aperture in the corner—which is represented in the figure as being cut away—serves to draw off the oxidised products, and for the workmen to watch the course of the operation. Opposite this aperture, at T, are two iron tuyeres that are so inclined that a strong blast may be thrown through them towards the middle of the hearth, but are so arranged that the workman may give the wind any direction that may appear desirable: they are made of different dimensions to suit the local wants of each establishment (see Fig. 118). The pressure of the wind thrown through the tuyeres should be strong enough to form little waves on the surface of the fused litharge, and drive them towards the opposite working door.

Cupellation in the German Furnace.—Each operation in the German cupelling furnace must commence with the formation of a hearth. This is composed, as before stated, of marl, or, when marl cannot be obtained, of a compound of lime and clay, prepared by powdering the two constituents and mixing them intimately. The proportion of clay in this case should be only large enough to make the mass tenacious.

Marls when homogeneous are preferable to an artificial compound of lime and clay, since it is difficult to obtain by mechanical means a mixture of these substances so perfect as that formed by nature. The marl is prepared by stamping it finely in a mill belonging to the furnace, and, after passing it through a sieve, mixing it with the remains of old hearths, also stamped and sifted. The workman considers the material best adapted for his use when he has moistened it sufficiently to make it mould well when squeezed in the hand, but at the same time not wetting the skin. This mass is now brought to the furnace, and either stamped layer after layer in the hollow prepared for it, or it is all put down at once, and in one layer, and by beating it with a proper instrument of wood it is brought to the form shown at H. The operation is terminated by giving the surface an extra firmness and smoothness by means of stampers of cast-iron.

The hearth being ready, the rich lead is charged by laying down a thin bed of straw, and piling the pigs carefully upon it in such order that they take up the least space. The cap C is then placed, by means of the crane, in its proper place, luted around the edges with clay, and the fire started in the grate A.

In most cases the rich lead contains, besides silver and lead, several per cent. of other metals, the greater portion of which is oxidised in the early part of the process. Soon after the metal is fused its surface is found covered with a dark crust, which consists of the oxides of these metals, and also of earthy substances, being impurities in or on the pigs of lead. This crust is drawn off through the working door opposite T by means of a piece of wood attached to the end of a long bar of iron.

The first product of cupellation are only sinters, and they contain the greatest portion of those oxides which are not readily fused with some metallic sulphides and arsenides. It is called *abstrich* or *abzug*, and as it contains silver is melted over again. It is of a black colour. The surface of the lead becomes covered again with a crust, mostly an antimoniate of lead oxide containing other oxides, which also are dark coloured.

This second product is termed *black litharge*, and gradually loses its opacity in proportion as the foreign metals become diminished in the bath. As soon as black litharge commences to form, the fire is increased and the litharge drawn over the breast.

After all the foreign metals are oxidised, and are taken up by the lead oxide, it changes into *yellow* or *green litharge*, which is the third product, and contains less silver than the first two. As soon as yellow litharge begins to form, the fire is diminished, as the yellow litharge is easily fused, but the temperature is kept stationary until the end of the operation, when the litharge takes a *red* colour, between a cherry and a bright red, at which degree the litharge has a high degree of fluidity.

The current of air (which is driven in by a nozzle with the pressure of about 1 in. of mercury) is so regulated as to produce the proper-sized waves of litharge, striking the fluid metal upon a large part of its surface without disturbing the draught of the furnace. It requires long practice to enable the workman to arrange the heat and blast to the best advantage, and to draw out the litharge in a proper manner. This is done by making a channel in the breast by means of a hook, by which the litharge flows out of the hearth, and the channel has to be deepened as the lead sinks in the hearth. The heat should never be so high as to cause an evaporation of the lead, but must not be too low, so as to cause a clogging of the litharge and an enrichment in silver. If the bath works properly there will be a ring of litharge 8 in. to 12 in. wide on the periphery of the molten mass, and the centre clear lead.

The yellow litharge contains little silver, and is therefore called *poor litharge*. When it is allowed to collect by running it into cast-iron pots, and then to cool gradually, the outer crust only will retain this yellowish appearance, and the inner portion of the cake will be *red litharge*. This will not collect in a solid state, but forms an incoherent mass, which easily falls to pieces in a flaky or scaly condition. These two varieties arise simply from their mechanical condition, which is the result of different circumstances of cooling and solidification.

Their chemical composition is the same, but in trade the red variety is far more sought, and hence the furnace-men endeavour to produce more of this sort by running the products of the furnace carefully into the pots previously heated; and experience has taught that cold weather and cupelling at a lower temperature are favourable to the formation of red litharge.

When the pots have sufficiently cooled to form a crust, the crust is pierced, as otherwise an evolution of gases may take place, which will result in explosions projecting the hot mass about to the injury and danger of the workmen; and in this way the molten interior is allowed to flow out.

Towards the end of the cupellation only a little lead will be left in the hearth, and the silver contents in the litharge will be increased. This *rich litharge* is the fourth product of cupellation, and is collected separately and added to the smelting charges in the ordinary furnace operations. The silver in the litharge is in the state of an oxide, or else in mechanically enclosed particles.

When the cupellation is complete, the moment at which the last particle of lead leaves the silver is marked by a beautiful phenomenon which is known as the "brightening." The silver exhibits on the surface a brilliant play of rainbow colours, and the whole mass seems to be in a state of rapid rotation around a common centre. After awhile the play of colours disappears, the mass becomes motionless, and another phenomenon will be witnessed, called *rochage*, or "sprouting" or "vegetation"; this takes place especially when the pure silver is rapidly cooled. As the exterior of the mass cools and hardens, the interior expands, and, fracturing the thin crust, sends out sprouts of what might be taken to be a species of metallic vegetation; but fused silver has the property of absorbing oxygen, and it is by the sudden liberation of this gas that the crust is broken and the metal projected through the apertures.

Loss of silver is experienced by particles of silver being thrown into the air, but this may be prevented by allowing the mass to cool very slowly, so that the interior may become solid almost at the same time with the exterior; and thus, by permitting the confined oxygen to go off through fluid metal, an explosion will not ensue.

After cooling the silver cake, it is drawn from the furnace by iron bars, cleaned of the marl and litharge, and is then remelted in crucibles to be cast into ingots.

The time necessary for accomplishing the process of cupellation will vary with the treatment and the amount of lead taken at once. Where the charge amounts to 10 tons upon a hearth 10 ft. in diameter, sixty-six to seventy hours will be required. In some furnaces the lead is not all put in the hearth at once, but after the first charge has partially oxidised, more fresh lead is added, and oxidation and addition are repeated several times. This system produces an impure litharge, but a larger quantity of lead can be treated at once. Upon the process being finished, and the silver removed, the movable cap is taken off, the furnace allowed to cool, and a greater part of the hearth broken out and fused in a cupola or reverberatory furnace with the proper admixture of fluxes, in order to recover the silver and lead that have penetrated it.

The early products of oxidation, containing many impurities, such as iron, zinc, antimony, sulphur, arsenic, &c., with much lead and some silver, are given back to the fusion for rich lead, or reduced separately, forming an impure alloy, usually containing much arsenic antimony, which serves for making shot or preparing the alloy for making printers' type. At the last part of the operation, just before the brightening, the litharge is very rich in silver, and is hence carefully laid aside, reduced separately, and cupelled for the precious metal.

Cupellation Furnace at Freiberg.—At the Freiberg smelting works, silver-lead, when submitted to the cupellation process, is not completely refined, but the operation is interrupted when the work-lead is an alloy of about 80 per cent.

of silver and 20 per cent. of lead. This is done on account of the bismuth, which concentrates with the silver, and by further treatment the bismuth is afterwards recovered.

The construction of these furnaces is described by C. A. Plattner, in an official report, as follows:—"The present furnaces are not round, but square, as it was found that there was a limit to the dimensions to which round furnaces could be built, and the large round cupelling furnaces yielded, with rich silver lead, a rich litharge, and the quantity of red marketable litharge was thereby diminished. The reason for this was that the temperature could not be maintained over the bath sufficiently high to prevent a mechanical admixture of small particles of work-lead with the litharge.

"An insufficient temperature prevents the formation of red litharge. As the litharge forms slowly, the continuous flow of the same is interrupted, and a cooling of the litharge in the accumulator takes place in layers, not allowing the gradual cooling, which is so necessary a condition for making red litharge.

"The new furnace is surrounded by a rectangular wall, with fireplaces on the side, covered with a sheet-iron cover, lined with fire clay."

The furnace constructed by Mr. Plattner, in 1884, is shown in the accompanying Plate (Figs. 119—124). The hearth has an elliptic form, and the outer brick work is surrounded by iron wall-plates, which permit of an easy anchoring. One of the short sides is provided with the fireplace, and the tuyeres are at the adjoining angles, whereas on the opposite short side is the litharge channel. On the two long sides are the openings or charging holes, through which the lead is introduced and from which the gaseous products of combustion escape. By more or less closing them with sheet-iron doors, the draught through the furnace may be regulated. The bottom of the charging holes are covered with iron plates. The hearth is covered with a sheet-iron dome lined with fire clay. The dimensions of the furnace are as follows:—

	C.metres.
Length of cupel bottom from the litharge channel to fire bridge	400
Width of cupel bottom between charging holes	205
Deepest point of cupel bottom below edge of breast plate on litharge channel	—
Length of fire bridge	200
Width " "	75
Height of fire bridge above grate	20
" " " lowest point of cupel bottom	40
Length of grate	200
Width "	60
Distance between the two tuyeres at their embouchure into the hearth	250
Average height of dome over cupel bottom	80
Width of litharge channel	90
Height of same above floor level	85
Depth of marl hearth on the thickest point	15

The oval shape of the cupel bottom permits the flame to play evenly over the whole lead bath and to escape through the litharge channel, whereby the litharge is maintained in a thinly fluid condition, and an admixture of the fine particles of work-lead is prevented. The process is carried on uninterruptedly, no chilling taking place.

Cupelling Furnace at the Przibram Silver Works.—See Figs. 125 to 128. The outer walls are made of hewn blocks of stone, and in the lower masonry are channels for the escape of moisture, as shown in Fig. 126. On top of the large channels, and below the two rows of small channels, is an iron plate, which is perforated with numerous holes through which the moisture escapes, which eventually can escape through the main drain, as shown in Fig. 125. Above the top row of channels is a layer of bricks, *b*, and on top of this is the layer of marl, *c*, and this is covered by the renewable layer of marl, *d*.

At *e* is a shallow depression for the collection of the silver; *f* is the fireplace; *g* the firebridge; *h* the nozzles; *i* the induction channel; *k* an opening leading to a short stove-pipe

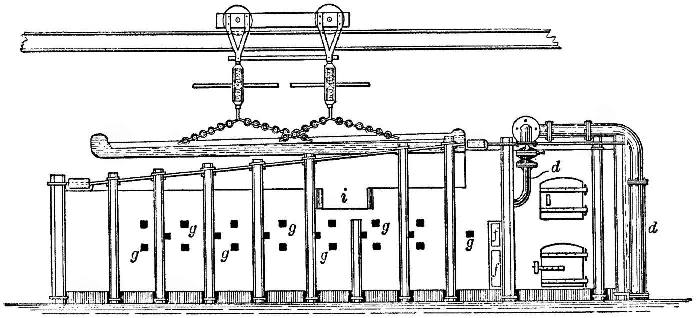

FIG. 119.—SIDE ELEVATION.

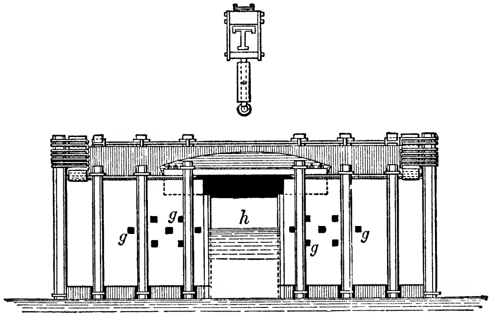

FIG. 122.—FRONT ELEVATION.

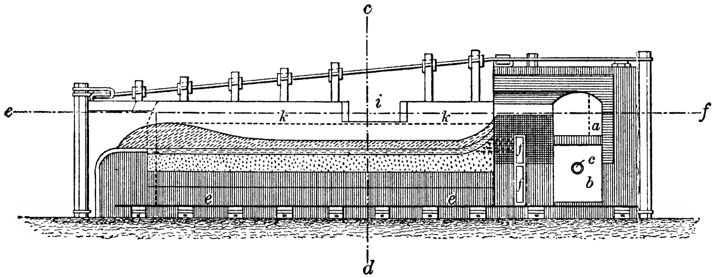

FIG. 120.—SECTION ALONG A B.

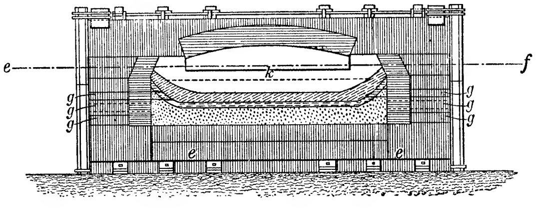

FIG. 123.—TRANSVERSE SECTION ALONG C D.

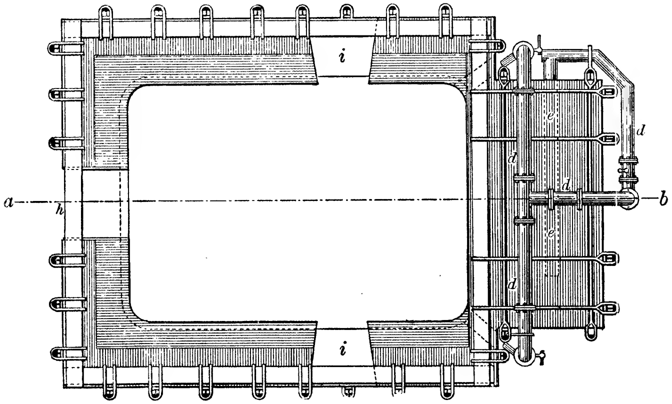

FIG. 121.—VIEW ON TOP.

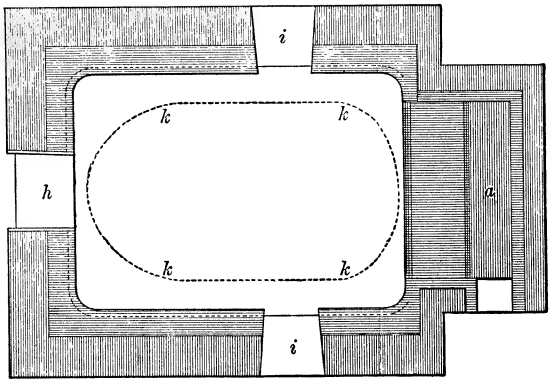

FIG. 124.—HORIZONTAL SECTION ALONG E F.

- ▨ Marl earth.
- ▥ Sandstone.
- ▤ Fire bricks.
- ▤ Fire clay.
- ░ Slag.

a. Grate.
b. Ash pit.
c. Wind pipe.
d. Main induction pipe.
e. Iron foundation plate.
f. Flues for cooling fire bridge.
g. Channels for escape of moisture.
h. Litharge channel.
i. Charging hole.
k. Lead bath.

SCALE :— 100 50 0 1 2 3 4 5 6 7 8 9 10 m

FIGS. 119-124.—CUPELLING FURNACE ERECTED BY MR. PLATTNER AT FREIBERG IN 1884.

chimney, which is inserted during the operation of the furnace so to carry away the lead fumes into the stack, which is sup-

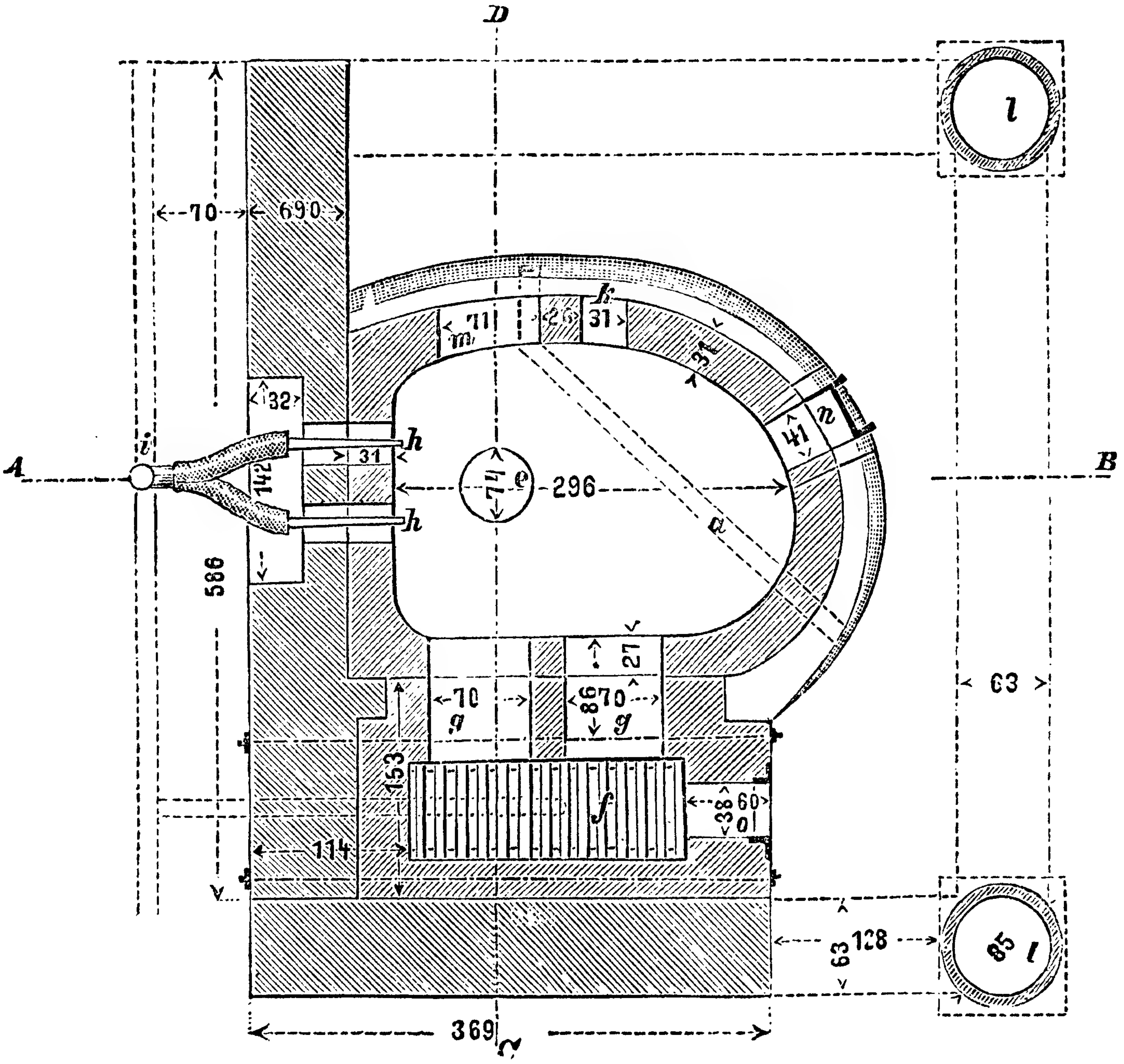

Fig. 125.—Plan.

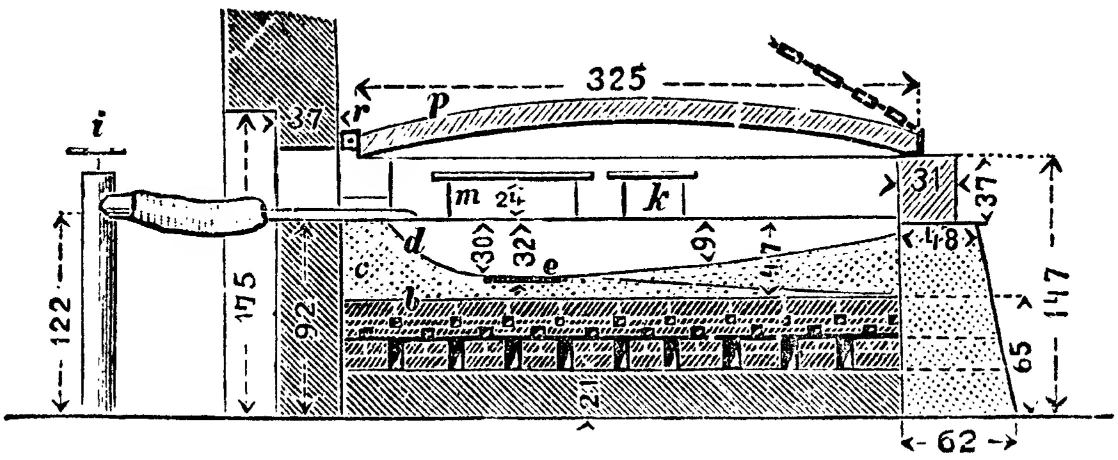

Fig. 126.—Section along A B.

Cupelling Furnace at Przibram.

ported by the columns *l*. The opening, *m*, is for drawing out the silver at the end of the operation, and is closed during the operation; *n* is the working hole where the litharge flows out; *o* the feed opening for the fire hearth; *p* the movable

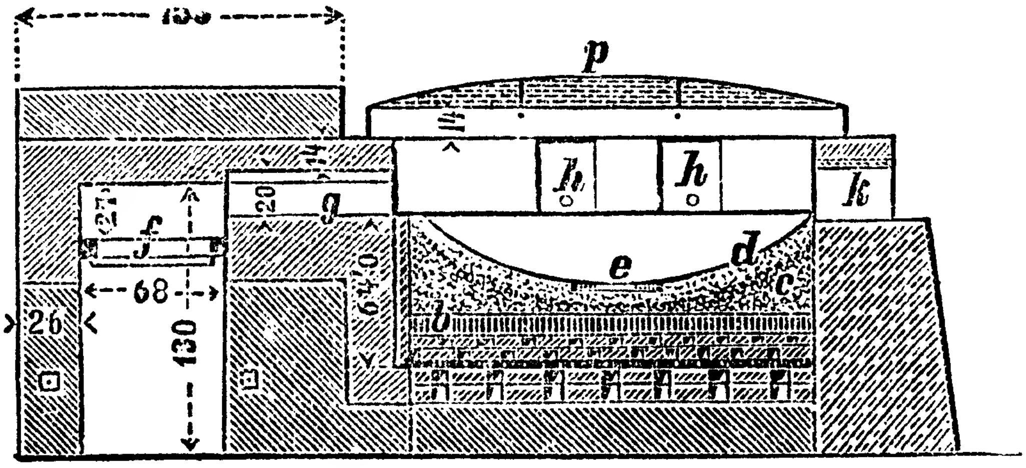

Fig. 127.—Section along C D.

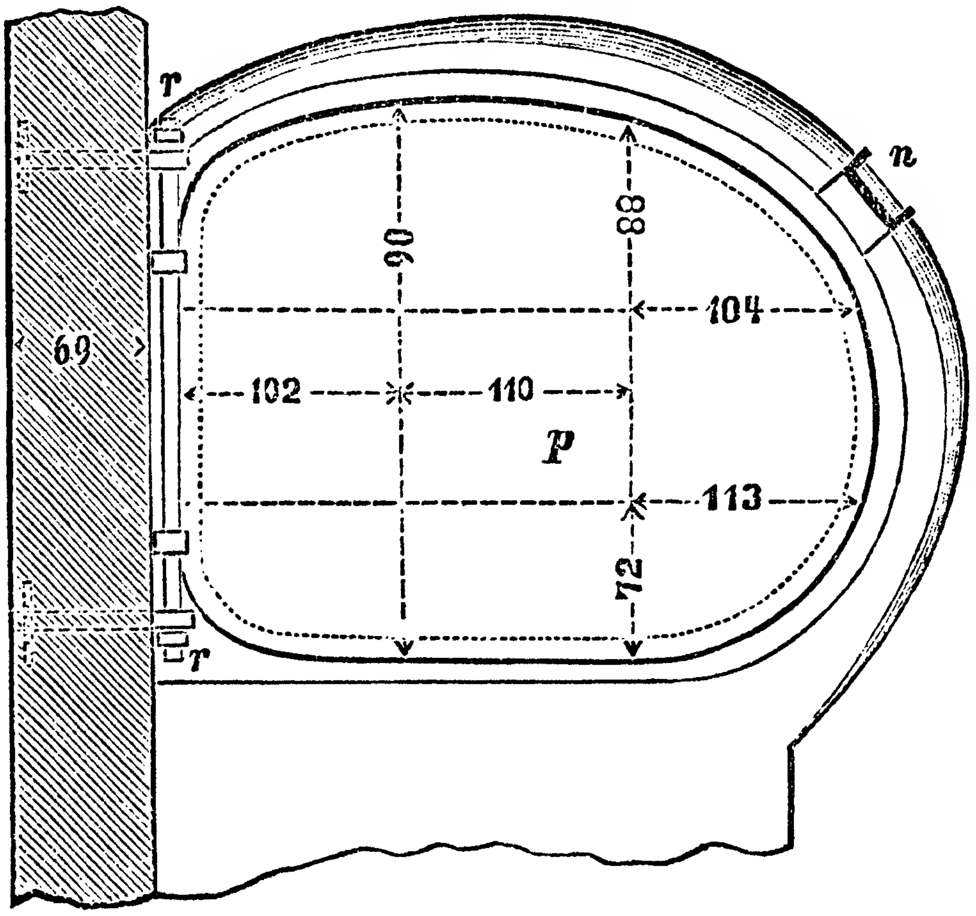

Fig. 128.—View on Top.

CUPELLING FURNACE AT PRZIBRAM.

cover, pivoting round *r;* this cover is of sheet iron, covered inside with clay.

The English Method of Cupellation.—The cupelling furnace of the kind used in England is shown in Figs. 129, 130 and 131. Fig. 129 is a side elevation; Fig. 130 a horizontal section on the line A B of Fig. 129; and Fig. 131 a vertical section on the line C D of Fig. 130. F is the fireplace; G the ashpit; H the bridge; I the test ring or hearth; J the tuyere; K K supporting and adjusting screws for the test ring; L, the flue leading to the stack, M; N a melting pot or pan in which the metal may be prepared for the hearth.

The hearth consists of bone ash, prepared from the bones of cattle. The bones are burned, and then pulverised in a stamp mill or grinding mill; and being moistened with water containing a little alkali, leached from wood ashes, the mass is beaten compactly into the test ring. This is oval in

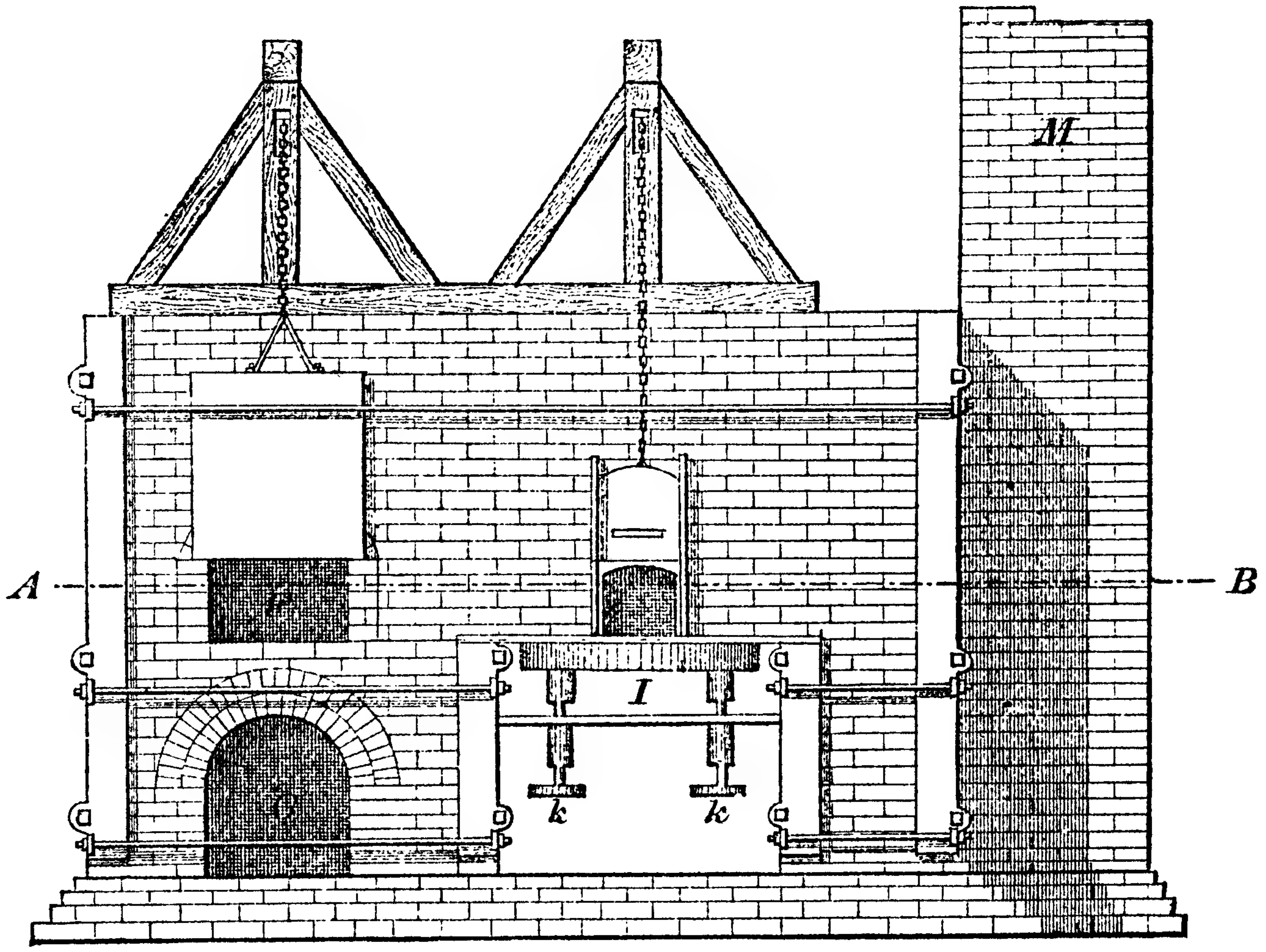

FIG. 129.—Side Elevation.

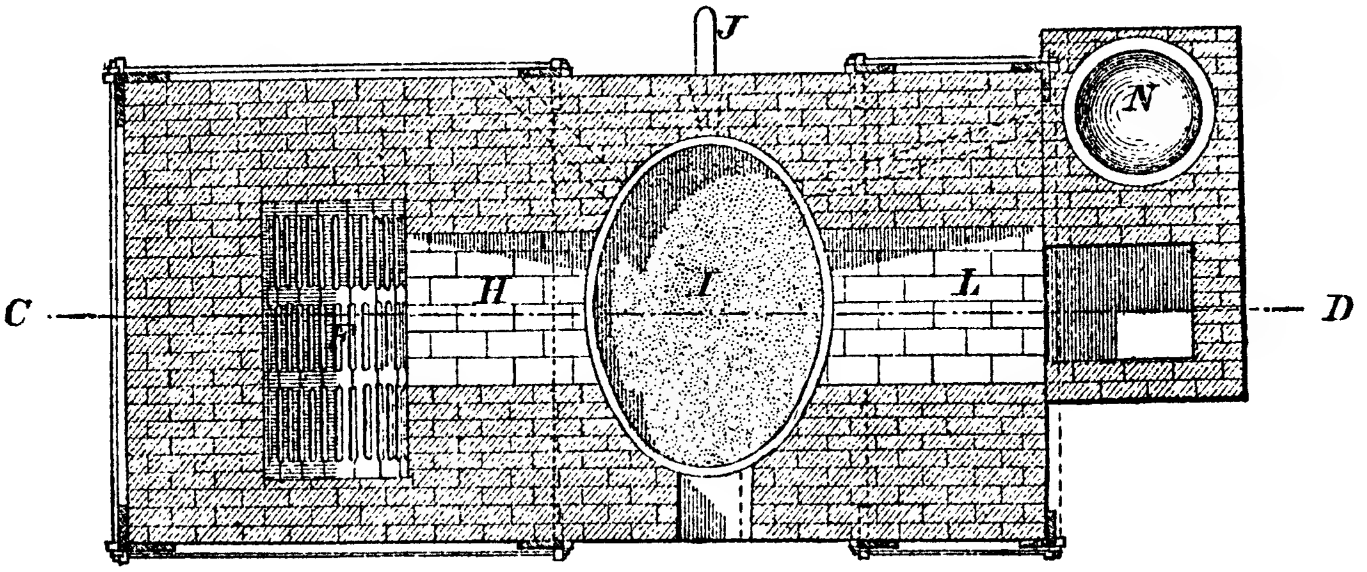

FIG. 130.—Scale, $\frac{1}{48}$. Horizontal Section.

ENGLISH CUPELLING FURNACE.

form, being 4 ft. long by 3 ft. wide. It is a rim of iron, 7 or 8 in. deep, having bars across the bottom to sustain the hearth of bone earth. The latter having been prepared in the rim, is very carefully dried, and the ring is then introduced into the cupel chamber, supported upon screws, by means of which it may be elevated or lowered, or inclined in one direction or another. When properly adjusted, it is heated, very gently at first, in order to avoid cracking. The heat from the fireplace passes over the bridge into the cupel chamber, and thence by the flues to the stack. When the hearth is well heated the lead is placed upon it, and a blast of air is introduced by means of a fan blower and tuyere. This acting upon the surface of the lead, the metal is oxidised, and the resulting litharge is allowed to run off through gutters made for its passage in the surface of the hearth into vessels placed below. As the lead is gradually oxidised, fresh supplies of metal are introduced, either in the form of pigs, or in a molten state, the pan, N, being provided

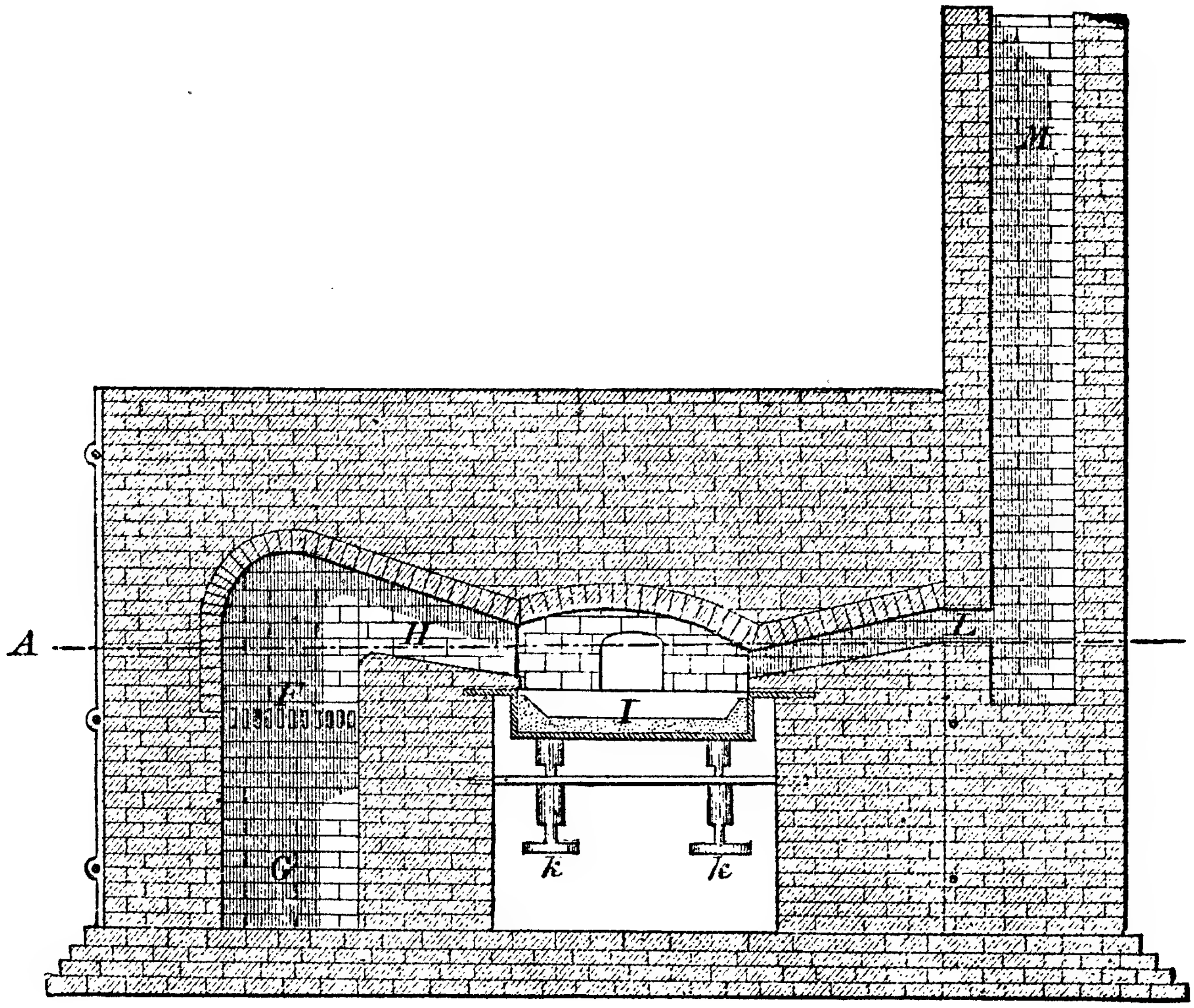

Fig. 131.—English Cupelling Furnace. Vertical Section.

for the purpose of fusing the metal, if desired. By this means the metal on the hearth is constantly enriched; and when the button of accumulated silver has become as large as may be desirable, the addition of lead is discontinued and the oxidation carried on until the lead is nearly all removed, leaving a mass of silver, of a high degree of fineness, upon the hearth. The litharge produced by this operation contains some silver. The richer portion is returned to the shaft furnace and mixed with the charge of fresh ore.

The cupel is shown in Fig. 132, the upper division of which is a plan, and the latter a longitudinal vertical section. The letters A A denote the iron hoop; *a a a* the transverse bars; E indicates the cavity in the bone-ash; B the breast; and F the space where the bone-ash is removed between the breast and the iron.

In some cupels the bone-ash is not removed from the part F, as the litharge is found to come into contact with the iron ring, on which it exerts a powerfully corroding action when such an arrangement is adopted. In place of this, however, a round hole is cut in the centre of the breast near F, to which channels are cut for the litharge to flow to it.

Manipulation of the Cupel.—The cupel, after having been formed as above described, is dried for several days, and then introduced beneath the arch, by simply being rolled on an iron car in its proper place, and by means of the screw-jacks, *k k*, is placed on a level with the hearth, as shown in Fig. 130.

The coal fire is lighted in the fireplace F, and the furnace heated carefully, lest the cupel should crack. When the temperature reaches a dark red, lead, which is kept fused in kettle near by, is poured into the cupel by means of a long-handled ladle, the blast is put on, and the fire raised until the lead reaches a bright red heat.

An opening serves to introduce into the hearth the rich lead, and the litharge flows into an iron pot.

The formation of the litharge takes place rapidly, and as fast as produced it is allowed to run off through a channel in the cupel, which is kept at a constant depth. As the lead is oxidised and its level grows lower, more molten rich lead is poured in, and thus about 500 or 600 lbs. of metal are constantly kept in the hearth. The litharge received in the cast-iron pots is allowed to cool, and taken from the vessels in a solid state, by turning them upside down. Since the silver remains in the hearth, while the lead oxidises and flows off continually, the proportion of the former metal constantly increases. When 4 or 5 tons have been added, and the mass in the hearth has been concentrated until it contains about 8 per cent. of silver, the operation of the furnace is arrested, and its contents run out into moulds. A second shift is then commenced by giving 500 or 600 lbs. of fresh lead to the cupel, and proceeding as before. Thus a single cupel will often last forty-eight hours, and 6 or 7 tons of lead may be oxidised upon it.

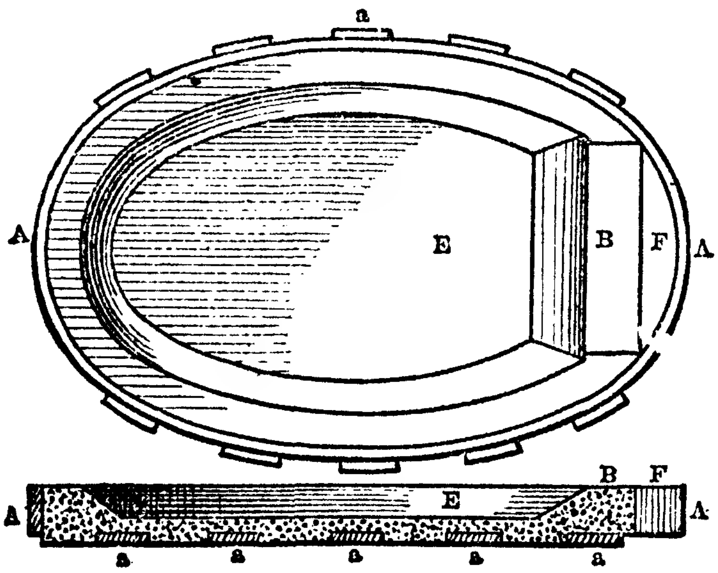

FIG. 132.—CUPEL. Plan and Section.

The lead in which the silver is concentrated until it exists to the amount of 8 per cent. is run off into moulds, and laid aside for especial treatment. The cupel, formed as above described, is placed in the furnace and brought to almost a bright red heat; about 600 lbs. of lead are then added, after having been fused in a neighbouring kettle, and a strong current of air given. The lead immediately begins to oxidise, and the litharge produced flows off into vessels provided for the purpose, while at the same time the attendant adds lead to keep the level of the cupel always at the same point. Thus some three tons of alloy of lead and silver are given, and about 500 lbs. of silver is collected in the cupel. The attendant then ceases to add rich lead, and allows the silver to solidify. The before-mentioned phenomenon of brightening is soon perceived, the fire is lowered, the wind stopped, and the cake of silver allowed to cool slowly. The hearth is now drawn from beneath the vault of the furnace, the silver taken from its bed in the bone-ash, cleaned of its coating of impurities, and given over to the process of refining. It is either purified by melting in a plumbago crucible or by a second oxidising fusion in a bone-ash cupel.

The litharge produced during the second operation of cupellation is very rich in silver, and is treated over again in furnaces.

CHAPTER XI.

EXTRACTION OF SILVER FROM LEAD AND REFINING OF SILVER-LEAD.

VARIOUS PROCESSES OF REFINING—The Calcination of Lead—Pattinson's Desilverising Process—Desilverising with Zinc—Parkes's Process—The Flach Process—The Balbach Process—The Improved Faber du Faur Tilting Furnace—The Brodie Zinc Distillation Furnace—Separation of Zinc from the Lead at the Balbach Works—Refining Silver-Lead at the Chicago Works—Results obtained at the Pennsylvania Lead Company's Works at Pittsburgh—The Giraud Process—Koch's Desilverising Apparatus—Desilverising with Zinc at the Muldner Works near Freiberg—Distillation of the Zinc Scum—The Luce and Rozan Process—The Cordurié Process—The same Process at Messrs. Rothschild's Works at Havre—Keith's Process for Refining Lead by Electrolysis.

Various Processes of Refining.—The lead produced from ore in reverberatory furnaces is sometimes so free from impurities that it may be at once used for most technical purposes. It is usually submitted to an operation called "poling," which consists in holding a log of green wood beneath the surface of the molten lead. By this means the small proportions of sulphur, antimony, zinc, and copper are separated and removed by skimming. When, however, the metal contains silver to the extent of even 1 ounce to the ton, it is economised, and the lead is submitted to the process of desilverisation, either by Pattinson's method or by the zinc process, as will be presently described.

The hard lead produced from smelting slags and poor ores in the blast furnace must be softened or calcined to remove the foreign substances it contains. This is called the calcination of lead. In some works the lead is liquated, by being placed on the highest part of the bed of a reverberatory furnace and allowed to liquate, whereby the more easily fusible lead leaves a mass containing most of the sulphur, antimony, iron, and copper. If this operation be carefully conducted, the amount of impurities left in the lead will not reach more than 1 per cent.

Lead containing antimony is softened by oxidation in reverberatory furnaces at a higher temperature. The operation is usually performed in a furnace which has a cast-iron rectangular pan for its bed. The charge of pig lead may consist of from 10 to 20 tons. After melting, or rather liquation, the more infusible matters are removed by means of a shallow skimmer, perforated with holes, and the heat is then got up until the mixed oxides of lead and antimony are melted. When the slag thus formed is very liquid, it is sometimes thickened with lime to facilitate its removal. In this operation the antimony is oxidised along with a quantity of lead which is obtained by re-smelting the dross, until, upon repetition of the calcination, the slags finally yield an alloy of lead and antimony, which is generally used for printers' type-metal.

The principal processes for the refining of lead, and the separation of the silver, are given in the following pages.

The Calcination of Lead.—Very few smelting works produce lead of sufficient purity to permit the lead ingots being submitted directly to the refining process, especially if they contain lead and antimony. They have to be submitted to an intermediary process—the calcining—by exposing a large surface of the fused metal to the oxidising flame in a reverberatory furnace. The metal must not be fused at a very high temperature, and the separation of the foreign metals is effected by liquation, the metal appearing on top of the fused lead as a pasty dross, which may consist of zinc, iron, copper, or antimony; this crust is raked off to be re-smelted again. Even at a low heat antimony and arsenic, if present, will volatilise to a certain extent. The operation is also called lead softening.

To facilitate the operation, the lead ingots can be previously smelted in a cast-iron kettle placed near the furnace, and heated by a separate fire-place, and the molten metal ladled on to the hearth of the reverberatory furnace.

The refining or calcining furnace for the sublimation of the antimony contained in the crude metal, and the consequent improvement of the lead, consists of a bath, or cast-iron pan, about 13 ft. long by 5 ft. 8 in. wide and 8 in. deep, the metal being an inch thick. The pan is set in brickwork, the construction of which is shown in elevation, plan, or horizontal section and transverse section in Figs. 133 to 136. Fig. 133 is a side elevation; Fig. 134, a horizontal section through E, F, of Fig. 133; Figs. 135 and 136, transverse sections through A B and C D of Fig. 133.

The pan rests on a substantial foundation, and is enclosed by side-walls of common bricks, about 10 in. high, over which an arch is turned, as shown in the section. A narrow space is left between the pan and the enclosing masonry to allow for expansion. At one end of the structure is a fireplace and ash-pit. The flame passes over a bridge, which separates the fireplace from the pan, and thus over the surface of the metal contained in the pan, toward the stack at the opposite end. There is a horizontal channel passing through the bridge, behind the pan, opening at the sides of the furnace and communicating by vertical passages with the interior, by which means air may be admitted to the charge. Doors are provided in the side of the furnace for the purpose of skimming off a crust or scum, consisting of lead and antimony, that collects on the surface while the operation of calcining is in progress. The charge is also introduced through these doors. There is a tap near the end of the pan on one side for the purpose of drawing off the refined metal. At the base of the stack is a chamber for the collection of the oxidised antimony that may condense in the stack and fall to the bottom. The whole structure is firmly bound together by irons and bolts, as shown in the drawings.

In the drawings, G is the fireplace, H the ash-pit, I the bridge, J the air channel through the bridge, K the pan, L the spout, M the openings for putting in and working the charge,

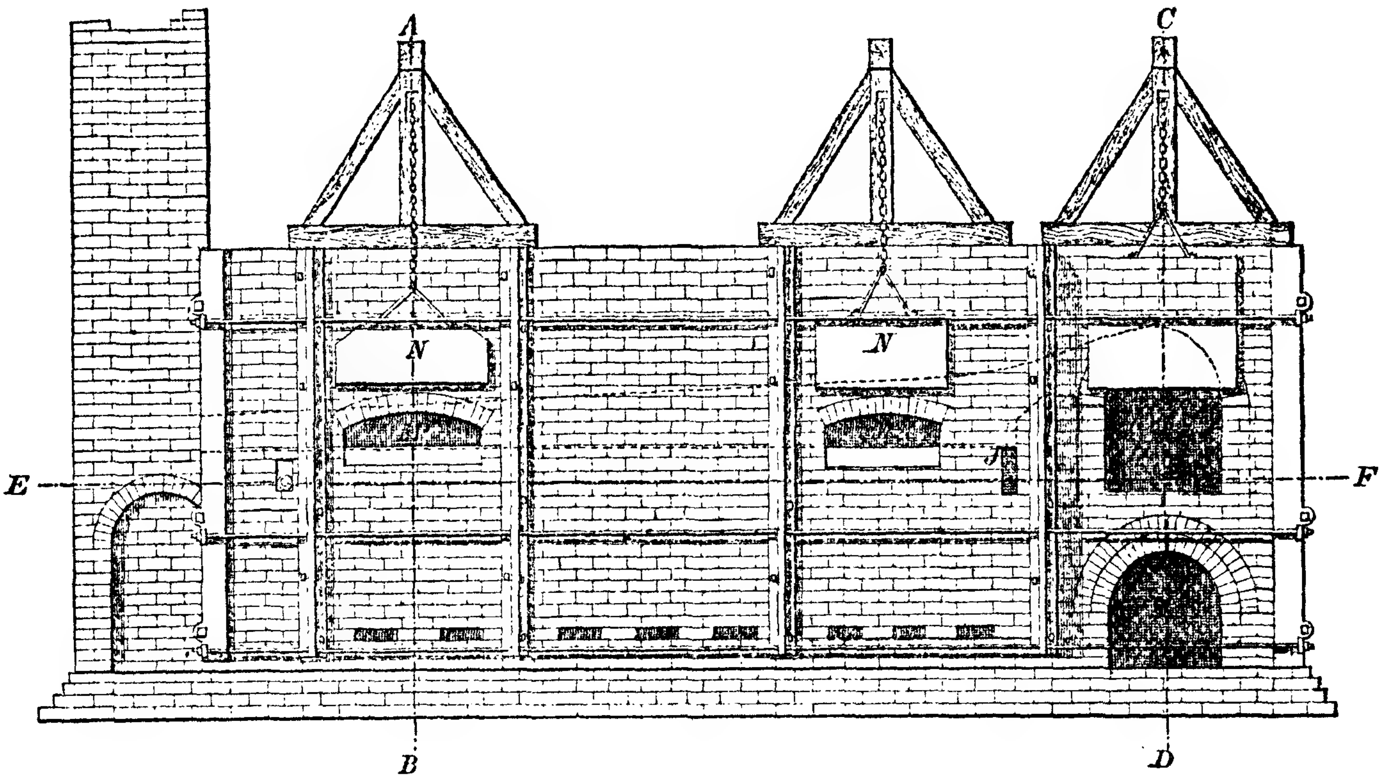

FIG. 133.—Side Elevation.

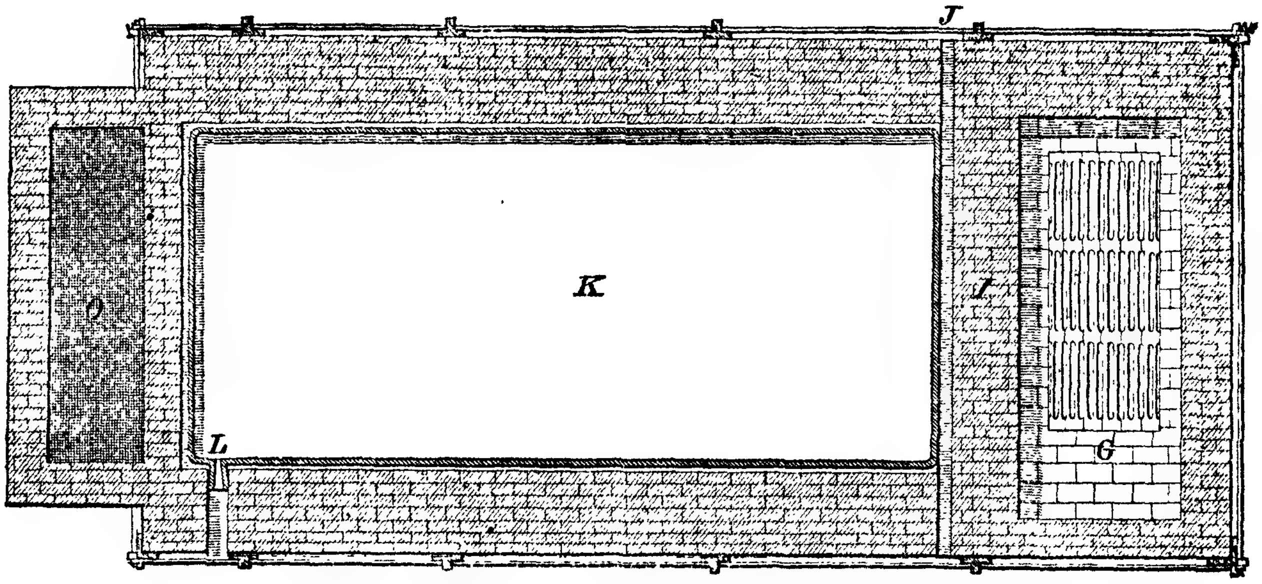

FIG. 134.—Horizontal Section through E, F.

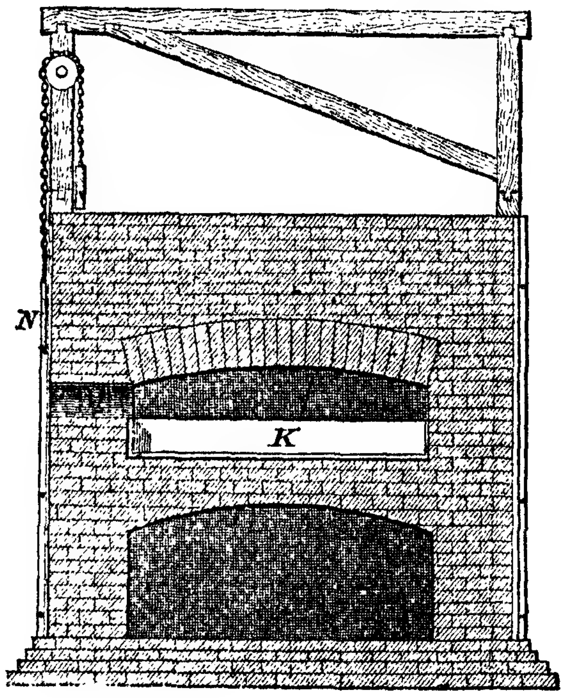

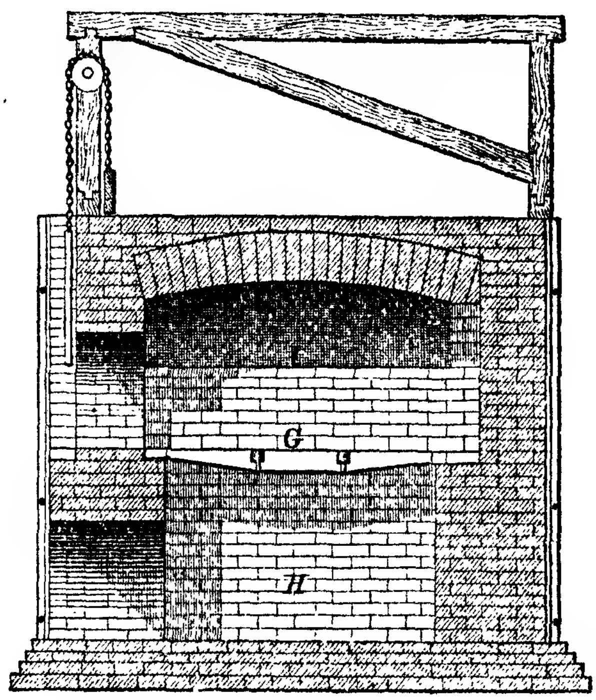

FIG. 135.—Transverse Section through A, B. FIG. 136.—Transverse Section through C, D.

LEAD REFINING FURNACE.—Scale, $\frac{1}{64}$.

N the doors, O the chamber at base of stack for the accumulation of the oxidised antimony.

The furnace is charged by carrying in the impure lead in the form of ingots by means of a shovel, or by ladling it into the pan after it has been brought to a fluid condition. The amount treated at once varies from 6 to 10 tons, it always being to the advantage of the manufacturer to have a large furnace; since more metal can then be treated with one heating. When now a strong fire is made in the fireplace, D, the easily oxidised impurities in the lead are acted on by the heated air and gases, float upon the surface, and may be scraped off by the workman. The appearance of the scum thus produced indicates the progress of the operation. When the lead appears to be almost clear, the tap hole of the pan is opened, and the contents run into an exterior basin, from which it can readily be ladled into moulds. The length of time necessary for purifying lead by this means varies according to the amount of the adulterations present. For some very impure varieties 30 hours are required, and from 100 pounds of the metal used 70 to 75 lbs. of lead are obtained.

In Saxony a small reverberatory is employed in this preliminary process of purification. Two tuyeres pass through the sides of the furnace, and a weak blast of air is forced through these upon the surface of the metallic bath, thus accomplishing the oxidation that is produced in the case above described, by the air entering at the fireplace.

Pattinson's Desilverising Process.—This admirable process was discovered by Mr. H. J. Pattinson, at Alston, in Cumberland. The process depends on the fact that pure lead crystallises at a temperature above that of lead alloyed with a certain proportion of silver, so that if a pot of melted lead be allowed to cool gradually and be carefully stirred while cooling, the contents will separate into masses of crystals of lead which may be fished out with a perforated ladle, and a liquid portion which will contain much the larger proportion of silver. The crystals of lead thus separated and extracted, although probably free from silver in chemical combination, are found to take up some of the liquid metal containing the silver, so that the separation of the two metals cannot be effected at a single operation. By repeating the operation, however, the separation is carried further by successive stages, so that enriched lead containing from 400 to 600 ounces per ton may be obtained, whilst the poor lead is brought down to 10 dwts. per ton.

The operation is usually conducted* in a series of from 9 to 12 cast-iron pots, which, if worked by hand, contain up to 6 tons of metal each, but when cranes are employed for working the ladle 10 ton pots are more generally used; they are ordinarily 5 ft. 4 in. in diameter and 2 ft. 6 in. deep. A pot at one end of the series has a capacity of only two-thirds of each of the others, and is known as the *market pot.*

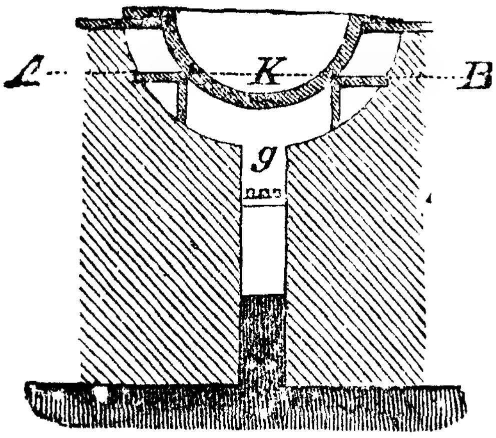

FIG. 137.

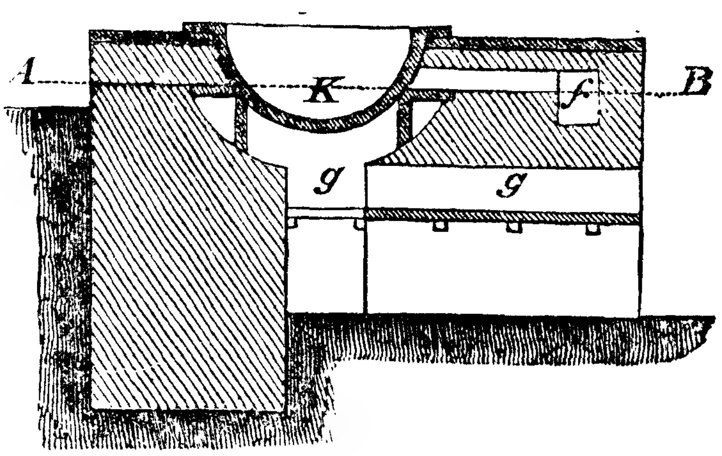

FIG. 138.

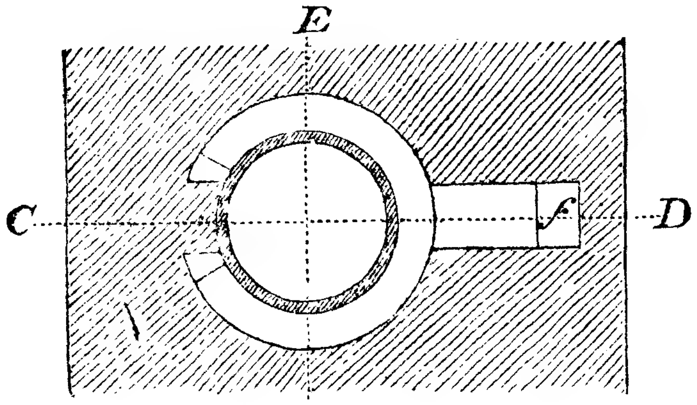

FIG. 139.
PATTINSON'S DESILVERISING PROCESS. Kettles in Section.

The kettles in which the rich lead is fused are built in and supported by massive masonry, as shown in the accompanying

---

* For the particulars here given I am indebted to Lamborn's "Metallurgy of Silver and Lead."—M.E.

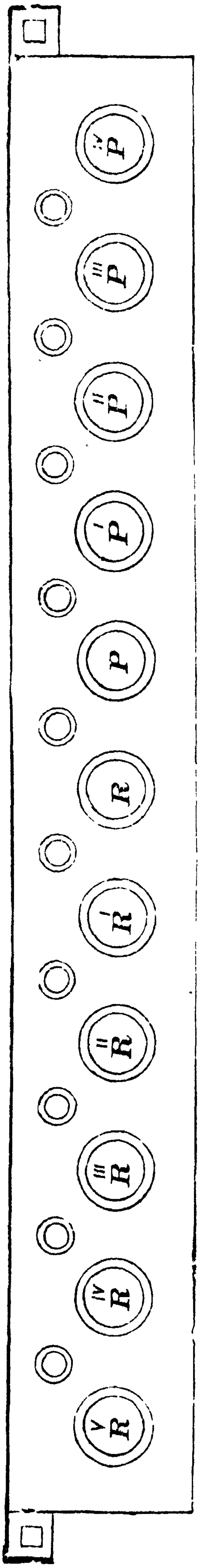

Fig. 140.—Pattinson's Desilverising Process. Arrangement of Kettles.

illustrations. Fig. 137 is a vertical section along the line E F; Fig. 138 a vertical section along the line C D; and Fig. 139 a horizontal section along the line A B. The fire, built in the grate, G, plays around the under side of the kettle, K, and the products of combustion pass off to the chimney through the flue *f*. The size of the kettle employed varies with different localities. It should never be so small as to hold less than 2½ tons, and in some furnaces kettles holding 10 tons are employed. Of these kettles 9 or 11 are used in a single establishment, and they are placed in a long building in a row, as indicated in Fig. 140.

Each pot is provided with a separate fire-place, and is heated by a circular flue passing round it, which can be closed when required by means of a damper. This communicates with a main flue under the level of the floor parallel with the line of pots.

If lead having 10 ounces of silver to the ton is to be treated, the kettle, P, is selected for commencing the operation, and say 140 cwt. are placed in it, and heated rapidly until fused. The heat is continued until the metal is raised to a temperature somewhat higher than that necessary to give it complete fluidity. The fire is then put out, and the mass in the pot partly cooled by throwing water upon it. This must, however, be done with the utmost caution, since the water may become so surrounded by fused lead, that the sudden formation of steam will lead to explosions dangerous to the men employed, and leading to a loss of metal. If a little more time is allowed, the cooling will take place without the necessity for the employment of water.

The mass begins to cool at the surface and along the sides of the kettle, and the crusts thus formed are carefully detached by means of a bar, and thrown back into the fluid, the cooling being thus caused to go on regularly. The stirring is at the same time continued regularly, that the crystals may form as free as possible from silver.

The ladle represented in Figs. 141 and 142 is employed for lifting out the crystals. The lower part is formed of iron and the upper of wood, that it may be more conveniently handled. It is kept warm, and before being used is plunged several times into the fused metal, that it may assume entirely the same temperature.

When the crystals have formed in a sufficiently large quantity, a ladleful is raised above the surface, and allowed to drain a few moments, and then, by a skilful movement of the workman, thrown into the neighbouring kettle, P′. The ladle is then re-warmed, and cleaned of the lead hanging to it, and the process repeated until about 80 cwt. are thrown into the kettle, P′. This portion is found to contain about 5 ounces of silver to the ton, or 50 per cent. less than the original lead. An additional 20 cwt. is now ladled out, containing about 10 ounces to the ton, and thrown into R. The 40 cwt. now remaining in P contain 20 ounces to the ton, and this is transported by means of a ladle without perforations to the kettle, R′.

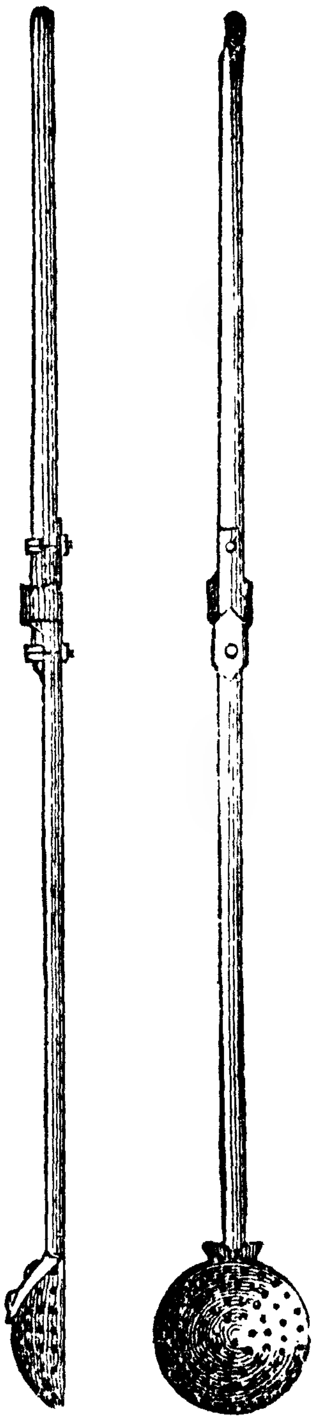
FIG. 141. FIG. 142.
LADLE.

The kettle, P, is now ready to be filled again, and the same course pursued. When the kettle, P′, is filled with lead holding 5 ounces, it is allowed to cool and crystallise in its turn, and 80 cwt. of crystals are ladled from it, with 2½ ounces of silver, and thrown into P″; 20 cwt. with 5 ounces are laid aside to be returned to P′; and the remaining 40 cwt. with 10 ounces are transported to P or R. P″ is treated in the same way when full: 80 cwt. with 1¼ ounces are thrown into the kettle, P‴; 20 cwt. with 2½ ounces are laid aside and given back to P″; and the remaining 40 cwt. with 5 ounces are passed to P′. The lead in P‴, with 1¼ ounces to the ton, is either considered sufficiently free from silver to enter commerce, and is simply fused and moulded for market, or it is made still poorer in silver, even to 12 dwt. per ton; but in many furnaces it will not pay to descend to this limit.

At the opposite end of the row of pots, the rich lead is at the same time being treated. When R′ has been filled with lead holding 20 ounces, it is fused and then allowed to crystallise: 80 cwt. are ladled from it into R, with 10 ounces of silver to the ton; 20 cwt. with 20 ounces are laid aside to be treated again in R′; and 40 cwt. go into R″, carrying with it silver to the amount of 40 ounces to the ton. When R″ is full, it is subjected to the same treatment, and R‴ receives 40 cwt. with 80 ounces to the ton. The contents of R‴ are crystallised, and produce for R⁗ lead with 160 ounces to the ton, which in its turn is treated in the same way, and finally, 40 cwt. with 320 ounces to the ton is obtained in R′′′′′. In some furnaces concentration is carried still higher, and lead with 640 ounces is obtained. This is ready for the cupelling furnace, and is moulded into blocks and transported to that apparatus.

During the above operation a quantity of oxide is produced, and when the charge in each pot is melted down it is always carefully skimmed before cooling. The amount of dross from working lead containing 20 ounces per ton may be estimated at 25 per cent. of its weight. The ladle employed for hand work is 16 in. diameter, 5 in. in depth, and is pierced with half-inch holes.

Under certain circumstances Pattinson's process is not applicable with profit, as when the litharge produced by cupellation may be readily sold, and at a price higher than the corresponding quantity of lead. But when those products are difficult to sell, the method of concentration becomes advantageous.

The Pattinson process has now been largely superseded by those of Messrs. Parkes, Rozan, and others, which will be found described below.

Desilverising with Zinc.—Parkes's Process.—Desilverising by means of zinc was invented by Alexander Parkes, of Birmingham, in 1850, and was carried out in the first instance at the works of Messrs. Sims, Willyams, & Co., at Llanelly, in 1859. But not only at these works, but at Friedrichshütte, near Tarnowitz, it was abandoned on account of practical difficulties. These, however, have now been overcome, as in 1866 the operation was again attempted at the works at Commern and at Call with success.

When argentiferous lead and zinc are melted together, and then allowed to cool, an alloy of zinc and lead is formed which solidifies on the surface, and which contains also the greater part of the silver. The fluid part of the charge will contain about one-half to one per cent. of zinc, which has to be removed by oxidation in a softening furnace or otherwise.

In the original " zinc process," the subsequent treatment of the zinc-lead alloy was performed by liquation in an inclined iron retort, heated somewhere above the melting point of lead. This operation produced lead with about 10 ounces of silver per ton, and left a more infusible alloy, having a composition of nearly one-half lead and one-half zinc, with the greater part of the silver. The zinc alloy was then distilled with a little lime and coal dust, in clay retorts, on the Belgian plan, to recover the zinc, leaving in the retort metallic lead and pulverulent matter. The lead was re-melted and cupelled for the silver, the residual matter scraped out of the retort, and smelted with the ordinary charges of the lead furnace.

Such was the process as originally devised and carried out by the inventor. The treatment of the argentiferous zinc alloy, and the removal of the zinc from the desilverised lead, afforded scope for a number of plans. These have been put in practice with more or less success, and have given rise to numerous patents.

One of the best methods of carrying out the zinc process is as follows:—At a height of about 8 feet from the level of the floor three cast-iron pots are placed in brickwork over separate fireplaces; the largest of these has a capacity of about 12 tons of lead, while the other two are much smaller, and contain about 3 tons of metal. The lead to be desilverised is melted in the larger pot, where the usual quantity of zinc is added in three successive portions, and the argentiferous alloy removed to one of the smaller pots. In this pot a portion of the associated lead is separated by liquation, and the zinc alloy is taken out by shallow perforated ladles.

When one of the smaller pots has become filled with skimmings, it is carefully liquated, whilst the other pot serves in the meantime for the reception of skimmings from the larger pot. The lead liquated in the smaller pots, containing a considerable proportion of zinc, is added to the next charge of original lead. That remaining in the large pot after removal of the third zinciferous skimmings is tapped into the pan of an "improving furnace" (see Fig. 161 in Plate, p. 290), situated at a lower level, where it is kept at a full red heat during about twelve hours, and is occasionally skimmed with an iron rake. At the expiration of this time it is drawn off into a cast-iron pot, and ladled into moulds as market lead.

The zinc process may also be carried out in the following manner:—The argentiferous lead is melted in a kettle, and the dross is removed. The temperature of the lead is then raised to the melting point of zinc, and zinc is added, and both metals are mixed intimately by stirring, care being taken to keep up the temperature during this period. After the mixture is completed, the fire is damped with wet fuel, so that the metal mixture may cool slowly, and the cooling may take place mainly from the surface. As soon as the formation of a ring of zinc round the pot has taken place (about 1 inch in thickness) the skimming is commenced. The ring of zinc is first removed, one labourer loosening it, and another catching the loosened pieces in a perforated ladle, so as to prevent anything from falling back into and enriching the subjacent lead. This completed, the solidified zinc crust is taken off with perforated ladles. As the metal-mixture cools more and more, new portions of argentiferous zinc solidify on the surface, and are also taken off. The surface of the skimmed lead has an indigo-blue colour. The skimming of the lead is stopped as soon as an assay of the lead shows sufficient desilverisation, and the desilverised lead is then given over to the refining process. During skimming, care must be taken to prevent the formation of too thick a ring of zinc.

The zincification with a single addition of zinc completes each operation without interruption, and the skimming of the metal surface is continued until perfect desilverisation.

The amount of zinc absorbed by the process, though chiefly dependent on the contents of silver in the lead, cannot be precisely determined, because it maintains no fixed proportion to the contents of silver; and, moreover, a number of accessary circumstances—such as impurities in the lead, manipulation, &c.—influence the result.

Lead containing from 10 to 100 ounces of silver is treated with from 1¼ to 2 per cent. of zinc, raising the quantity of zinc according to the silver contents.

At the Friedrichshütte, near Tarnowitz, the consumption of zinc, in treating lead with 30 ounces of silver, was formerly about 1½ per cent. Treating lead with higher contents of silver, it was found that this consumed comparatively less zinc, and consequently it was supposed that the zinc in the skimmings resulting from poor lead was not entirely saturated. This supposition led to experiments tending to make use of the second and third zinc skimmings of a previous charge, by giving them to a subsequent charge as first addition of zinc. The result of these trials has proved that 150 pounds of zinc sufficed to desilverise about 220 centners of base bullion, whereas from 310 to 325 pounds were used formerly. This corresponds to a decrease in the consumption of zinc of from 1½ to 0·68 per cent.

Impurities in the lead to be desilverised cause the formation of dross on the metal surface. The dross must be removed before adding the zinc.

Antimony hinders a complete desilverisation; and lead containing a large quantity must be refined before zincification. Zinc does not extract the antimony from lead; antimony is only removed by subsequent refining.

Copper has a greater affinity for zinc than silver, and can therefore be extracted from lead, without taking much silver into the alloy, if zinc is added in such quantity as to saturate only the copper. This is another merit of the Parkes process, as it effects the production of lead free, or nearly free, from copper.

The extraction of copper from lead by zinc is so complete that Mr. Baker has founded upon it a method of decopperising lead. It is evident that copper in the argentiferous lead increases the consumption of zinc. Gold has also a greater affinity for zinc than silver, and the latter is only extracted after gold and copper have been removed. Use being made of this fact, the process is so regulated that the first zinc skimmings contain all the gold and copper.

At Lautenthal 49½ lbs. of zinc are added to 27,500 lbs. of lead for the extraction of copper and gold. The skimmings contain all the gold and copper, and are not much richer in silver than the original lead. The silver made from these skimmings contains from 35 to 38 ounces of gold or 0·12 to 2 per cent.

At Call, 180 lbs. of zinc are added to 300 centners (over 15 tons) of base bullion. About 10 centners of zinc skimmings are obtained, which contain the gold and copper. This gold-copper scum is treated with the residues of the treatment of the argentiferous zinc, and the silver finally obtained contains 29 ounces or 0·1 of gold.

Bismuth is not extracted by zinc.

The Flach Process.—The treatment of the argentiferous zinc alloy presented at the outset many difficulties, but these were finally overcome by the adaptation of proper distilling apparatus. The methods first used were very numerous, and consisted in the removal of the zinc by oxidation, scorification, chlorination, and distillation. The Flach process, in which oxidation and scorification were utilised, consisted in passing the liquated zinc alloy, coupled with slag, through a blast furnace at a low temperature and a low pressure of blast. The zinc was oxidised and conveyed into the slag, and rich lead produced, which was subjected to desilverisation, either directly or after previous refining.

Large losses of silver are caused in the blast furnace by the volatilisation of the zinc; the slags produced are highly zinciferous. In some localities, dezincification has been tried by chlorination, whereby the zinc scum is either melted with chloride of lead, chloride of sodium—a mixture of chloride of sodium and sulphate of lead—or Stassfurth salts (chloride of sodium, potassium, and magnesium). The resulting slag is passed through the blast furnace, and the remaining lead cupelled.

The experiment has also been made of adding the zinc scum during the cupellation of lead, so as to oxidise the zinc by the litharge formed during cupellation, and to concentrate the silver in the lead. Dezincification by distillation is the method now generally adopted, and is fully described in the following pages.

The Balbach Process.—This process has been described as consisting—First, in a cheap and expeditious method of separating silver or other precious metals from lead, when zinc is used in the process of separation, by first combining the lead which contains the silver or other precious metals with zinc, and—after the alloy thus formed has been sufficiently agitated to cause the zinc to take up the silver or other precious metals previously contained in the lead—then subjecting the alloy to a " sweating " process, by heating it in a furnace with an inclined hearth to such a degree that the lead will melt (without, however, melting the zinc, the silver, or other precious metals). The largest portion of the lead is thereby caused to run off, leaving the zinc, silver, and other precious metals, together with a small quantity of lead, unmelted in the furnace. Secondly, in a movable black lead retort applied in a furnace in such a manner that it can be turned up for the reception of the alloy of zinc, silver, and other precious metals with a small quantity of lead, and after the zinc has been distilled and condensed in a separate condenser can be readily turned down to discharge the precious metals with the impurities still remaining mixed with them to be subsequently refined. Thirdly, in combining with a retort a furnace supported by gudgeons, which have their bearings in stationary frames or standards, in such a manner that the furnace together with the retort can be turned, and the retort discharged and afterwards recharged, without disturbing any part of the furnace or interrupting the operation of the same. The furnace thus described is the invention of M. Faber du Faur.

In the subjoined illustrations Fig. 143 represents a vertical section of the movable retort; Fig. 144 is a side view of the furnace hung in gudgeons, and shown in position for discharging the contents of the retort; Fig. 145 is a vertical section of the same showing the furnace in its upright position; and Fig. 146 a similar section of a modification thereof. Similar letters indicate the same parts throughout the drawings.

In practice, in the first instance, an alloy is prepared by combining lead containing silver or other precious metals with a sufficient quantity of zinc. This part of the process may be effected by melting the lead in a kettle, and then adding to it the melted zinc, or by first melting the zinc in the kettle and adding to it the lead in a fused state. The lead after having been refined is melted in a low heated furnace with an inclined hearth, and runs thence into the kettle containing the melted zinc. In this there is the advantage that the lead leaves some of its impurities in the furnace, and consequently is still further refined before it is mixed with the zinc. The mixture is next stirred in the kettle about fifteen minutes, or until the zinc has taken up all the precious metals from the lead, and then the alloy is cast into pigs of suitable size. Usually from 20 to 80 pounds of zinc are put in the kettle to melt, and one ton of lead is placed in the furnace to be melted and mixed with the zinc, the percentage of zinc to be used depending upon the richness of the lead in the precious metals.

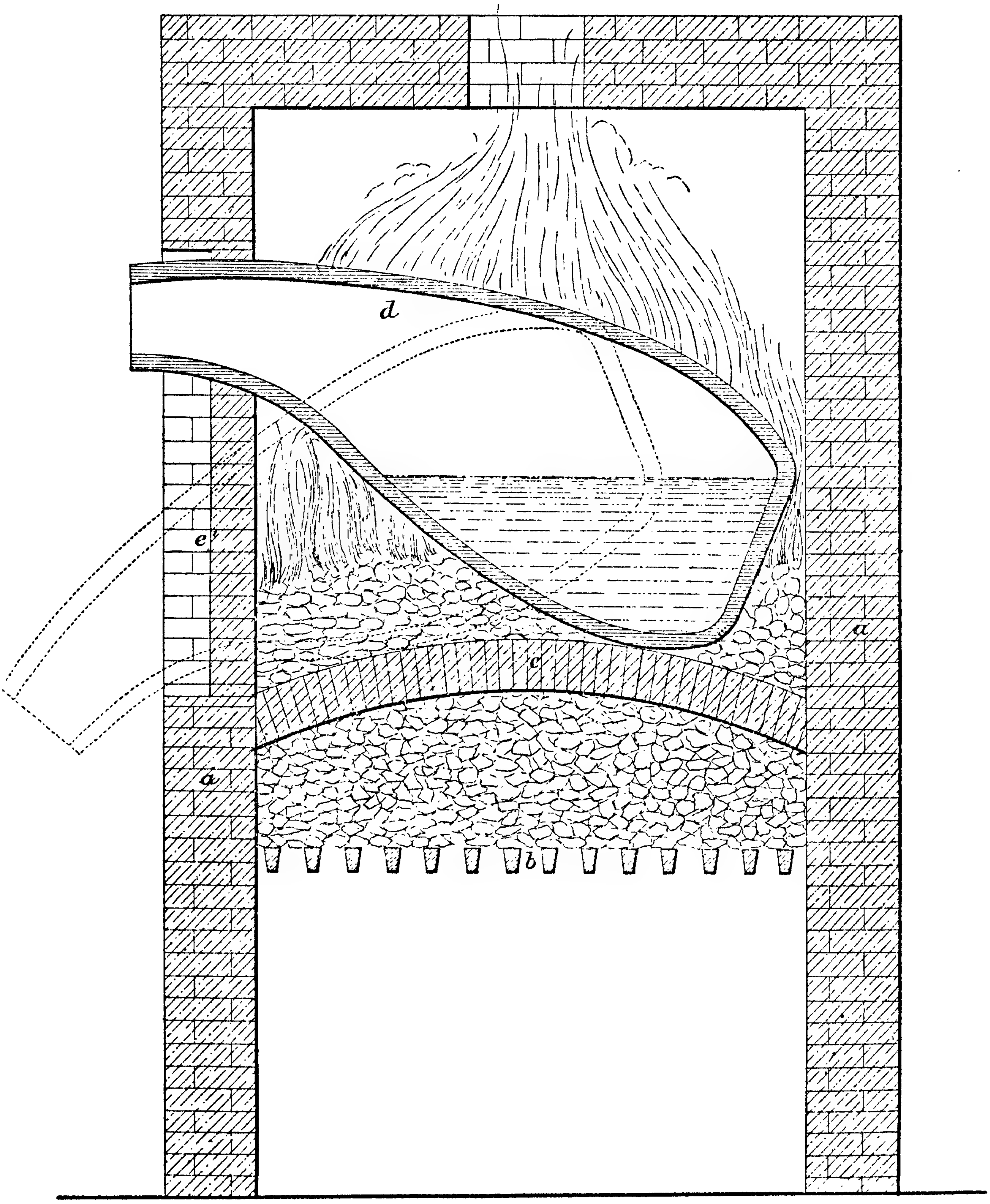

Fig. 143.—Balbach Process. Vertical Section of Movable Retort.

After the alloy of zinc with the lead and precious metals has been cast into pigs, the pigs are placed in a furnace with an inclined hearth and heated sufficiently to melt the lead, but not enough to melt the zinc or the precious metals—an operation technically known as "sweating." The largest portion of the lead is thus caused to run out of the furnace, when it is cast into pigs to be further refined if necessary into merchantable lead, while the zinc, together with the precious metals and a small quantity of lead, remains on the hearth of the furnace. By this means the lead is separated from the zinc and precious metals (it is claimed) much better and in less time than by the processes heretofore used for the purpose, in which the stirring in the kettle is continued for two or three hours, when the fire is allowed to cool down and the zinc in combination with the precious metals as the same rise to the surface are skimmed off, the lead being drawn off afterwards.

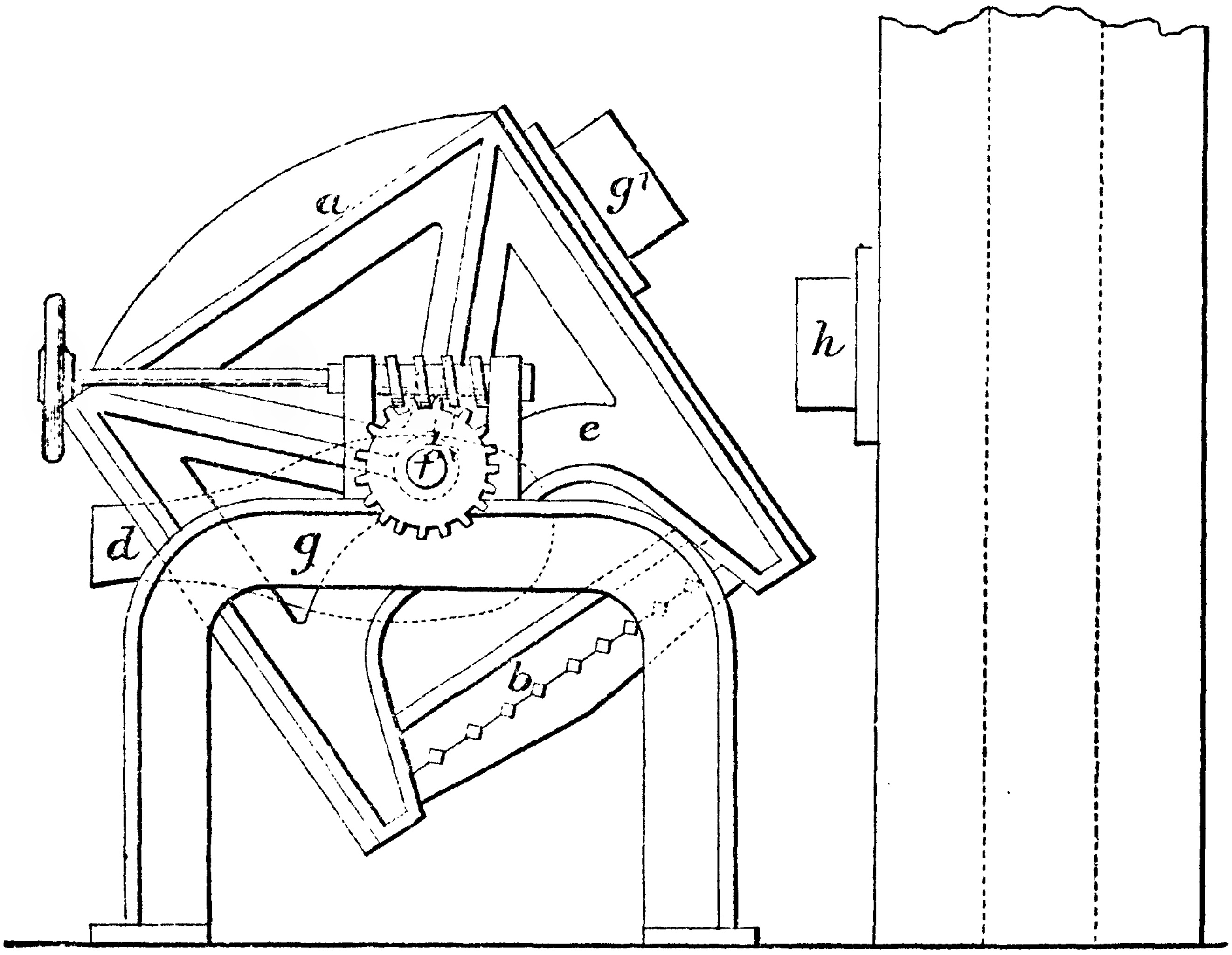

FIG. 144.—BALBACH PROCESS. Side View of Furnace.

The sweating process being completed, the dross remaining on the inclined hearth of the furnace, and consisting chiefly of zinc mixed with precious metals and a small quantity of lead, is introduced with some fine coal into the retort *d* (see Figs. 143 and 145). The retort is enclosed in the furnace *a*, which is built up of brick, and provided with a grate *b* and a bridge or bearer *c* capable of supporting the retort, and so formed that coal may be packed at its sides and also at the sides of the retort. To the sides of the furnace *a* are secured brackets, *e*, by preference made of cast iron; from each of these brackets projects a gudgeon, *f*, which has its bearings in a standard *g*, situated one on each side of the furnace, and of such a height that the furnace can be conveniently turned on its gudgeons.

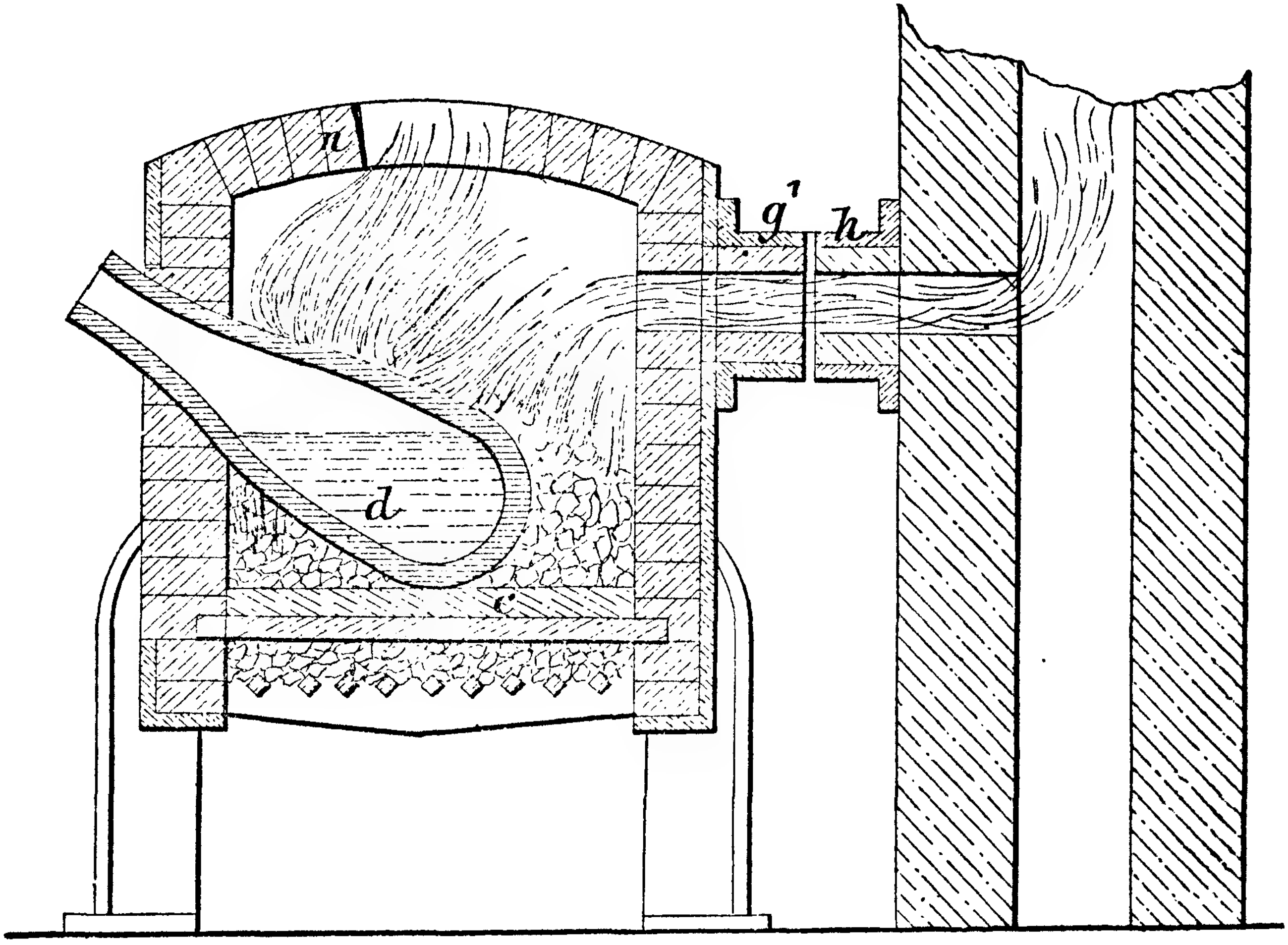

FIG. 145.—BALBACH PROCESS.—Vertical Section of Furnace.

From the rear wall of the furnace projects the smoke flue *g*′, and if the furnace is brought in an upright position, as in Fig. 145, this smoke flue bears against the mouth of a flue *h* leading to the chimney or smoke stack, while it does not interfere with the operation of swinging the furnace on its gudgeons as shown in Fig. 144. The retort is so arranged in the furnace that it occupies an upright or upwardly inclined position, when the furnace is brought in the position shown in Fig. 145; but by turning the furnace to the position shown in Fig. 144 the retort is brought into its discharging position. When a flame fire is required, the fireplace may either be attached to the movable furnace, or it may be separate as shown in Fig. 146, where *a′* represents the movable furnace, and *b′* the fireplace, which communicates through a flue *c′* with the furnace, while the flame after having circulated through the furnace passes through a flue *d′* to the chimney flue *h′*. This furnace is so constructed that on being turned on its gudgeons it swings away from the flue *c′* and chimney flue *h′*. The position of these flues may be varied in different ways. By these means the retort can be conveniently

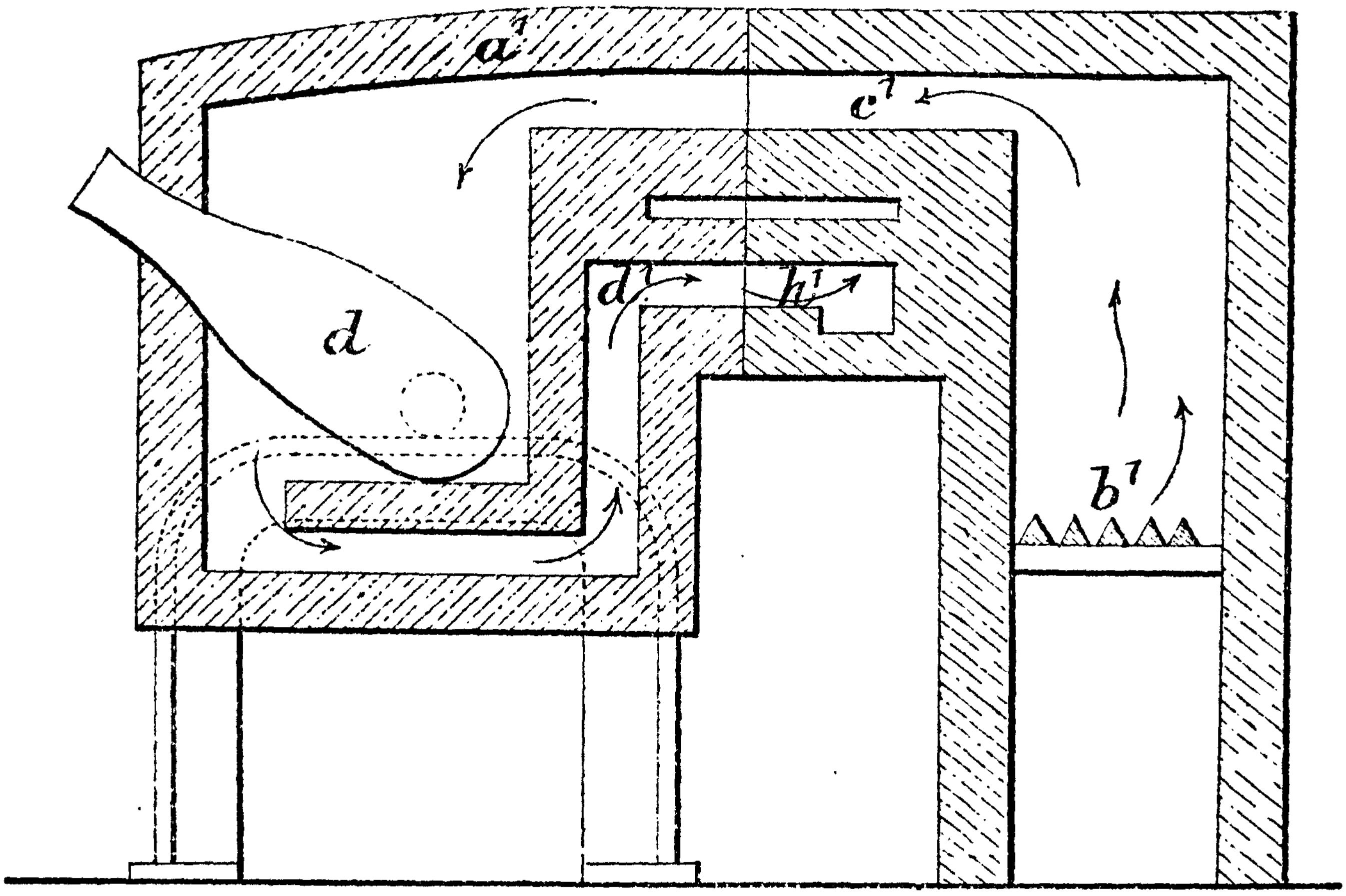

Fig. 146.—Balbach Process.—Vertical Section of a Modified Furnace.

charged and discharged without disturbing any portion of the furnace, and without the necessity of allowing the furnace to cool down after every discharge of the retort. The dross, having been introduced into the retort, can be readily heated to distil off the zinc, leaving the precious metals with a small quantity of lead in the retort.

This last-named operation may also be accomplished in a retort and furnace as shown in Fig. 143, where *a* represents the walls of the furnace, *b* the grate bars, and *c* a bridge or bearer made narrow, so that the coal may be packed at the sides of it, and also at the sides of the retort *d*, which is formed with a neck at one end, and supported by the bearer *c*. The front of the furnace is provided with an opening *e′* through which the neck of the retort projects, and this opening is sufficiently long to allow the retort to be turned down from the position shown in full lines to that shown in dotted lines.

When the retort is to be charged and heated, the opening *e′* is to be filled up by fire-bricks introduced beneath the neck of the retort *d*. When the heat rises to the required degree, the zinc contained in the retort is distilled off and received in any suitable chamber connected to the neck of the retort; and after the zinc has been distilled the space *e′* is opened, and the retort turned down to pour out the precious metals mixed with the remaining impurities in the concentrated form in which the process leaves them.

The fuel is to be supplied through a suitable opening over the retort, and the products of combustion may be taken from the same place to a chimney. Two of these retorts may be inserted side by side in the same fire using one and the same chimney. In practice, however, the furnace supported by gudgeons as shown in Fig. 144 is preferred, since in this case the operation of removing bricks from the neck of the retort and re-inserting them under it can be dispensed with.

The Improved Faber du Faur Tilting Furnace.—This furnace, which is shown in Figs. 147, 148, and 149, is capable of holding a charge of 2,000 lbs. The retort, *b*, is made of fireclay, lined on the inside with graphite. It is 6 ft. 6 in. long on the outside, 5 ft. 10 in. long on the inside, and 7 in. high. It is placed on a cast-iron frame, *i*, protected by fire brick, and connects with a condenser *c*, 12 in. in diameter and 2 ft. 3 in. high on the inside, which is placed on wheels so as to be moved when the retort is to be tilted. The retort is moved mechanically from the fireplace end at *l*. The furnace may be adopted either for the use of fuel or with some slight alterations for the use of gas fire. In this case the grate is lowered about a foot, and provided with under and over blast from hot blast pipes arranged in the flue *d*. The top wind, to ignite the gases, would have to enter in jets arranged across the

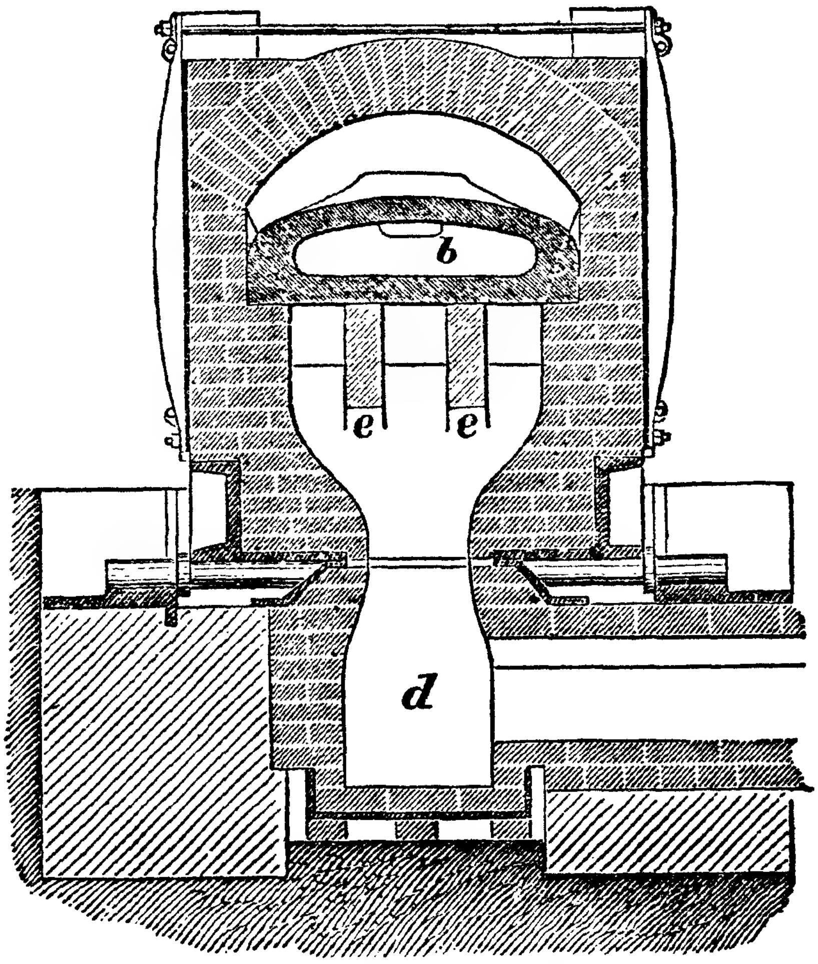

Fig. 147.

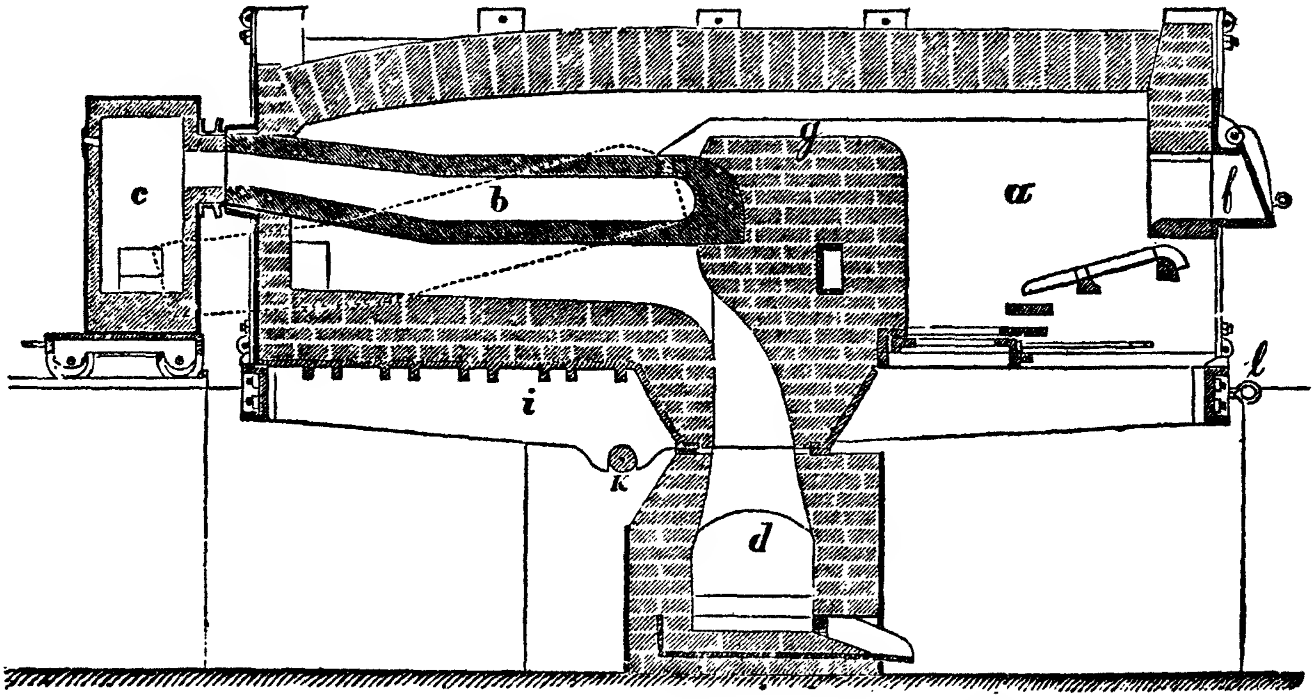

Fig. 148.

Faber du Faur's Tilting Retort Furnace.

inner edge of the fire bridge. *a* is the fireplace; *b*, retort, holding 2,000 pounds; *c*, condenser on small waggon; *d*, flue; *e*, support for retort; *f*, fire-doors; *g*, fire-bridge; *h*, gas escape, at one side and near bottom of condenser, with movable cover for cleaning condenser; *i*, iron beams, resting on shaft, *k*, on

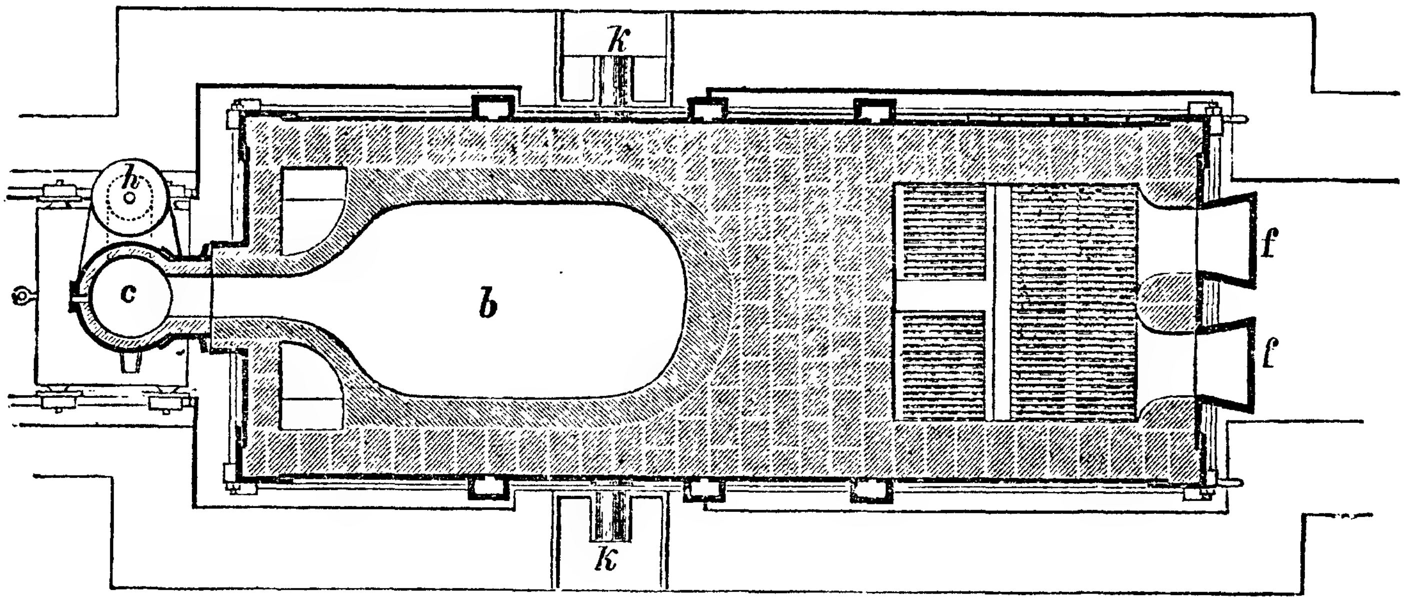

Fig. 149.—Faber du Faur's Tilting Retort Furnace.

which the whole furnace is tilted by means of a chain, at *l*, running over a sheave above, or by means of a screw and screw wheel sector attached to furnace.

The Brodie Zinc Distillation Furnace.—One of the earliest zinc distillation furnaces used was invented by Mr. Brodie. It consists of a large chamber, in which six retorts are placed in two levels, the upper row lying over the spaces between the lower ones, and in the position shown in Fig. 150, where *a a a* represent the upper retorts and *b b b* the lower ones. Fire-brick arches or protectors, *b*, keep the flame from striking directly against the retorts, as shown in Fig. 151. These are heated by a fireplace, 2 ft. 10 in. long and 15 in. wide, with cast-iron grate bars *c*, which is blown by a forced blast which enters the ash-pit *d* through the blast-pipes *f*, after having been heated in two hot-air pipes which are placed in compartments above and behind the furnace. The heat escapes by the flues above the retort chamber, passes into the chamber above, down at the back, and out of the furnace by an underground flue.

The retorts are tapped, when ready for discharge, by means of ¼-inch holes bored in the lower edge of the bottom, the rich lead being conducted into moulds through black lead gutters.

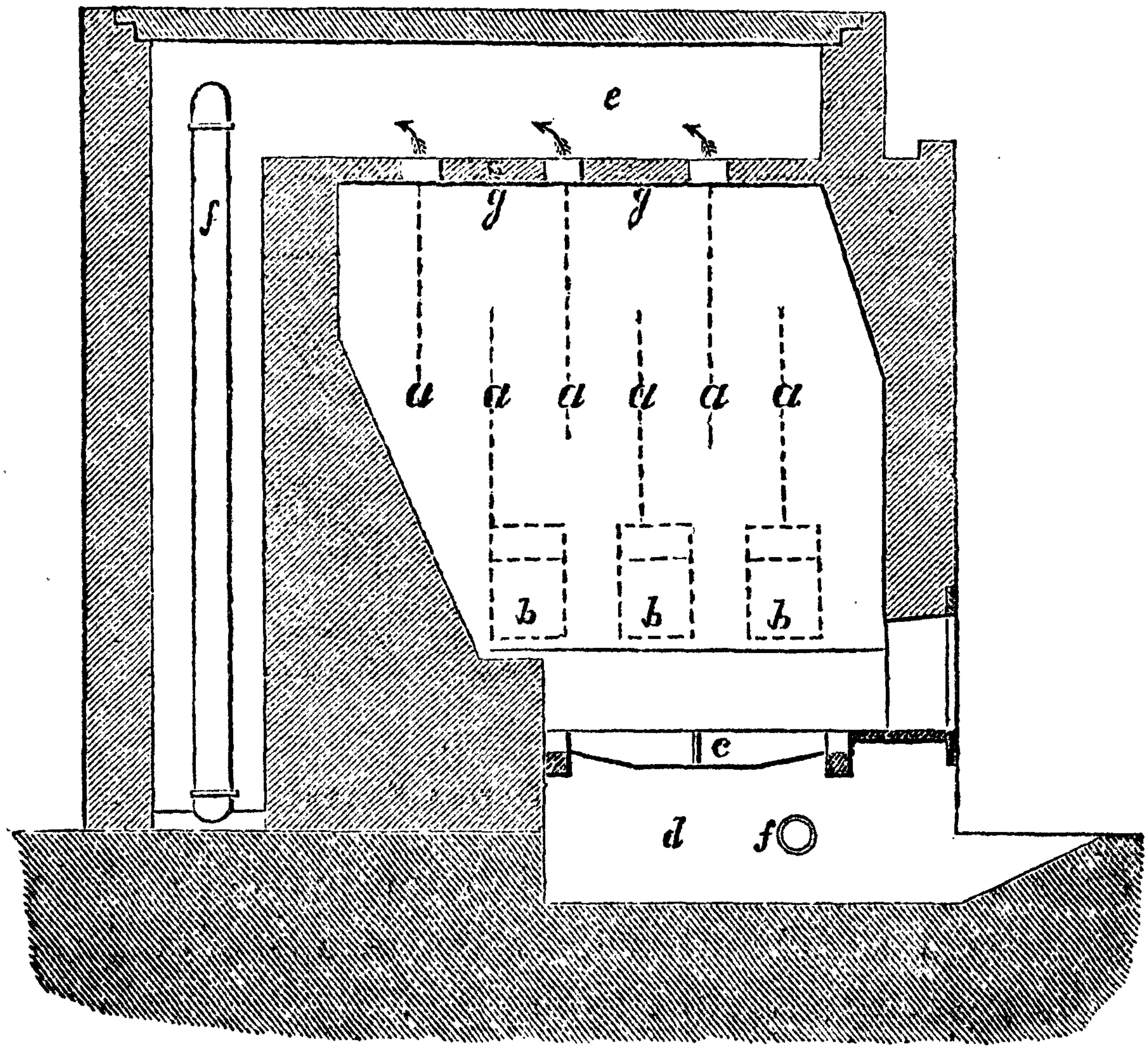

FIG. 150.

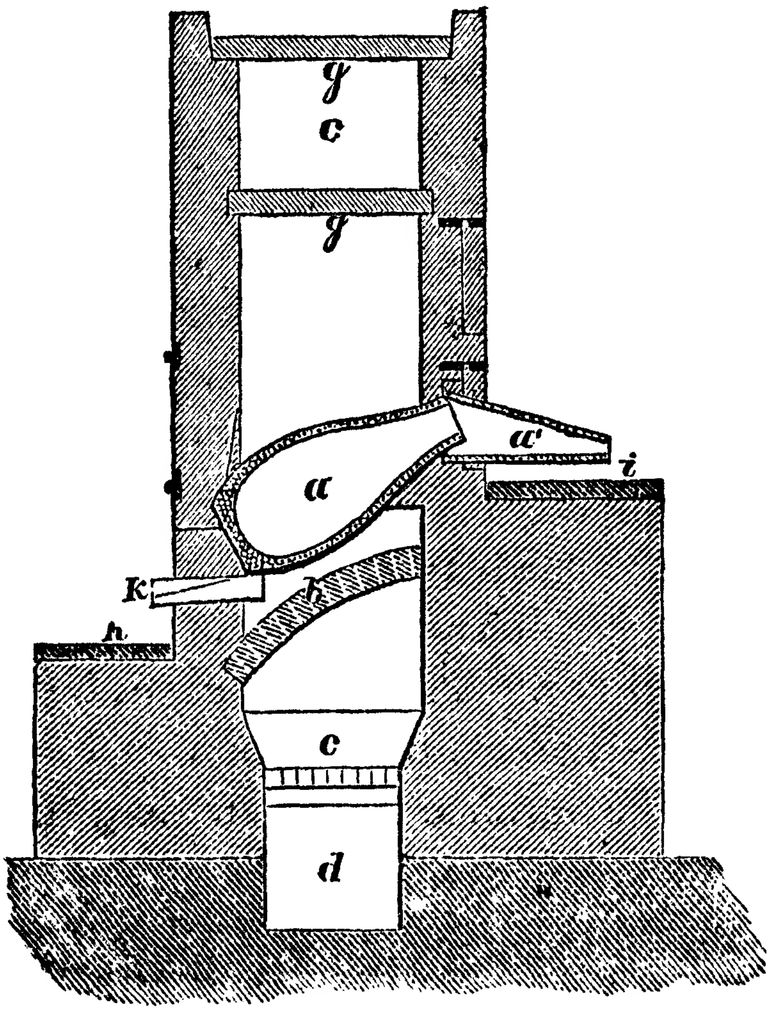

FIG. 151.

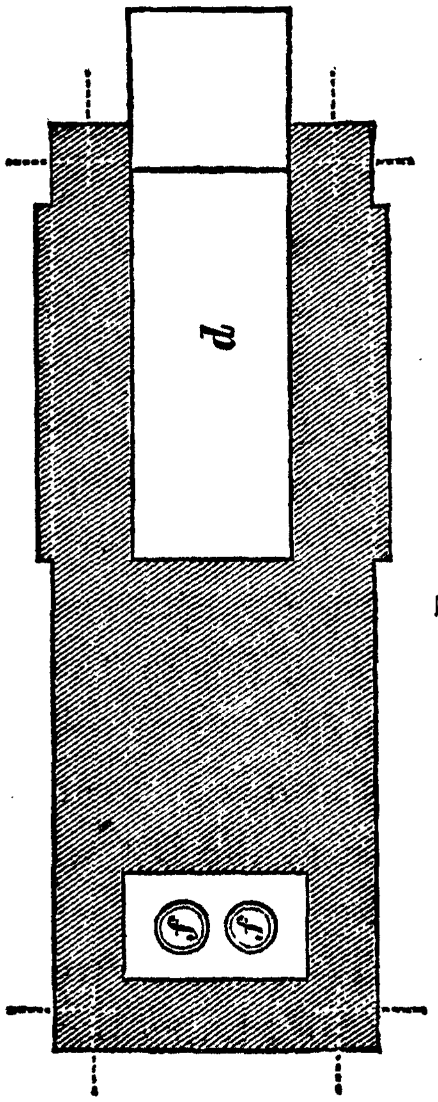

FIG. 152.

THE BRODIE ZINC DISTILLATION FURNACE.

The tapping takes place at the spout *k*, and the moulds are placed on the tapping bench *h*. Each retort has a condenser *a'*, attached to it, and in front of it a charging table *i*, covered with a cast-iron plate.

The six retorts hold 2,600 to 3,000 pounds of zinc-crust, according to the degree of liquation it has been subjected to. The time required for one operation in this furnace is from twelve to twenty hours, according to the material operated upon. One man does the work of the six retorts. The amount of fuel required is one ton of coal for one ton of alloy. Clean scum leaves, after tapping, scarcely any residue but charcoal in the retorts.

Separation of Zinc from the Lead.—The *modus operandi* as practised at the Balbach works is as follows:—The retort-furnace is heated gradually by means of coke until the retort has become dark red. Then it is charged by means of a small copper shovel with liquated zinc crust, which has previously been subjected to what is incorrectly called *granulation—i.e.*, after having been taken from the liquation it is spread, still soft, on a clean iron plate in front of it, and here cut up, by means of a shovel, into pieces of about 1 to 1½ cubic inches. According to the richness of the alloy and the size of the retort, a charge filling the retort to the neck consists of from 250 to 400 lbs. of alloy, with which from 3 to 5 lbs. of small charcoal, of bean to nut size, have been mixed.

The condenser is next put on. This may either be made for the purpose, being in that case simply a truncated cone of fire-clay, about 2 ft. long and of an inside diameter at the base a little larger than the outside diameter of the retort; or it may be an old retort, which it is unsafe to expose to the white heat required for distillation, and which is thus made to do duty for a while longer. The temperature is then at once raised to white heat, and kept so until the distillation is complete.

The operation lasts from eight to ten hours, according to the percentage of zinc in the alloy. During all this time it is only necessary to keep the retort uniformly at a white heat. If this is neglected, a crust of chilled alloy is apt to form on top of the metal bath, which, upon a renewed raising of the temperature, would cause an explosion in consequence of zinc fumes suddenly developed under the crust. An occasional introduction of a small iron rod into the retort through the condenser serves to show the workman whether he has kept the temperature high enough. Experienced men never make a mistake in this respect.

The metallic zinc, collecting in the condenser, and retained there by a rim of blue powder and oxide of zinc, forming around the mouth, is from time to time tapped, and the blue powder and oxide are quickly scraped into iron vessels, from which the air can be excluded, the object being to prevent the oxidation of the blue powder. When sufficient metallic zinc has thus been collected, it is re-melted in a kettle under a coal covering, the oxide and impurities are taken off, and the metal is cast into plates, which are again used for desilverisation. From 40 to 50 per cent., and sometimes more, of the zinc originally added to the work-lead is thus regained in the form of plates, which contain only a trace of silver. The blue powder and oxide, containing no more silver than the metal, and comprising about 10 to 20 per cent. of the original zinc, are sold to zinc works. Thus, about 50 to 70 per cent. of the original zinc is obtained again, the remainder having been partly retained by the desilverised lead, the contents of which in all cases amount to the somewhat constant figure of 0·7 to 0·8 per cent. of zinc to the whole mass of lead, and partly lost as oxide escaping from the mouth of the condenser.

When, in spite of a continued white heat, the zinc vapours are developed only very sparingly, the process is carried as far as policy permits, the rich lead containing then still a trace of zinc. At the same time it is desired that the zinc contents of the rich lead should not be more than a trace, in order that serious losses from this cause may be avoided in the subsequent cupellation. The condenser is then taken off, so that the zinc fumes still in the retort may more readily escape, and the furnace is left to itself for a few minutes. Meanwhile a small two-wheeled waggon, carrying a cast-iron pot lined with moulder's sand of the iron-casting houses, is brought in front of the retort, and by tilting the whole furnace the rich lead is transferred in a stream to the kettle. After having here cooled a while, the metal is poured into lead moulds, previously washed inside with lime milk, and well warmed. These moulds are only half filled, in order to produce thin bars, which are handier afterwards for gradual addition on the English cupelling hearth.

The residue remaining in the retort after the discharge of the rich lead, and consisting of a little charcoal and slag, is scraped out with an iron hook, while the retort is yet tilted. The larger pieces of coal go back into the retort in the next distillation. The smaller stuff and slag is kept separate, and is afterwards added in the smelting during which the rich litharge is reduced, or sometimes it is immersed in poor lead. The entire quantity produced during any one distillation should, after sifting out the large coal, not weigh over a pound or two. If no dust or dirt has been allowed to get into the alloy before distillation, and if the temperature has been kept high enough during that process, including the discharge of the retort, the remaining scraps will always be found insignificant. A handful of fine charcoal dust is now thrown into the discharged retort, the object being to prevent the oxidation of small lead globules, because litharge once formed would soon destroy the retort. Next, the furnace is turned back to its original position, the grate is cleaned, accretions of melted ashes which may have formed on the sides are broken off, there is new coke added, and the retort is at once filled with a new charge.

A retort will outlast from fifteen to thirty—or an average of about twenty—distillations, the retorts becoming unserviceable principally on account of accretions on the outside, which are melted coke ashes. To obviate this, firing with crude petroleum and flame fire from gas generators have been proposed. Both ways are, no doubt, practicable, and the latter especially will result in a large saving of fuel.

Refining Silver-Lead at the Chicago Works.—The subjoined account of these operations is taken from Professor Raymond's official report*:—

"*Lead Softening.*—As the silver-lead, or bullion as it is generally called, from the reverberatory furnaces is very hard, containing always a large percentage of antimony and other impurities, it is first put through lead-softening or refining furnaces, before being treated with zinc for the extraction of silver.

"The furnaces are small reverberatories, having working doors on one side and a tap hole connected with an opening in the pan, below which there is an iron pot sunk into the floor of the building, large enough to hold the charge of lead which the furnace is able to put through at one time. This pot is over a fireplace, and the lead can thus be kept in a molten state as long as is required.†

"After the requisite number of bars of lead have been placed upon the hearth of the furnace by means of the charging iron, the furnace-door is closed, and the charge slowly melted down. As soon as any dross forms on the surface of the bath, it is removed from the furnace with an iron rabble. The workmen are very apt to pull out a large amount of lead in removing the dross by means of this very heavy implement, and if a piece of green wood were used, fastened on cross-wise to a long iron rod, instead of the rabble, much less lead would be taken out with the dross. When the lead has become softened to the degree intended, the furnace-man fires up for about fifteen minutes quite energetically; the furnace is then tapped, and the lead flows out into the iron pot below. The surface of the lead is then skimmed clear of any oxides that may have formed there, and it is then dipped out into moulds. The dross produced is sent back to the reverberatory furnaces for reduction.

"*First Liquation and mixing with Zinc.*—The zinc furnace is nothing more or less than a liquation furnace, used for liquat-

---

* On "The Mineral Resources of the United States."

† The furnace is similar to the one I have described on page 243.—M.E.

ing the bullion, in order to free it from such impurities as may not have been eliminated in its passage through the lead softening furnace, previous to its being mixed with zinc for the purpose of desilverisation.

"The hearth of this furnace is formed by two iron plates, so placed together that they form a trough, and the trough so formed has a slight inclination from the fire bridge toward the tap hole in the front part of the furnace. Immediately in front of the tap hole there is a short spout of cast iron, from which the lead slowly runs down into a cast-iron pot sunk into the floor. This iron pot is provided with a fireplace, in order to keep the lead in a fluid state. While the furnace is putting a charge through, a small fire is kept up by a few coals on the tap hole spout, so that the lead will not congeal there. About 20 pigs of bullion compose a charge, and it requires between three and four hours to run a charge properly through. The higher the temperature in the furnace the quicker the charge is run through, of course, but then the liquated bullion is impurer than when run through more slowly. As lead fuses at 334° C., the temperature in the furnace should be kept as near this point as possible, in order to melt out the lead only and leave its impurities on the hearth in the form of dross. The fire, therefore, that is kept up, is a very low one, and the fire door is generally left open. The lead trickles slowly down the hearth towards the tap hole, and from there runs into the heated pot below. The dross left on the hearth is removed when no more lead melts out from it, and is sent back to the reverberatory furnace for reduction. The argentiferous lead now in the pot is mixed with about 3 to 4 per cent. zinc, and stirred continually with a perforated ladle for about 40 minutes, when it is dipped out into iron moulds, and sent to the separating furnace.

"*Second Liquation and Separation.*—The second liquation or so-called separation furnace is similar to the zinc furnace in its construction, with the exception that the hearth of the separating furnace has not as great an incline from the fire bridge toward the tap hole as that of the zinc furnace. On the floor, immediately in front of the charging door, there is an iron plate upon which the argentiferous zinc dross is stirred about with a shovel after coming out of the furnace, in order to somewhat decrease the size of the larger lumps before entering the zinc distillation retorts. The manipulation of running the argentiferous lead mixed with zinc through this furnace is about the same as with the zinc furnace, with the exception that it must be done with much more care, and, at the same time, more slowly, if a thorough separation of the silver from the lead is to be obtained.

"As lead fuses at 334° C. and zinc at 411° C., the utmost care must be given to the fire, so that the temperature in the furnace may be sufficient to melt out the lead only, and to leave the argentiferous zinc dross remaining on the hearth with as little lead as possible. The longer the process lasts, that is the more time consumed in liquating the lead, the less silver there will be found in the same, if, previous to its liquation, it has been properly mixed and thoroughly stirred with a sufficient amount of zinc. When the charge had been properly manipulated it often happened that not a trace of silver was left in the desilverised lead by cupelling one-third of an assay ton or 9·722 grammes. But, on the other hand, when poor zinc scrap had been used, instead of good slab zinc, the desilverised lead would sometimes assay as high as 18 ounces to the ton, even when the zinc had been well mixed with the lead and slowly liquated. The zinc scrap made use of for a short time was undoubtedly principally composed of iron.

"*Lead-Refining.*—Before following up the argentiferous zinc dross we will first finish with the desilverised lead, and then return to the former subject. After the desilverised lead has been ladled out of the pot belonging to the separating furnace into iron moulds, it is sent to the lead refining furnace for further treatment.

"The lead refining furnace is an ordinary reverberatory furnace with charging and fire doors on one side, and tap hole on the opposite. A charge consists of about 25 bars, the bars averaging about 100 pounds in weight. The principal impurity to be eliminated from the lead in its present state is zinc, if the other impurities, such as antimony, arsenic, copper, iron, &c., have already been well removed during the processes of lead softening and liquation, which took place previous to the bullion being mixed with zinc. The charge remains in the furnace between three and four hours, depending of course upon the quality of the lead.

"When the charge is finished, the lead is allowed to flow into a cast-iron pot that is provided with a fire place. Sawdust is strewn over the surface of the lead in the pot to prevent its oxidising. The lead is then ladled out into iron moulds having the impress of the company's name on the bottom. When two or three moulds have been filled the oxide formed on the surface of the lead is smoothly scraped off, in order to give the pigs a smooth and bright appearance. The metal having become cool it is dumped out of the moulds, piled up, and is then ready for shipment.

"*Zinc Distillation in Retorts.*—We will now return to the subject of the extraction of the silver from the argentiferous dross. This dross is principally composed of zinc, lead, and silver, and sometimes contains a considerable amount of antimony, if the bullion contains a large amount of that metal which has not been thoroughly eliminated during the process of lead softening and liquation. When the argentiferous zinc dross contains a large percentage of antimony the process of distillation is much retarded and the retorts become worthless in a much shorter time than when the dross is free from that metal.

"The retorts are made of fire-clay, and are placed in an inclined position within the tilting retort furnace invented by Mr. Faber du Faur. The furnace is held together by means of cast-iron buck-staves and wrought-iron rods. The general shape of the wind furnace is that of a hollow cube. The bottom is of wrought-iron bars, which constitute the fire-grate; the top is arched over, but in the centre of the arch there is left a square hole, which serves as the charging hole for fuel. There is also an aperture in the front side through which the neck of the retort slightly projects. The space left between the neck of the retort and the sides of this aperture is tightly stuffed with fire-clay. On the rear side, almost two-thirds of the way up from the bottom, there is a small square hole connecting with a short horizontal flue, that passes into an aperture in the lower part of the chimney. At the works at South Lynne there are three of these retort wind furnaces situated around the same chimney. They are all invertible by means of a simple piece of mechanism, consisting of the axle of the wind furnace, supported on cast-iron feet, and of a small cog-wheel attached to one end of the axle, into which plays a worm, which, on being turned by means of a hand wheel, revolves the furnace on its axle. By this means the retort and furnace can be turned nearly upside down, and emptying the retort of its contents. Coke is the fuel used. When the retort furnace is filled up to the top with burning coke, the retort is completely surrounded on all sides with live coals. The temperature existing within the retort must be very high, as it is that of a white heat, and it is sufficiently high to volatilise silver, especially as it will be more disposed to volatilise in conjunction with the distilling zinc. Some silver is also undoubtedly carried off mechanically with the zinc as it distils over.

"The argentiferous zinc dross, after being mixed with small pieces of charcoal, is put into the retorts with a scoop, as soon as the retort has become sufficiently heated. The retorts are filled full up to the neck, and as the distillation progresses more charcoal is added to the contents of the retort from time to time, as deemed necessary. As soon as the zinc begins to distil over (known by the white fumes of zinc oxide that escape from the mouth of the retort) a hollow conical shaped prolongation of fire-clay, called a nose, is placed before the mouth of the retort, in order to condense as much metallic zinc as possible. As fast as zinc condenses in the nose, it is removed with a small iron rod, hooked at one end, by passing it into the orifice of the prolongation by the retort man. The zinc fumes (zinc oxide) issuing from the end of the nose pass off into the atmosphere through a sheet-iron pipe, that passes through the roof of the building into the open air. A very small quantity of oxide is saved, namely, that which accumulates on the inside of the sheet-iron pipe. About 50 per cent. of the zinc is regained as metallic zinc, through its condensation in the noses.

"The distillation is known to be progressing well when there can be seen at the end of the nose a small flame having the characteristic pale yellowish-green colour of zinc when it burns to oxide, and when accompanied with voluminous white clouds of zinc oxide. The flame is much brighter and larger when the distillation is taking place in a new retort, than in one which has been used for several times; the disengagement of zinc fumes is also more energetic.

"The retort man must give his almost constant attention to the nose of the retort and see to it that the passage is kept continually free, for if it should become stopped up with condensed zinc, there would be danger of an explosion. More attention is required to this point during the first part of the distillation than toward the latter, as it is then that the distillation is the most energetic. When the zinc flame is no more visible and zinc fumes are evolved in only small quantities, the nose is removed and the retort left to itself until scarcely any more fumes are perceptible issuing from the mouth of the same. When the process is finished, the furnace with its retort is so inclined as to allow the contents of the retort to flow out into a small iron pot, held and carried by two workmen. The rich argentiferous lead thus obtained is poured from the pot into iron moulds, making bars about 1½ feet long, 2 inches thick, and about 3 inches wide at the top, and which are so light that they can be placed upon the test of the cupellation furnace, without injuring it. This retort bullion assays between 2,000 and 3,000 ounces in silver per ton of 2,000 pounds, depending of course on the richness of the ore worked.

"After the retort has been emptied of its contents, and well scraped out, it is turned right side up again, and is ready, if in good condition, for another charge; if not, the grate bars must be taken out, the coke removed, and retort and furnace allowed to cool off, after which the old retort is taken out and a new one set in. After the furnace has become cool it takes but a short time to remove the old retort and replace it with one that is new. The retorts used at South Lynne were generally unfit for further use after having put through about nine or ten charges, they becoming after this so clogged on the interior with zinc oxide, and covered over on the outside with a thick crust of slag, formed from the ash of the coke, that it became difficult to heat them to that degree in which zinc freely volatilises. It is considered more economical, therefore, to do away with the retorts as soon as they become so worn that the process of distillation would be prolonged by their further use, and it is considered better to economise in time than in retorts.

"Below is given the number of the retort, date and time of charge entering same, number of the charge, number of pounds of dross composing same, number of bars produced, weight of same, and amount of metallic zinc regained by condensation. The amount of oxide saved is not given, it being a very small part of the whole evolved. What little quantity is saved is sold.

"RETORT NO. 1.

Date.	Time.	Number of Charge.	Dross, lbs. of.	Bars out.	Weight, lbs.	Zinc regained. lbs.
November 2, 1873	4 a.m.	5	299	36	203	34
„ 3, 1873	6 p.m.	6	319	36	195	58
„ 4, 1873	3 p.m.	7	320	36	179	59
„ 5, 1873	8 p.m.	8	245	31	141	38

"It will be perceived by the above statement that a charge consists of about 300 pounds dross, and remains in the retort—

Charge No. 5 for about thirty-eight hours.
„ „ 6 „ twenty-one „
„ „ 7 „ twenty-nine „

and the average time in these three cases would consequently be 29½ hours. The metallic zinc saved is used again for the desilverisation of the silver lead.

"In another silver smelting and refining works they make use of the old retorts in condensing the zinc in the following manner: The retort is cut in half, the lower half being luted on to the retort furnace immediately in front of the mouth of the retort. Through the bottom a small hole is knocked to allow the escape of the zinc fumes. Whether more zinc is brought to concentration in this manner than by the use of fire-clay noses is not known.

"*Cupellation.*—The cupellation furnace at the works at South Lynne is a small one, of the English pattern, having one tuyere supplied with blast by a No. 3 Sturtevant blower. The blower is run by a small steam engine that has a vertical tubular boiler. The furnace and engine are in a separate room, the floor of which, in front of the furnace, is covered with sheet iron, so that all pieces of silver that may happen to fall on the floor can easily be swept up. The English style of cupellation furnace is so generally well known that a description of the same will not be necessary.*

"The test is made of a blue limestone, brought from Newark, N.J. It is ground and sifted to the proper size, and then stamped into the iron test frame. The centre of the test is scooped out somewhat in the shape of a horse-shoe.

"At each cupellation about six to ten silver bricks are produced, weighing on an average about 500 ounces each, and averaging 995-thousandth fine, according to tests made at governmental assay office in New York city.

"The following assays show the amount of silver contained in the litharge at various stages of the cupellation, which in this case lasted for eighteen hours. The samples were carefully taken from the litharge every hour, as it ran off the test. These assays show that, as the cupellation nears its end, the greater is the amount of silver dissolved in the litharge, or, in other words, the smaller the proportion of lead to the silver

---

* See Figs. 129—131, pp. 235, 236.—M.E.

present on the test the richer the litharge will assay in silver. The assays also show that the amount of the silver contained in the litharge depends upon the skill with which the operation of cupellation is conducted, for if it were otherwise we should expect that the amount of silver in the litharge would gradually increase from the first assay up to the last, and, as will be perceived, this is in a manner so, but the increase is not gradual; for example, the sample taken in the second hour assays higher in silver than of that taken in the third hour. There are several other like cases, which will be found on inspection.

"ASSAYS OF SAMPLES OF LITHARGE TAKEN EVERY HOUR DURING CUPELLATION.

1st hour	9 ounces	= 0·03 per cent.
2nd „	18 „	
3rd „	9 „	
4th „	18 „	
5th „	18 „	
6th „	12 „	
7th „	15 „	
8th „	15 „	
9th „	19½ „	
10th „	21 „	
11th „	45 „	
12th „	19½ „	
13th „	39 „	
14th „	25½ „	
15th „	36 „	
16th „	49½ „	
17th „	88½ „	
18th „	144 „	= 0·5 per cent.

"The test bottom assays as high as 149 ounces per ton in silver. This of course, as well as the litharge, goes back to the reverberatory furnaces for further treatment.

"*Silver Refining.*—The silver bricks from the cupellation furnace are melted over again in graphite crucibles in the wind furnaces of the laboratory, with addition of a little quartz sand and borax, which gives the silver a brighter appearance and also frees it from any litharge that may be with it. It is then poured out into cast-iron moulds, stamped, and is then ready to be sent to the New York assay office.

"The silver, in accordance with the Balbach process, must go through seven different processes before it is ready for market, viz. :—(1) Smelting and reduction in reverberatory or shaft furnaces. (2) Softening of the silver-lead. (3) Liquation and mixing with zinc. (4) Second liquation in separating furnace. (5) Distillation of zinc in retorts. (6) Cupellation of rich argentiferous lead. (7) Refining of silver in crucibles."

Results obtained at the Pennsylvania Lead Co.'s Works at Pittsburgh.—Upon these results Professor Raymond reports as follows :—

"*First Campaign.*—Treating unrefined work lead, as it comes from the shaft furnace of the Company :—

To the kettle : impure work lead . .	87,294 lbs.	
Taken off: 'Schlicker' (cupreous oxide)	3,497 ,,	
Remains : pure work lead . . .	83,797 lbs.	with $6,305\frac{6}{10}$ oz. silver.
To this was added zinc . . .	1,760 ,,	= 2·1 per cent.
The zinc crust after liquation was .	9,525 ,,	
'Abstrich' from dezincation of poor lead	7,810 ,,	
Oxides and metallic lead from market kettle	1,000 ,,	
Lead from liquation of zinc crust . .	808 ,,	
Market lead	67,104 ,,	

"The liquated zinc crust was subjected to distillation in twenty-seven charges. Average charge, 353 pounds of alloy, with $\frac{3}{4}$ pound of small charcoal. In twenty-four hours two distillations were effected in each retort.

Charged.	Liquated zinc crust. . .	9,525 pounds.
	Charcoal	108 ,,
Result.	Rich lead	7,609 ,,
	Metallic scraps . . .	390 ,,
	Charcoal, with little metal .	not weighed.
	Metallic zinc	770 pounds.
	Blue powder and oxide . .	not weighed.

Coke used, 410·4 bushels, at 40 pounds = 1·7 pounds per pound of zinc crust.

"The metallic scraps were immersed in poor lead on the cupelling test, and then cupelling was continued in the usual way, by adding rich lead bars from time to time. By the immersion of the scraps in poor lead, 230 ounces of silver were extracted from them.

"Results—

"(1) *Control of Silver.*

In refined work lead		6,305·6 ozs.
Obtained and proved:		
Silver tapped from test, 6,098·75 ounces, at 980 fine	6,031·66 ozs.	
Small pieces of silver from test, 150 ounces at 970 fine	146·50 ,,	
Directly obtained silver	6,178·16 ,,	
Silver in market lead, 0·33 ounce per ton in 67,104 pounds	11·18 ,,	6,189·34 ozs.
This leaves in litharge, hearth, retort scraps, oxides, and scum from immersion, and liquation lead		116·26 ,,
		6,305·6 ,,

And the direct product of silver is 98·1 per cent.

"(2) *Control of Lead.*

Unrefined work lead		87,294 lbs.
Obtained and accounted for:		
"Schlicker," 3,497 pounds, at 80 per cent. .	2,797 lbs.	
Lead in zinc crust	7,765 ,,	
Soft market lead	67,104 ,,	
Oxide and scum from market kettle 1,000 pounds, at 95 per cent.	950 ,,	
Liquation lead.	808 ,,	
Oxides from dezincation, 7,810 pounds, at 80 per cent.	6,248 ,,	85,672 lbs.
Loss, about 1·9 per cent.		1,248 ,,

"*Second Campaign.*—Desilverisation of refined work lead.

To the kettle: lead	62,895 lbs. with silver, 6165·9 ozs.
Added: zinc	1,260 "
Produced: liquated zinc crust	6,362 "
'Abstrich' from dezincation of poor lead	3,500 lbs.
Oxides and metallic lead from market kettle	700 "
Market lead	53,420 "

"The liquated zinc crust was subjected to distillation in twenty charges. Charges and time required were the same as in the first campaign.

Charged.	Liquated zinc crust	6,362 pounds.
	Charcoal	80 "
Result.	Rich lead	5,221 "
	Metallic scraps, charcoal, zinc and oxides	not weighed.

Coke used, 276 bushels, at 40 pounds = 1·73 pounds per pound of crust.

"The residue in the retort after the discharge of the rich lead, *i.e.* metallic scraps and charcoal impregnated with metal, was not divided into two classes, as in the former case, but was all kept together, to be added in the reduction of the rich litharge at some future time. There was, therefore, no immersion in poor lead in this case, and, consequently, a smaller direct product of silver than in the previous campaign.

"(1) *Control of Silver.*

In refined work lead		6,165·9 ozs.
Obtained and proved:		
Silver tapped from test 5,714½ ounces at 989 fine	5,645·9 ozs.	
Small silver pieces from test, 115 ounces at 970 fine	111·5 "	
Directly obtained	5,757·4 "	
In litharge, 5,209 pounds, at 30 ounces per ton	78·0 "	
In market lead, 53,420 pounds, at 0·33 oz. per ton	8·9 "	
		5,844·3 ozs.
This leaves in hearth and retort scraps		321·6 "
		6,165·9 "

And the direct product of silver is 93·3 per cent.

"(2) *Control of Lead.*

Refined work lead		62,895 lbs.
Obtained and accounted for:		
Market lead	53,420 lbs.	
'Abstrich' from dezincation, 3,500 pounds, at 80 per cent.	2,800 ,,	
Oxide and metallic scum from market kettle, 700 pounds at 95 per cent.	665 ,,	
Lead in zinc crust	5,002 ,,	
		61,887 lbs.
Loss, 1·7 per cent.		1,008 ,,
		62,895 lbs."

The Giraud Process.—This is another patented method for separating silver from argentiferous lead, and purifying the lead.

The operation is commenced by extracting as completely as possible, by any of the ordinary methods, the antimony which may be contained in the lead; immediately afterwards the lead is placed in any suitable vessel (but by preference a melting pan or boiler is employed for this purpose), in which an opening has been adapted at the base in order to allow the fused metal to be run off as required. This melting pan or boiler may be set on an ordinary furnace, but by preference the furnace should be provided with a movable grate which will facilitate the instantaneous extinction or removal of the fire.

To facilitate the operation the boilers composing each range are placed in the following order:—First boiler containing the argentiferous lead freed from antimony; second boiler reserved for the rich litharge or dross; and third boiler for the extra rich skimmings of the litharge or dross. The operation may be carried out, however, in any number of boilers appropriately disposed for the purpose; for example, that part of the process which is described as applicable to the first boiler may be divided, and the lead may be run from one to another (as shown in the accompanying drawings); or the treatment described as to be effected in two or more of the boilers may be confined to one or two. The furnace of the first boiler is lit up and when the lead therein is reduced to a perfect state of fusion, the intensity of the fire is increased and then is added to the fused metal a sufficient quantity of zinc, the proportion varying according to the richness of the lead which will have been previously ascertained by assay. The zinc is immersed by means of an apparatus called a " mixer," consisting of a box or case divided in two or more parts. The case is also perforated, and is attached to a metallic spindle provided with radiating branches or paddles to promote the mixture of the zinc with the fused metal.

The spindle with the box attached containing the zinc is sunk in the molten metal, and supported at the top end by one or more riding bars set on the rim of the boiler or by any other method of vertical suspension; thereupon a revolving motion is communicated to it, and the zinc fusing and escaping from the box in small particles or streams passes through the mass of lead in agitation, and in a great measure arrives gradually at the surface, drawing with it a considerable part of the silver. When the mixture of the zinc with the lead is terminated, the mixer is withdrawn, and the fire suddenly extinguished or removed, but the operator continues to stir the molten metal for some time longer. It is then necessary to watch the metal and take advantage of the favourable moment for lightly and dexterously skimming the surface, taking care to remove as little as possible of the lead. The produce of this skimming—which is argentiferous dross or rich litharge—is thrown into the second boiler, to be there treated separately.

The fire of the first boiler is now rekindled for the purpose of remelting the metal therein contained, the mixer is introduced a second time charged with zinc, and the operation above described is repeated, until it is ascertained by assay that the silver has been entirely extracted. Commonly after two such operations a third will be needless, inasmuch as the precious metal will be altogether or almost entirely extracted.

The purification of the lead is now to be effected, so that it may be freed not only from the zinc but also from other foreign matters. For that purpose a brisk fire is rekindled under the boiler containing the metal to be purified, which is hermetically closed by the aid of a cap or cover which preferably should be somewhat convex, and securely fastened to the rim of the boiler. In the cover, two apertures should be contrived—one for the passage of a pipe for leading steam into the metal in fusion, and the other, a larger one, for the escape of the steam, which will carry with it a great quantity of oxide of zinc and other matters. To this second opening is adapted an external tube communicating with a condensing chamber or receptacle, and conveying thither the oxide of zinc and other matters carried off. This chamber should be divided into several compartments, and conveniently ventilated. The steam-pipe is sunk in the molten metal to such a depth that the steam may spread throughout the whole mass. If the boiler be very large, and one jet of steam insufficient to reach the zinc in every part, the principal pipe may be fitted with several auxiliary pipes, which will permit the steam to penetrate quite through the molten lead ; the higher the temperature of the steam, the more prompt and efficacious will be its effect. It will be prudent to adapt to the steam-pipe externally two taps, one for regulating the admission of steam into the metal, the other when opened to let off any water collected in the pipe, which will prevent any spattering of the fused metal. When the steam shall have been introduced into the molten lead it will be desirable to ascertain when the oxidation is completely terminated; and to that end a valve, tap, or other suitable contrivance, with proper appliances, is fitted to the escape tube to allow the operator to test whether the steam passes in its natural state clear of oxides or other matter. Its function being thus terminated, the steam is then suppressed; the cover with its appliances is removed, and all the oxides and other matter which float on the surface are skimmed off very lightly, carefully avoiding the metal as much as possible.

The lead being now sufficiently purified, it is poured in the usual way, or run out into moulds in the shape of pigs or ingots. If the latter, the conduit by which the lead is run off should be treated by an appliance in the nature of a chafing dish or brazier for the purpose of preventing premature cooling.

When by the preceding operations several times repeated a sufficient quantity of rich litharge is obtained to fill the second boiler, the treatment proceeds as follows:—These skimmings should be reduced to fusion with a view to oxidisation and removal of the zinc and other foreign matters. This having been effected, the metal remaining may if desired be refined by cupellation immediately afterwards, as it will be found to contain considerably less lead than after the usual Pattinson process, but (according to the inventor, M. Giraud) it is preferable to subject it to further treatment. The furnace is lit up under the second boiler containing the litharge, and when the

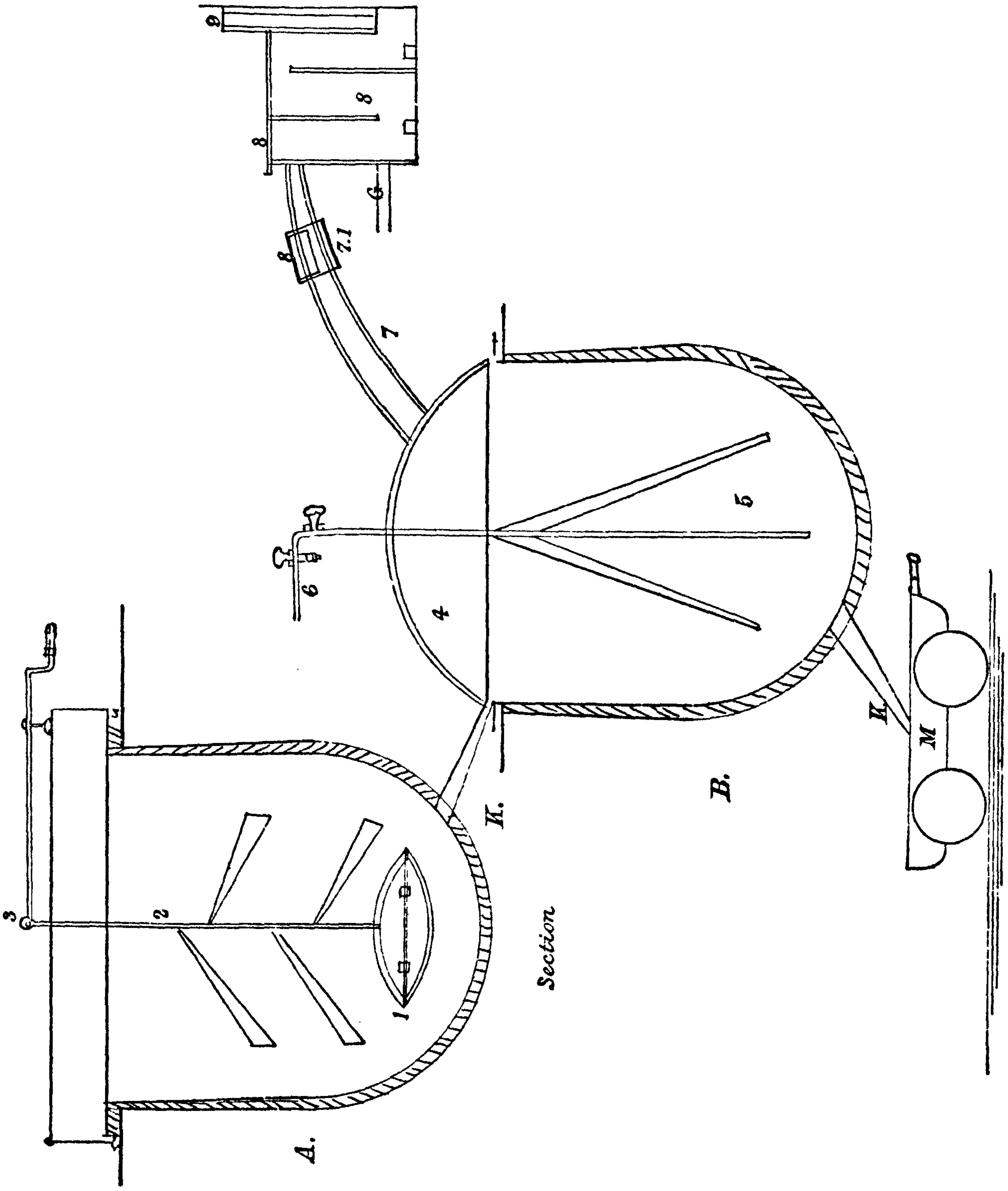

FIG. 153.—GIRAUD'S MELTING KETTLES.

contents are in perfect fusion a mixer is introduced. This form of mixer has no box, but it is provided with radiating vanes or paddles suspended and worked in the same manner as the mixer above described, the object in using it being to amalgamate the lead, silver, and zinc which compose the contents of the boiler. The fire is then extinguished, and the operator skims as long as possible all that coagulates on the surface, carefully casting into the third boiler this new "extra rich" litharge. If the dross that remains in the second boiler still contains a certain quantity of silver it is brought again to a state of fusion, and stirred until complete mixture is effected with a mixer having a perforated box attached, with a small quantity of zinc proportioned to the requirement. The furnace is then drawn, and a skimming of the coagulated surface taken to the third boiler.

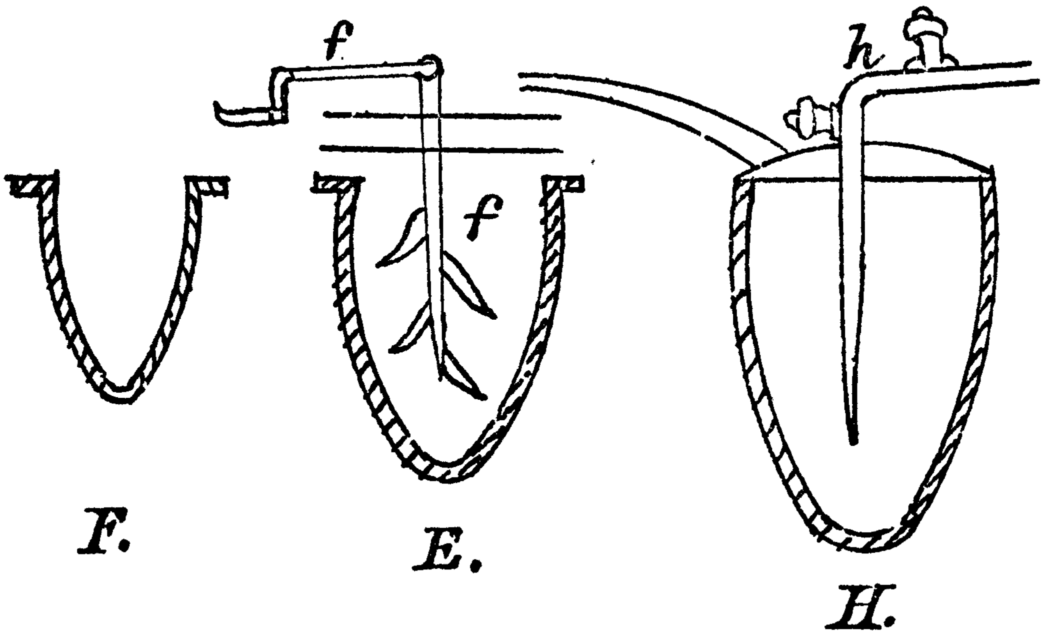

FIG. 154.—MELTING POTS.

If the metal, or rather the litharge or dross, remaining in the second boiler contain still a quantity of silver nearly equal to that of the primitive silver lead, more or less, it may be mixed with other metal prepared to undergo treatment in the first boiler. If, however, it prove much richer than the primitive silver-lead, it is better to remelt it in the second boiler and repeat the last preceding operation with a "mixer" and box for the addition of the adequate proportion of zinc. Often after the last operation the lead remaining in this second boiler contains a very small and insignificant portion of silver—so small, in fact, that it may be disregarded. Then the contents of this boiler are re-heated to fusion with a brisk fire; the lead is purified by the aid of one or more jets of steam, and cleared of oxide and skimmed; and the remaining metal is subsequently poured or run into moulds.

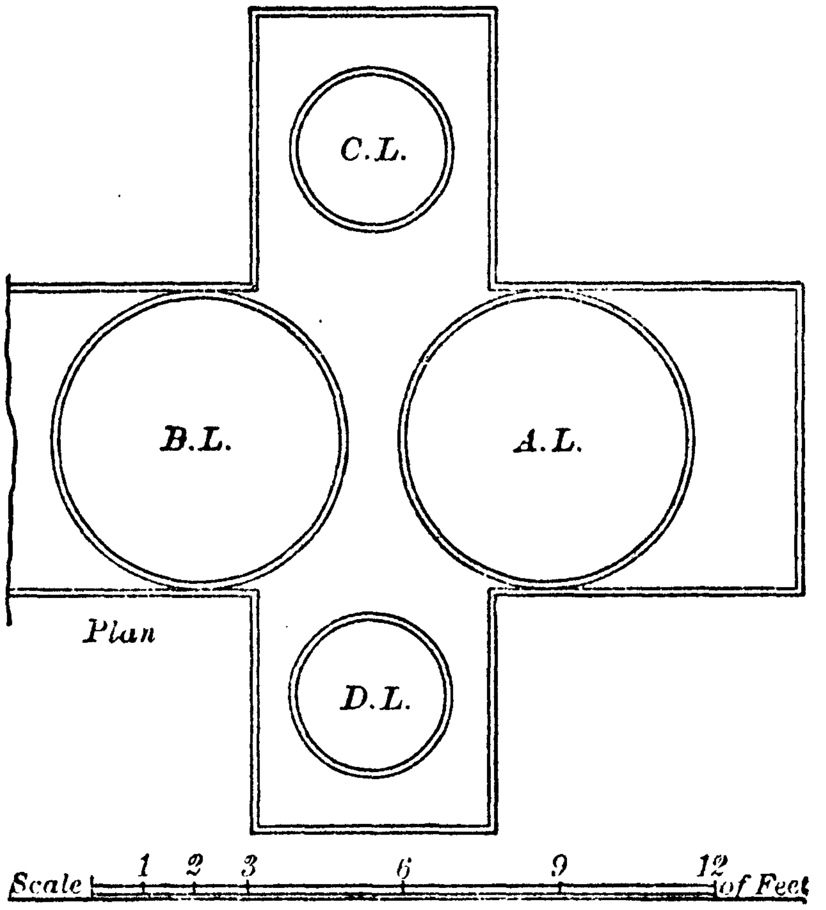

FIG. 155.—PLAN OF BOILERS.

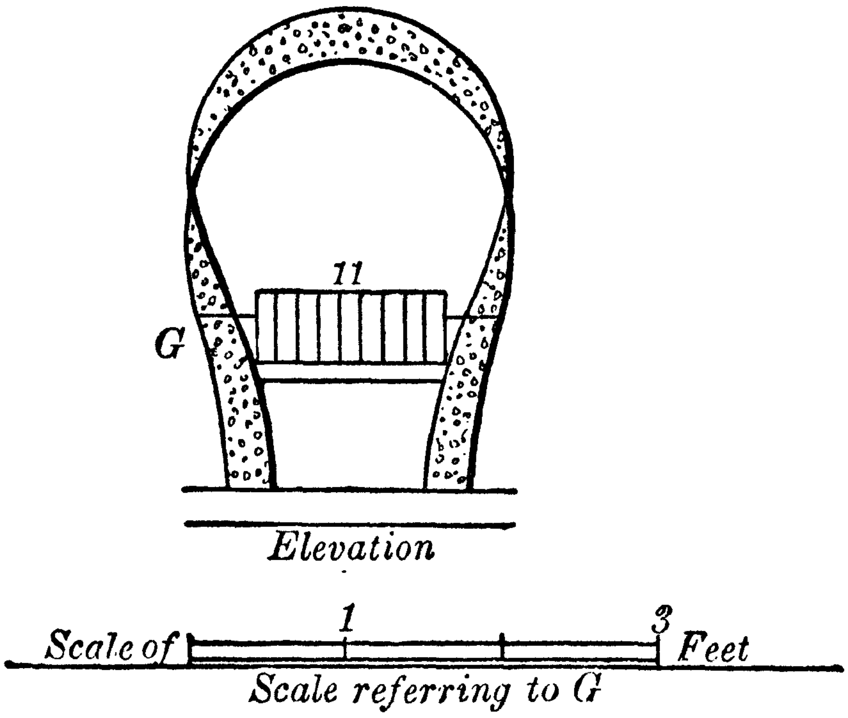

FIG. 156.—FURNACE WITH MOVABLE GRATE.

As to the extra rich litharge in the third boiler, when a sufficient quantity is collected it is reduced to a perfect state of fusion, and by the application of steam, as already described, is freed from the zinc and other foreign matters. Immediately after this operation the product is ready for the cupel furnace, if desired. In order, however, to complete the extraction of the silver so as to obtain it in a state of sufficient purity, the treatment applicable to the extra rich litharge is repeated in one or more melting pots, having by preference somewhat the form of a crucible: a range of three pots is shown in Fig. 154. To these melting pots are adapted the proper appliances for mixing, steaming, and separation. By those means the zinc which remains in affinity with the silver will be expelled, and the comparatively small residue of lead and other alloys that may remain in combination with the precious metal will be dissipated or separated from it, thereby dispensing with the usual process of cupellation or treatment by acid.

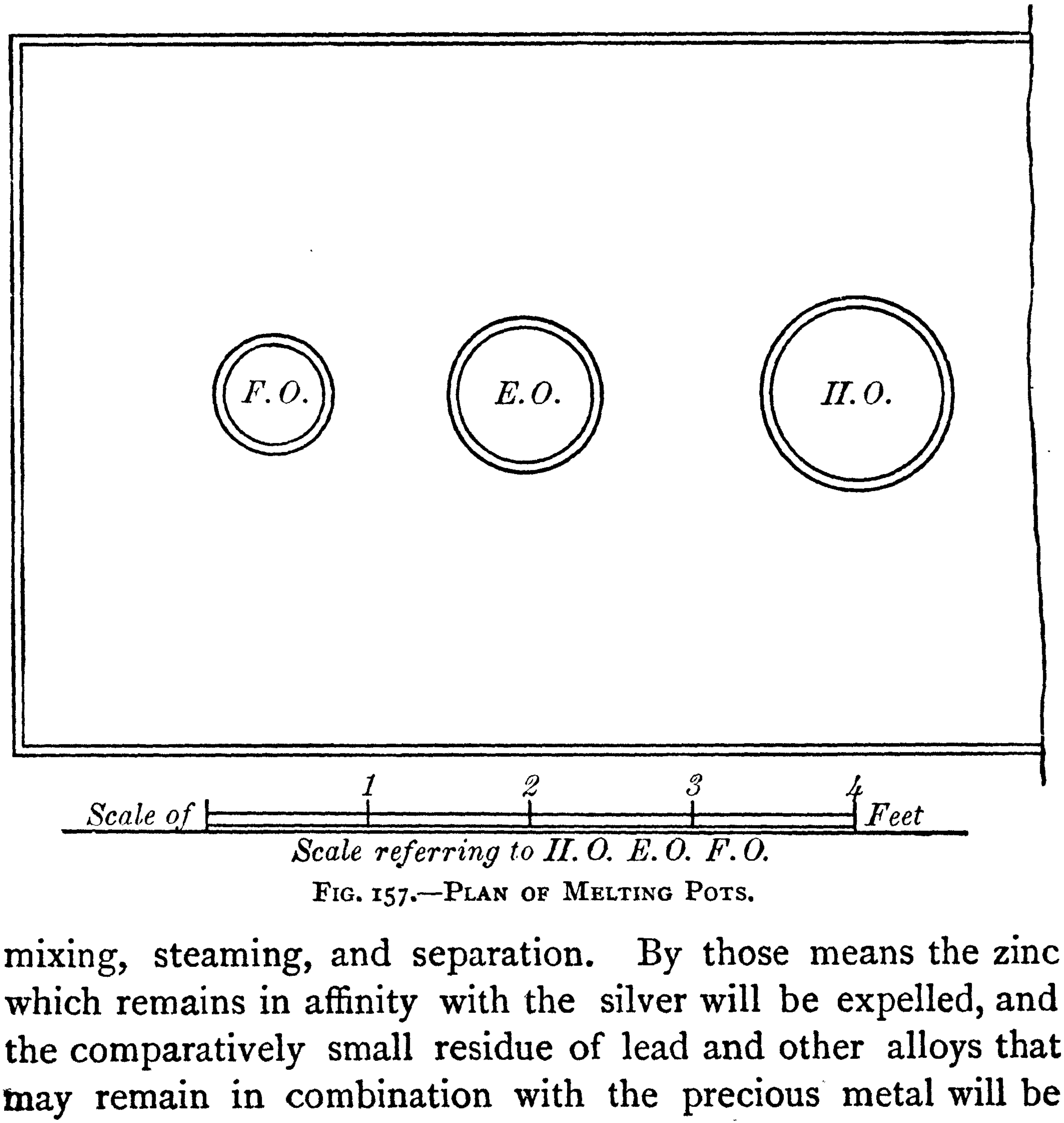

FIG. 157.—PLAN OF MELTING POTS.

Explanations of the illustrations just given—Figs. 153, 154, 155, 156, and 157—are here appended:—

A and B are two boilers shown in section, in which the operation described above as effected in the first boiler is shown as divided, the application of zinc taking place in A, and the steaming and running into moulds in and from B, 1 is the perforated box attached to a spindle with vanes marked 2, turned by a crank handle marked 3. The cover for steaming is marked 4. The steam-pipe, with the three branches and taps, are marked 5 and 6 respectively. 7 is the escape pipe or conduit for the eduction of steam, and 7′ shows an arrangement of valve in the escape pipe for observing the progress and completion of oxidation. G shows an arrangement of condensing chamber with partitions or screens marked 8, having a ventilating tube 9.

H E F show a range of small melting pots or crucibles for the treatment of the products ordinarily dealt with by cupellation or by acids for refining the silver, in which *h* designates a steam pipe with taps, and *f* a mixer.

A L, B L, C L, D L, Fig. 155, H O, E O, F O, Fig. 157, show the arrangement in plan of an entire set of boilers and melting pots respectively constituting the ranges hereinbefore described. G, an end view, Fig. 156 shows a furnace and door with a movable grate marked 11. M is a mould of the ordinary kind into which the purified lead may be run from the boiler B Fig. 153.

Koch's Desilverising Apparatus.—At Clausthal an ingenious apparatus, arranged by Ernest Koch, was tried in 1873. It was described by the inventor in a communication to the *Berg und Hüttenmännische Zeitung*, from which an account of the conditions required for the economical working of the process may be quoted :—

"(1.) *Separation of Copper by Liquation.*—The original lead is first liquated in a furnace, which in construction is similar to an ordinary reverberatory.

"The fireplace, as shown in Figs. 158 and 159, is at C. The products of combustion pass from *b* to *a*, and escape to the chimney; the floor of the furnace slopes from *a* to *d*, so that *a* is the highest and *d* its lowest part; the molten lead flows into the pot, B; the residue is moved by means of a paddle from *a* towards *b*, where the highest temperature prevails, thoroughly liquated by stirring, and finally raked out. The furnace is kept in continuous working.

"As fast as lead runs into the pot, fresh pigs are thrown in, and the more infusible residue removed, the heat being so regulated that the gases only escape at a temperature below the melting point of lead. The length of the furnace, or the distance between *a* and *b*, must be arranged for certain dimensions of the fireplace in order to obtain this result. The liquated residue will contain the chief proportion of the copper originally present in the lead. The melting points of copper and lead differ considerably, so that the more carefully the liquation is carried out the more complete is the separation of these two metals.

FIG. 158.

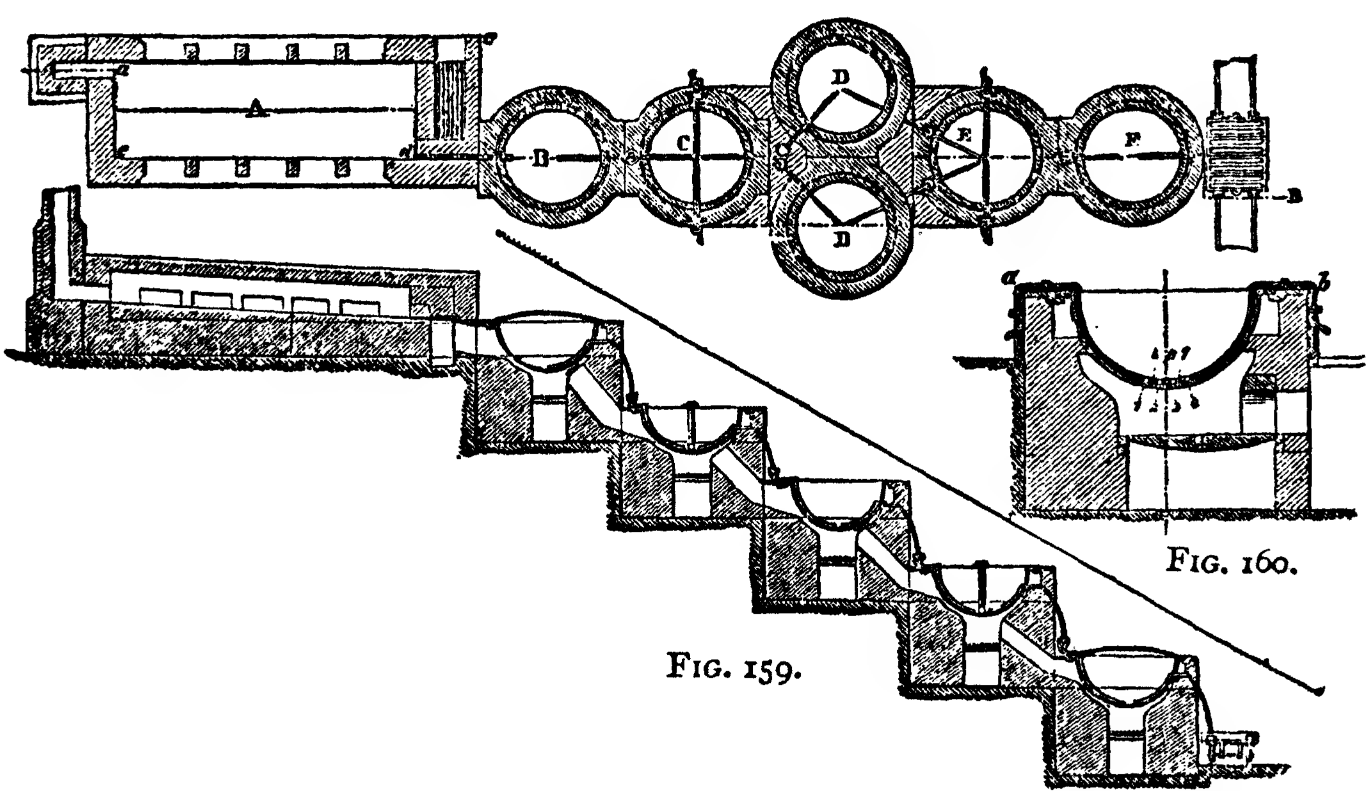

FIG. 159.

FIG. 160.

KOCH'S DESILVERISING APPARATUS.

"The pot, B, serves for the collection of the needful quantity of lead for further treatment. After filling it is tapped into the pot C, except a small quantity, which is left as a reserve in case of irregular working of the liquation furnace charges, as well as to provide a covering of oxide for the lead flowing into it from the furnace. As a protection from cooling this pot is provided with an iron cover.

"(2.) *Removal of Antimony.*—After the lead in the pot C has reached red heat, steam is passed through the charge, and the crusts of oxide (*Abstrich*) removed. The oxide of antimony strongly corrodes the iron vessel, so that in time it becomes eaten through; and this pot should be cast with a thicker rim. Oxidation of the antimony is much promoted by exposing a large surface to the action of the air by frequent stirring, and by a shallow form of pot. Antimony hinders the formation of the zinc-silver alloy, keeping the latter metal in the fluid portion when much antimony is in the lead; it is therefore essential to remove it before adding zinc.

"If it is removed before the desilverising operation, all the silver is obtained in one product; but if the antimony is not removed until the lead is desilverised, a part of it goes with the zinc-silver alloy, and thence into the rich lead, and thus returns to be worked over and over again. The dross removed before desilverisation contains some lead mechanically mixed up with it. It is stamped to a fine powder, whereby the lead shots are flattened and most recovered by passing through a sieve.

"(3.) *Desilverising.*—The lead deprived of antimony is now tapped into the desilverising pots, D D, by means of a syphon, having one leg a foot longer than the other, which delivers the metal into a funnel attached to the side of the pot below, and is the upper part of a wrought-iron pipe terminating at the bottom of the pot. The funnel is filled with coke, and the lead flows into it from the upper vessel, and thence to the lower pot, without suffering oxidation. During this operation the appropriate quantity of zinc is placed at the bottom of the pot, in front of the opening of the iron pipe, so that the zinc is immediately brought into contact with the silver contained in the lead.

"The charge is now stirred, and the zinc alloy skimmed off in the usual way. As this operation is repeated three times, it is necessary to have two desilverising pots, in order that a continuous working of the apparatus may go on. Upon mixing the lead and zinc two distinct alloys are formed—silver-zinc alloy and lead-zinc alloy. These are separated, not so much in consequence of their different specific gravity, as by the difference of their melting points. The silver-zinc alloy solidifies first in the process of cooling, and afterwards as the temperature falls the lead-zinc alloy crystallises out.

"The formation of the first alloy may be promoted by exposing a larger surface for cooling, either by gentle stirring by hand or by a current of steam; in the latter case the silver-zinc crystals are readily detached from the sides of the pot, and brought to the surface in the form of a pasty scum. As the formation of a rich silver alloy and a poor lead alloy require opposite conditions, the former being promoted by a minimum of zinc, the latter by an excess, the following operations can be divided accordingly into the production of a rich zinc-silver alloy and a poor zinc-lead alloy.

"The rich zinc-silver alloy is formed by making use of the alloy produced by the third addition of zinc to the former charge to the new charge of lead, and is effected by placing it at the mouth of the pipe through which the hot lead, free from antimony, is flowing into the pot. The thorough mixing is accomplished by steam, and the first zinc alloy taken off is now rich enough to be set aside. An experiment of this operation, when the lead contained 0·16 per cent. of silver after the first hour's skimming, proved its reduction to 0·03 in five hours, whilst the zinc alloy contained from 0·74 to 0·94 per cent.

"The formation of the poor zinc-lead alloy is accomplished in a similar manner by the addition of fresh zinc only at the third operation.

"(4.) *Separation of Zinc from the Poor Lead.*—The desilverised lead is tapped into pot E, and when the metal is red hot steam is passed through and air excluded. The steam is decomposed and the free oxygen forms oxide of zinc. This decomposition is more readily effected when the steam is in finely divided streams, issuing from several orifices, 1, 2, 3, and in the pipes *a* and *b*, Fig. 160. The oxides are skimmed off, the metal tapped into the pot, F, where it is cooled, and cast into moulds, except a portion which is left to preserve the pot at a uniform temperature, and to afford a covering of oxide for the next charge.

"It is advisable to provide the pot F with a cover, to avoid loss of heat and oxidation.

"All four operations can be effected in the same time, so that as soon as one pot is empty the next charge is also ready to be operated upon, the working being continuously carried on. As combustion of the fuel is never complete under a single pot, in the system of pots here described arrangements are made for the products from the fire under the pot F to pass to the space under E, and so on up to the liquation furnace, by which means also better economy of fuel is effected. The use of gas from an ordinary generator furnace would be still more advantageous."

Much of the value of this apparatus depends upon the method of tapping the metal from one pot to the other. This has been usually done by means of a pipe from the bottom of the pot; but when heated to a high temperature such pipes are apt to fracture. This difficulty has been met by Koch's plan of syphons which pass out at the side of the pot about 1½ ft. above the bottom. Although the arrangement of a satisfactory syphon, and the proper thickness of the vessel at the point where it passes out, offered considerable difficulties in practice, it has been found possible to work them, and to tap off 12,500 kilos. of lead in three minutes without loss.

Desilverising with Zinc at the Muldner Works, near Freiberg.—According to C. A. Plattner, the Parkes process has the following advantages over the Pattinson process:—

"(1) That the work lead need not be refined beforehand, in so far as to effect a separation of any copper, antimony, and arsenic the same may contain; (2) that only small quantities of by-products have to be dealt with; (3) that for the execution of the Parkes process a smaller apparatus is required with a consumption of less fuel; (4) that the separation of the silver from the lead is effected in a much shorter space of time; (5) that the quantity of rich lead is much smaller, but much more enriched, thereby shortening the work of the cupelling hearth; (6) that the loss in lead is much smaller; (7) that in the presence of gold this precious metal is collected in a small portion of the zinc, and a zinc alloy is obtained containing *doré* silver, and the subsequent alloy contains the main portion of silver."

On account of a considerable proportion of foreign metals in the Freiberg work-lead—such as copper, nickel, cobalt, tin, arsenic, antimony, and bismuth—it is found impossible to separate them on the addition of zinc, as is effected in other works where copper and antimony are carried into the zinc alloy. The Freiberg work lead, therefore, has to be submitted to a preliminary refining process. For this reason the Parkes process is carried on in connection with the Pattinson process. One of the important by-products is bismuth, and this metal during the Pattinsonising goes into the enriched silver-lead, whereas the poorer lead becomes free of bismuth, and this poorer lead is then treated by the Parkes process.

The combined installation for desilverising consists of three departments:—

(1) For the Pattinson process serve one or two batteries of nine cast-iron kettles each, having an upper diameter of 1·75 metres, 0·90 metre depths, and capable of holding 150 metre centners.

(2) For the Parkes process there are two cast-iron desilverising kettles *a*, *a* (see Figs. 161, 162 in Plate), each with a separate fireplace, having an upper diameter of 1·98 metres, 1 metre depth, and capable of holding 20 metre centners; three cast-iron hemispherical liquating kettles, *b*, 0·55 metre diameter, one refining furnace, *c*, with a hearth of refractory material, having a length of 3 metres, width of 2 metres, and depth 0·45 metre, for the zincification of the poor work lead, and a kettle of cast iron, *d*, having an upper diameter of 1·90, and 1 metre depth, to receive the dezincified work lead.

The apparatus for the Parkes process adjoins the Pattinson apparatus, but the Parkes apparatus is located 2 metres higher. The laboratory of the furnace is also higher, so that the lead

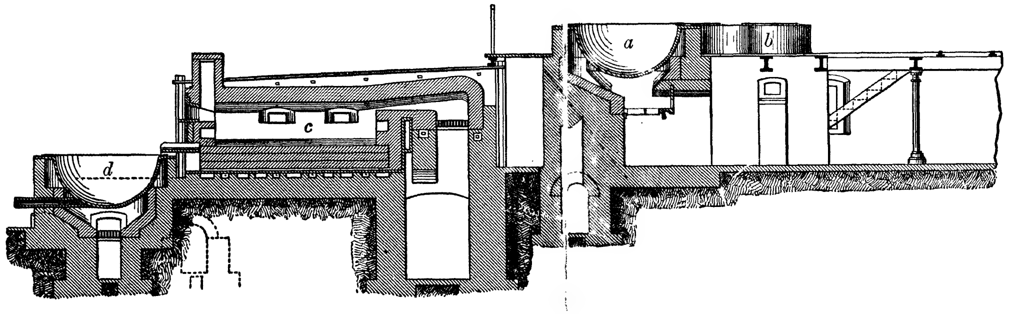

Fig. 161.—Section along a b.

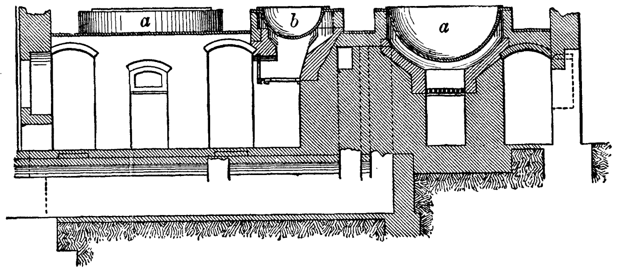

Fig. 163.—Section along c d.

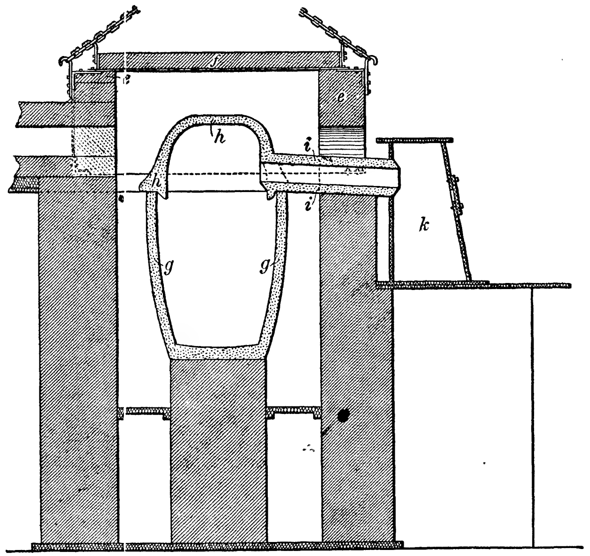

Fig. 165.—Battersea Zinc Distilling Retorts.

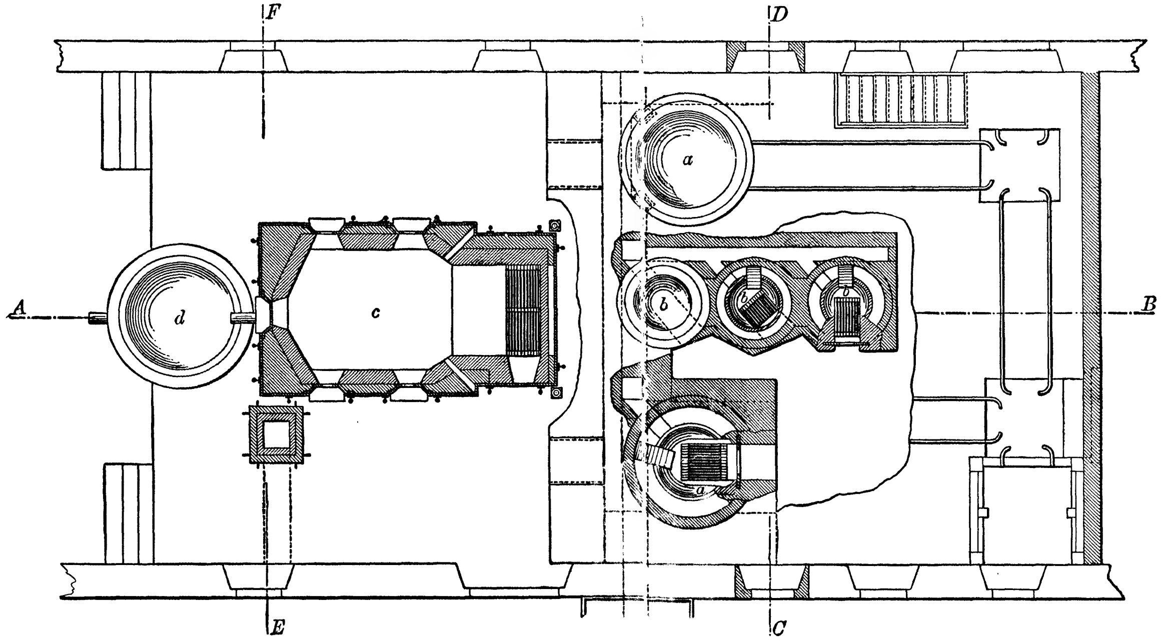

Fig. 162.—Plan.

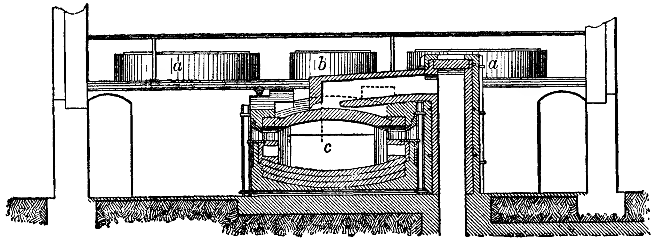

Fig. 164.—Section along e f.

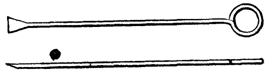

Fig. 168.

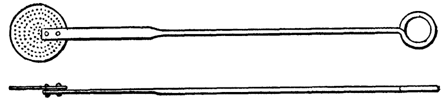

Fig. 166.

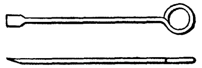

Fig. 169.

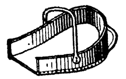

Fig. 170.

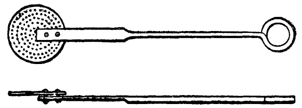

Fig. 167.

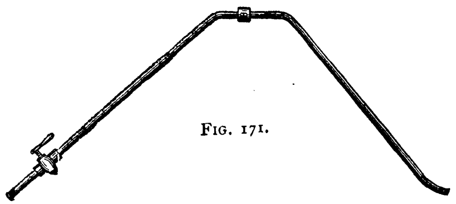

Fig. 171.

▨ Graphite.

▨ Masonry in Brick.

▨ Fire Bricks.

▨ Cast Iron.

■ ▨ } Wrought Iron.

Figs. 161—171.—The Refining Works (by Means of Zinc) at the Royal Muldner Hütte, near Freiberg.
Scale for Figs. 159 to 162 = 1 : 500; for Fig. 163 = 1 : 25; for Figs. 164 to 169 = 1 : 40.

[*To face p.* 290.

can be drawn into the lower kettles by means of syphons. The molten lead from the Pattinson kettles, containing 0·1 per cent. silver, which is intended for the Parkes process, is pumped up by means of Rösing's steam pump.

(3) The third portion of the apparatus is in a separate compartment consisting of the furnaces for the distillation of the zinc scum. For this purpose there are two wind furnaces holding each one large plumbago crucible, of the Morgan patent (manufactured by the Morgan Crucible Company, Battersea, London), which are connected with an iron condenser (Fig. 165 in Plate). These furnaces are round, 0·75 m. in diameter and 0·90 m. deep to the grate bars. On top is an iron ring, *e*, on which rests a cover, *f*, made of fire-clay slabs, which are held together by means of a ring of angle iron. This cover is raised and lowered by means of tackle and pulleys.

The Morgan pots, which serve for the treatment of the zinc scum, consist of three parts as shown in the illustration, namely (*a*) the main crucible, *g*, about 40 c.m. wide on top, 30 c.m. at the bottom, and 55 c.m. high, and 5 c.m. thickness; (*b*) the hood, *h*, about 20 c.m. high; (*c*) the allonge, *i*, for carrying away the zinc fumes, about 50 c.m. length, 10 c.m. inner diameter, and 2½ c.m. thickness.

The condenser, *k*, is made either of cast or heavy sheet iron, and is a box, which is 25 c.m. wide at bottom, 17·5 c.m. wide on top, and 50 c.m. high, which rests on a cast-iron plate and its cover can be lifted off. There is an opening into which the allonge, *i*, fits, and opposite a small opening to watch the operation of distillation, which can be plugged up.

The operation of desilverising is as follows: the refined work-lead, containing over 0·1 per cent. of silver, is put into the corresponding kettle of the Pattinson battery and the lead enriched to 2 per cent., and poor lead of 0·1 per cent. silver produced goes to the Parkes process, and the rich lead to the cupelling furnace. After fusion of the lead in the desilverising kettle, the abstrich which is formed is skimmed off, till the clean surface of the lead is formed. The firing is now continued till the smelting point of the zinc is reached, when the zinc is added. The temperature of the bath is about 500° C. The zinc is stirred in by one workman while a second workman takes off the crust of zinc scum which forms on the periphery of the kettle and transfers it to the liquating kettle. The first scum is the rich zinc scum, and the other zinc scum being too poor in silver is used again in another desilverising operation where the poor zinc scum gets enriched. After the zinc scum is taken off the fire under the kettle is increased, so as to maintain the necessary temperature for the next zinc addition. Before a new addition of zinc is made a sample of the lead is dipped out and assayed, and this is repeated every time a fresh addition of zinc is made, till the contents of the lead are reduced down to 0·001 per cent. in silver, and the desilverising is stopped. The lead from the kettle is now syphoned into the refining furnace, and the desilverising kettle used for a fresh operation.

The rich zinc scum is treated in the liquating kettles, and the lead which drips out is turned back to the desilverising kettle, and the rich scum is kept for distillation. Each kettle, containing 200 metre centners of lead with 0·01 per cent. silver, requires altogether 215 kilograms of zinc, which is added in three portions—100 kilograms first, 75 next, and 40 kilograms last. A large proportion of the silver and most of the gold goes into the scum after the addition of the first portion of zinc. It is more difficult to remove the last traces of silver.

The poor lead syphoned into the refining furnace is refined by freeing it of its zinc contents. This is effected by keeping the molten lead at a high temperature and leading a good current of air over the bath, which can be done by introducing compressed air, or by having a number of openings in the fire bridge and furnishing air from the outside by natural draught. Through the action of the air a crust of lead and zinc oxide forms on the surface of the bath, which is drawn out through the working door till the bath appears bright and clear and a new crust will form again after a while, and the crust is drawn off till it is noticed that pure litharge only forms, then the tap-hole is opened and the lead drawn into a previously heated kettle, from where the lead is drawn through the tap into moulds.

The crust, or abstrich, after a sufficient quantity has accumulated, is returned to the refining furnace, and some lead is liquated out of it, and the crust which now remains is drawn out and turned over to the blast furnace, where it is mixed in the ore beds with other ores. The abstrich from the refining furnace is also sold to paint works direct, who on grinding it employ the material in their manufacture.

Distillation of the Zinc Scum.—The zinc scum is mixed with 1 per cent. of coarse charcoal powder, and the bottom of the crucible is covered with pieces of charcoal about the size of walnuts, and the crucible is then filled with the zinc scum. The hood is then placed on the crucible and well luted with a plastering made of one part clay, one part brick dust, and one part coke dust. The empty portion under the hood is then filled with scum and the allonge is now inserted and also well luted. The furnace shaft around the crucible is well filled with coke nearly to the top of the hood and lit from top by placing some incandescent coke on it, and the cover is let down on the furnace. The iron condenser is pushed against the allonge and the connection well luted, but the cover is not placed on the condenser till some carbonic oxide escapes, which causes a slight explosion.

When the distillation commences and zinc vapours deposit in the condenser, it will become necessary to watch the progress by observing through the small opening that no accumulation takes place in the allonge, which has to be removed by means of an iron scraper, and when the allonge is not bright red more coke must be added. When the distillation is finished, the condenser is removed, and the grating of the furnace cleared of clinkers, and the hood removed as quickly as possible from the crucible; as otherwise, on cooling, it may stick so hard to the crucible as to necessitate the destruction of both. The rich lead which has accumulated in the bottom of the pot is now ladled out and poured into moulds. The same operation is repeated for a fresh charge.

With a charge of 225 kilos. the operation takes about eight to nine hours; and the durability of the crucibles is astonishing, as over 100 charges have been treated in one crucible.

The products obtained from the zinc scum are:—

57·17 per cent. rich lead containing 0·0186 per cent. gold and 7·35 per cent. silver.
5·85 per cent. scrapings containing 0·0112 per cent. gold, 4·608 per cent. silver, and 3½ per cent. copper.
29·54 per cent. metallic zinc.
7·22 per cent. zinc dust.

The Luce and Rozan Process.—Here also, as in the Giraud process described above, steam is employed as an agent in refining and desilverising lead. For this purpose the crude argentiferous lead is melted down in a vessel which is provided at its lower end with a spout closed with a slide, through which the molten lead is caused to flow down into a lower vessel heated only at times directly by a special fire, and at other times by the waste heat from the fire of the upper vessel. When the lower vessel is full, steam is introduced through a central pipe leading down to near the bottom of the vessel, where it is provided with a cock turned by a rod from above and with a disc for the purpose of dividing the steam as it enters. The steam in passing up through the molten lead effectually oxidises all impurities, which then rise in the form of scum to the top of the metal, whence they are removed.

The introduction of the steam produces also a violent ebullition of the lead, causing it to crystallise, and when this crystallisation has taken place to a sufficient extent the introduction of steam is stopped by closing the cock on the steam-pipe and the remaining liquid portion of the lead, in which the greater proportion of the silver will be found concentrated, is run off through one or more spouts into troughs turning on pivots for conducting the lead into a series of ingot moulds. During this time a fresh charge of lead containing a percentage of silver approximating to that of the crystals in the lower vessel has been melted down in the upper vessel, and is run into the lower vessel as soon as all the liquid portion has been removed therefrom. Steam is then again introduced, effecting a further purification and separation of silver; and this process is continued until by the repeated crystallisation one part of the lead is rendered sufficiently free from silver to be used as merchant lead, while the lead run off is sufficiently rich in silver for the cupelling process.

In the illustrations, Fig. 172 shows a vertical section of the apparatus; Fig. 173 a section at right angles to the section at Fig. 172; and Fig. 174 a plan. A is the crystallising vat, and H is the upper melting cauldron; B is the pipe for introducing steam into the vat A, which pipe is provided at its lower end with a steel cock C actuated by the rod E attached to the arm

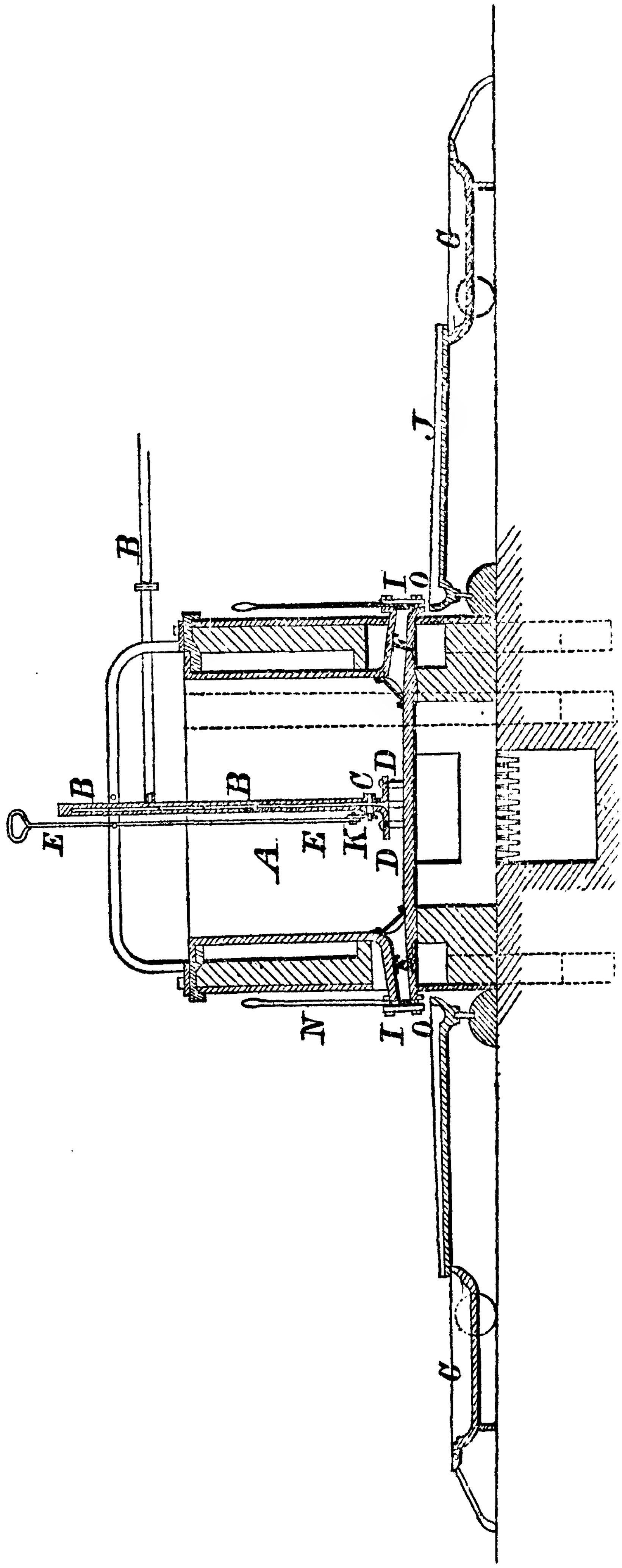

Fig. 172.—The Luce and Rozan Apparatus.—Vertical Section.

K fixed to the plug of the cock; F F are spouts adapted to the vat A, and F′ is a similar spout adapted to the cauldron H.

Each spout is closed or opened by means of a lever N (shown on a larger scale in Figs. 175 and 176) hinged at O, which constitutes a slide fitting exactly against the planed surface of the flange I on the end of the spout, the slide being kept against the flange by means of the guide S secured to the flange by means of two screw bolts T, by screwing up which to a greater or less degree the pressure of the slide against the orifice of the spout is regulated. By lifting the slide, the orifice of the spout is uncovered more or less so as to regulate the flow of the melted lead.

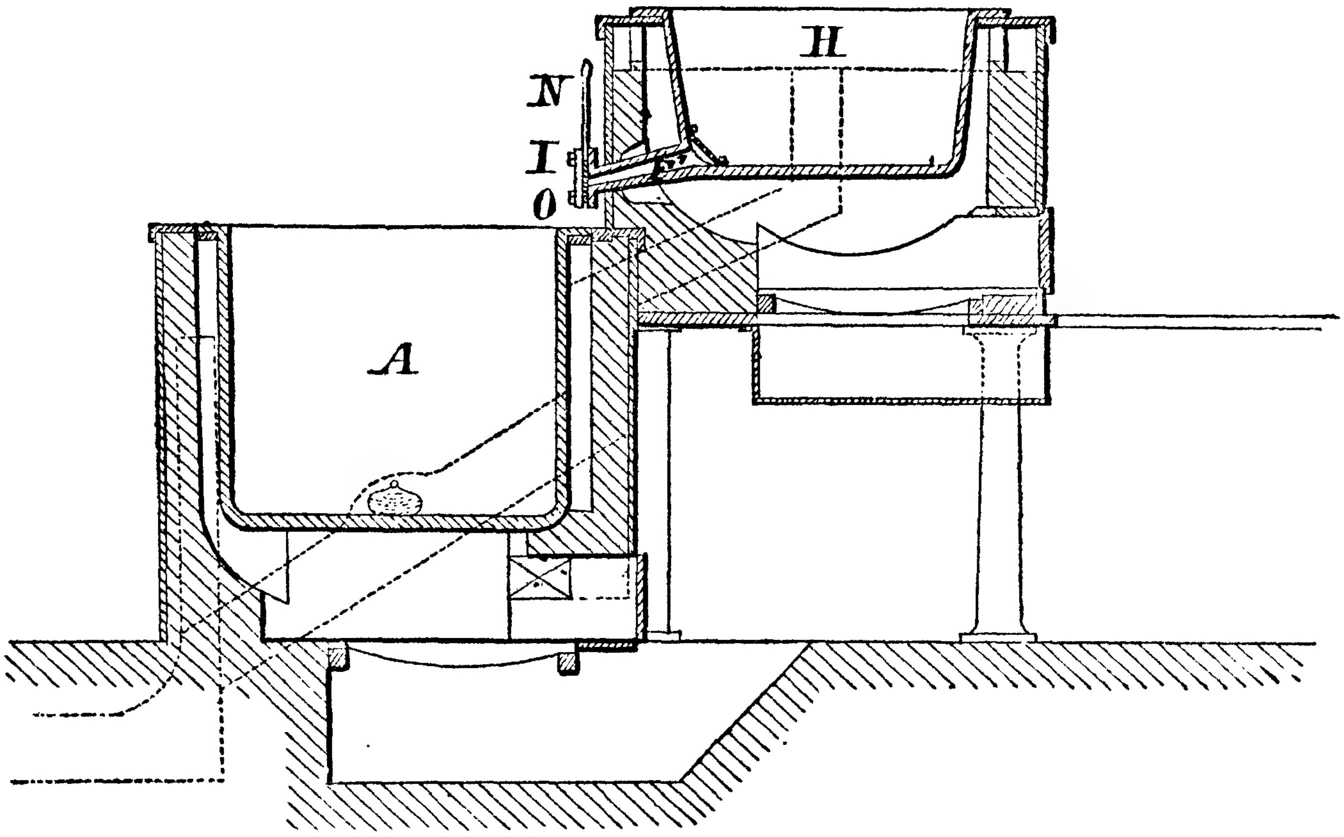

FIG. 173.—THE LUCE AND ROZAN APPARATUS—Vertical Section.

In operating, steam is introduced through the pipe B into the vat A, and in passing in the steam is distributed equally by passing from under the plate D, and, under a pressure of three atmospheres, agitates the bath of molten lead so as to produce crystallisation in proportion as the temperature decreases. In passing through the molten metal the steam is decomposed and produces oxides of lead, antimony, and copper according to the degree of impurity of the lead, and these oxides on rising to the surface are removed as above stated.

When the proportion of lead crystals appears to be sufficient, the current of steam is stopped by closing the cocks C, and the spouts F are opened so as to allow the molten portion of the lead, in which is concentrated the greater proportion of the silver, to flow into the ingot moulds, G G, by means of a shoot J turning on a pivot, as shown. As soon as all the lead is run out the spouts F are closed. While the crystallisation was proceeding in the vat A a fresh charge of lead has been melted

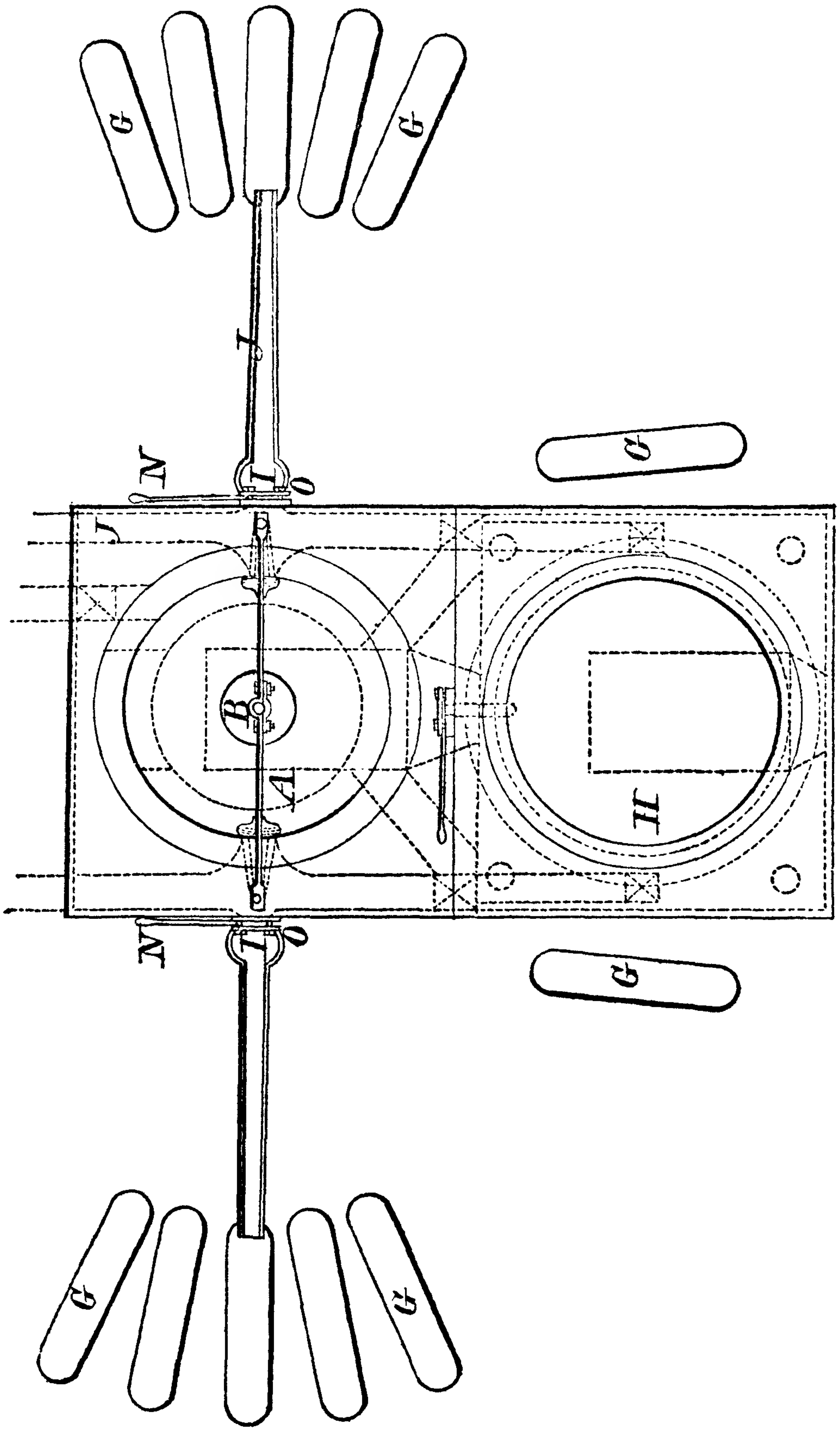

Fig. 174.—The Luce and Rozan Apparatus.—Plan.

down in the cauldron H equal in quantity to that run into the moulds, and having a percentage of silver approximating as nearly as possible to that of the crystals in the vat A. This charge is then run down into the vat A and melts the crystals there formed. Steam is then again introduced, and the operation repeated.

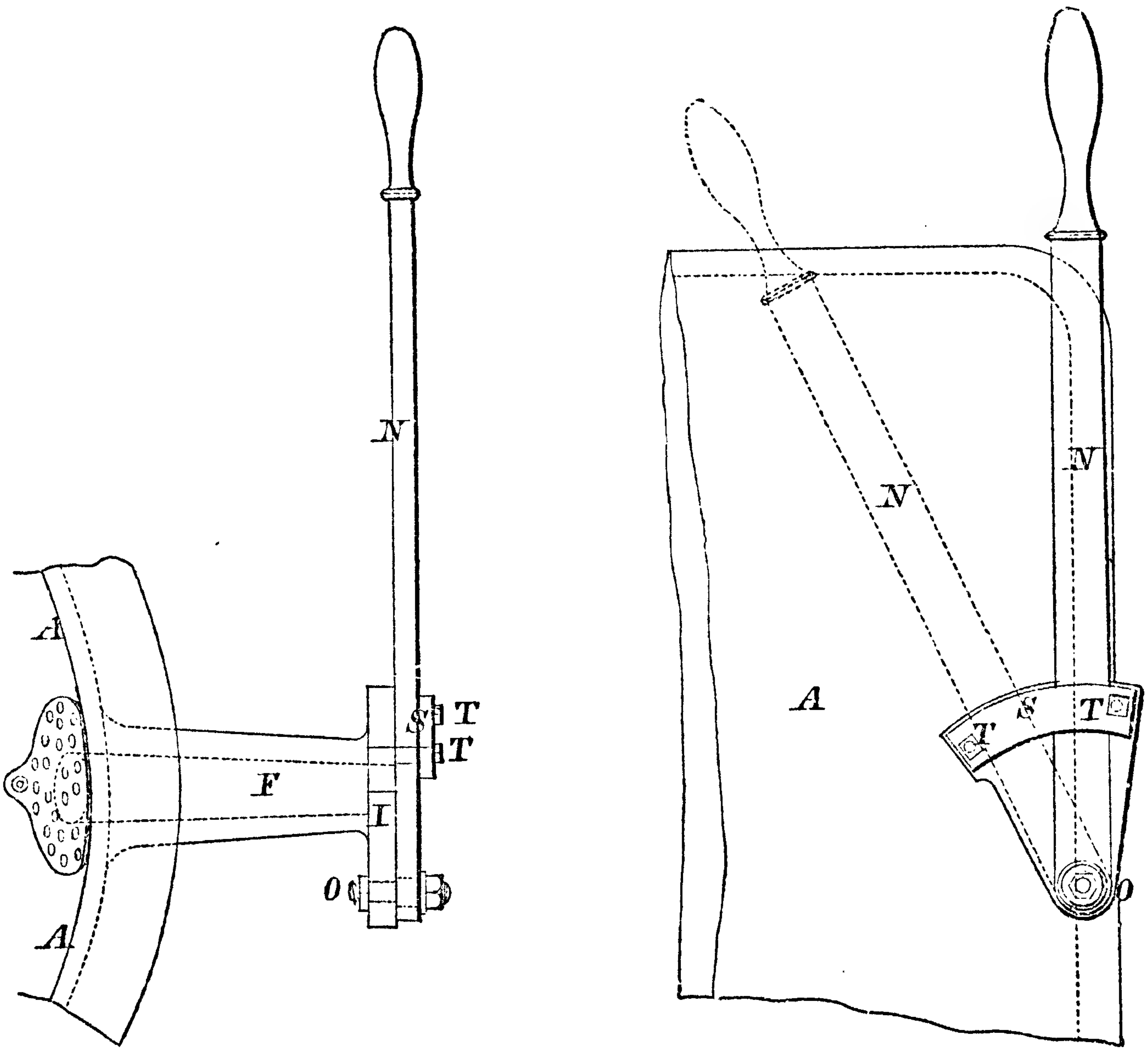

Fig. 175. Fig. 176.
The Luce and Rozan Apparatus.—Spouts and Lever.

The duration of each operation, for 12 to 13 tons of argentiferous lead, is about from 2 to 3 hours.

M. Rozan makes the following comparison of cost and loss of lead and silver:—

	Cost per ton.	Loss of Lead.	Loss of Silver.
Pattinson's hand process . .	46·54 francs	3 per cent.	1·5
Pattinson's steam process . .	25·82 „	2·1 „	1·5

The steam process has now been in successful operation at several of the English lead works, and the fact that it is effectual for the removal of copper to a greater extent than by the hand process has been well established. Mr. Baker has shown that, in the old process, when the proportion of copper does not exceed 0·025 per cent., it is found to follow the silver; and lead with such a tenure may be refined for the purpose of making glass-maker's red lead. When, however, the copper reaches about 0·05 per cent., six or seven crystallisations fail to reduce it below 0·07 per cent. Nickel, also, in the proportions found in Derbyshire lead, viz., 0·002 to 0·005 per cent., is found to become concentrated in the fluid portion.

The Cordurié Process.*—M. Cordurié has patented a process for the application of superheated steam, which readily oxidises iron, nickel, and zinc, but only slightly acts upon copper, antimony, bismuth, and lead. As zinc alloys first with copper and what traces of gold may be present, and afterwards takes up silver, the use of steam seems appropriate to the removal of the zinc, although it leaves antimony behind. Kerl states that in the Upper Hartz the steam processes yielded 97·024 per cent. of lead. Subjoined is a description of Cordurié's process applied to the desilverising operation.

The zinc is either melted in the bath of lead and stirred with iron paddles, or placed in an iron box, as in Fig. 177, and plunged to the bottom of the fluid metal in the pot A, so that the melted zinc rises in divided streams, and is mixed by means of a shaft to which the box is attached, and with which it is caused to rotate by turning the crank handle, which is geared to the shaft by toothed wheels. After the stirring apparatus is taken out and the zinc alloy removed, the desilverised lead is tapped into a gutter, *g*, which conducts it into the pot, *d*, where it is submitted to a current of steam, which is introduced by a pipe, *h*, passing through a movable dome-shaped cover, *e*, which is furnished with another pipe, *f*, to conduct the steam away. The cover also protects the workman from the injurious vapours arising from the operation.

The steam is superheated by passing through the flue, *n*,

---

* This is practically an application of Giraud's process.

and is applied to the melted lead when it is at a low red heat. When a sample shows that the zinc has been completely removed, and the cooled surface exhibits the crystalline character of antimonial lead, the steam is allowed to pass through the metal for a short time longer to avoid explosions; the cover is removed, and the lead skimmed. Afterwards air is admitted with the steam, until the antimony is oxidised and the iridescent colours peculiar to softened lead appear.

In carrying out the process, the refining kettle is covered with the hood of sheet-iron. In order to give the lead the cherry-red heat required for the process, the metal surface is covered with charcoal and the fire urged. The temperature attained, steam is now passed into the lead, but only after the conveying pipes have been freed from water which, if blown into the lead, would cause serious explosions. During the oxidation of the zinc all the doors must be closed in order to exclude the air. The zinc is oxidised by decomposition of the steam, and rises to the surface as oxide of zinc, where it melts with oxide of lead, formed on the metal surface. In the beginning of the process the oxide mixture is semi-fluid.

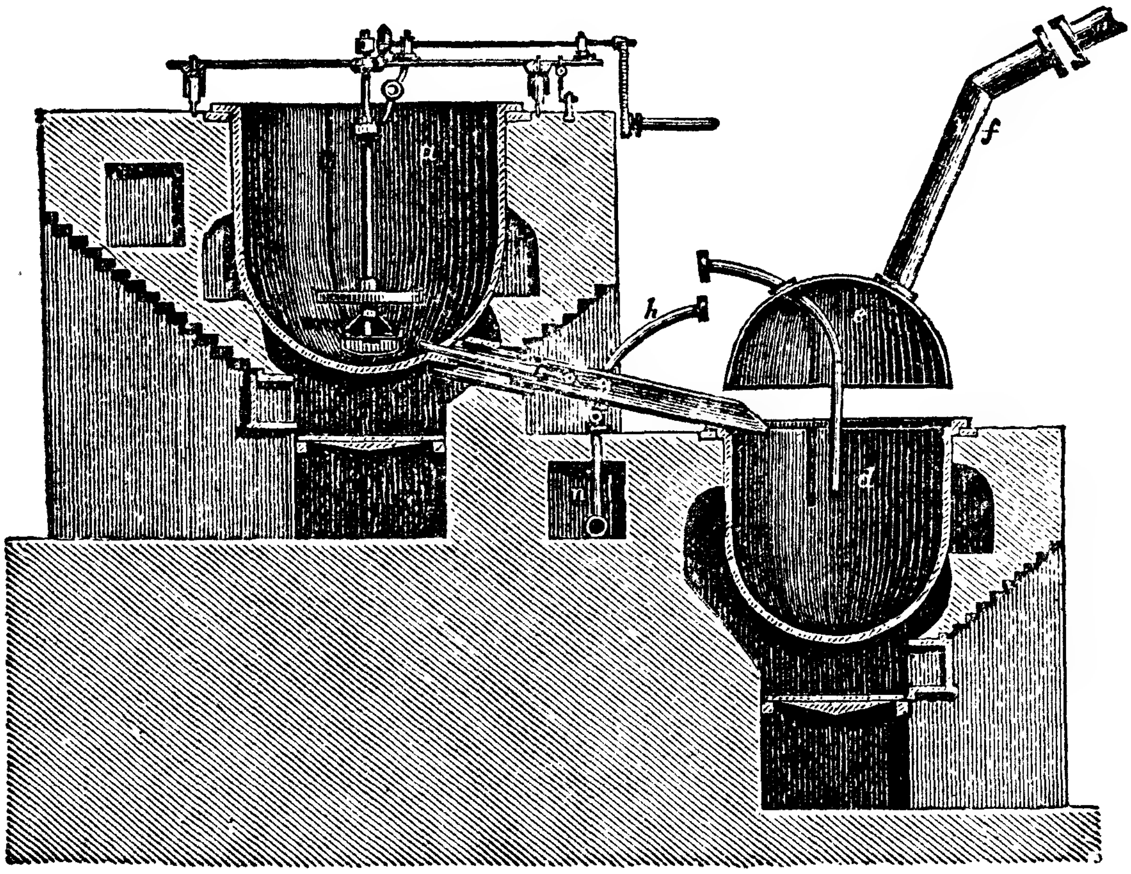

FIG. 177.—CORDURIÉ'S APPARATUS.

Steaming is continued until the mixture is perfectly dry, which is a sign of completed dezincification. Another test for zinc is to take a ladleful of lead, and pour this out in drops after it has cooled somewhat.

If the lead is not completely dezincified, the zinc contained in the drops of lead will solidify and remain behind, forming *Zinklappen* (zinc rags), which hang down the ladle. The non-appearance of these *Zinklappen* is a sign of completed dezincification. A crystalline star on the surface of a solidified sample of the lead indicates the presence of antimony, in which case the lead is subjected to further steaming after the zinciferous oxides have been removed. The doors of the hood are open during this operation, in order to allow the air full access. In this period mainly antimony is oxidised, with little lead, the oxidation of which rapidly increases as soon as all antimony is removed. The sign for completed refining is the formation of "gold litharge" on a skimmed sample.

At Tarnowitz the completion of refining is determined by pouring a sample of the lead, after it has cooled somewhat, on a stone. In case of pure lead the plate of lead is plain, and shows large crystalline faces. If the lead is pure, the hood is removed, the antimonial oxides are taken off, and the lead, after it has cooled, is ladled into moulds. The hood which covers the refining kettle is connected with condensing chambers, where the powders, which have been carried away by the hydrogen and the excess of steam, are deposited.

At Havre the desilverised lead contains 0·75 per cent. of zinc and very little antimony. Dezincification is carried out in separate kettles, which hold only half the quantity of lead treated in the desilverisation kettle.

The Cordurié Process at Messrs. Rothschild's Works at Havre.*—The ground plan of the arrangement adopted at this well-known establishment is shown in Fig. 178, and a section is given in Fig. 179.

---

* These works and their operations are fully described in the *Zeitschrift fur das Berg, Hutten und Salinenwesen in den Preussischen Staate*, vol. xvii.

The desilverising kettle should be placed at a higher level than the other, as shown in Fig. 179, but at Havre, for want of fall, all the kettles are on one level, and the desilverised lead must be ladled out. The kettles have a hemispherical bottom, with iron at the bottom $3\frac{7}{8}$ inches thick, which is double the thickness of the sides. The desilverising kettle holds 22,000 lbs. of lead; the refining kettles are somewhat smaller, and two of these go to each desilverising kettle; lower down are small kettles for liquating the zinc scum, one of which is placed alongside of each desilverising kettle. The

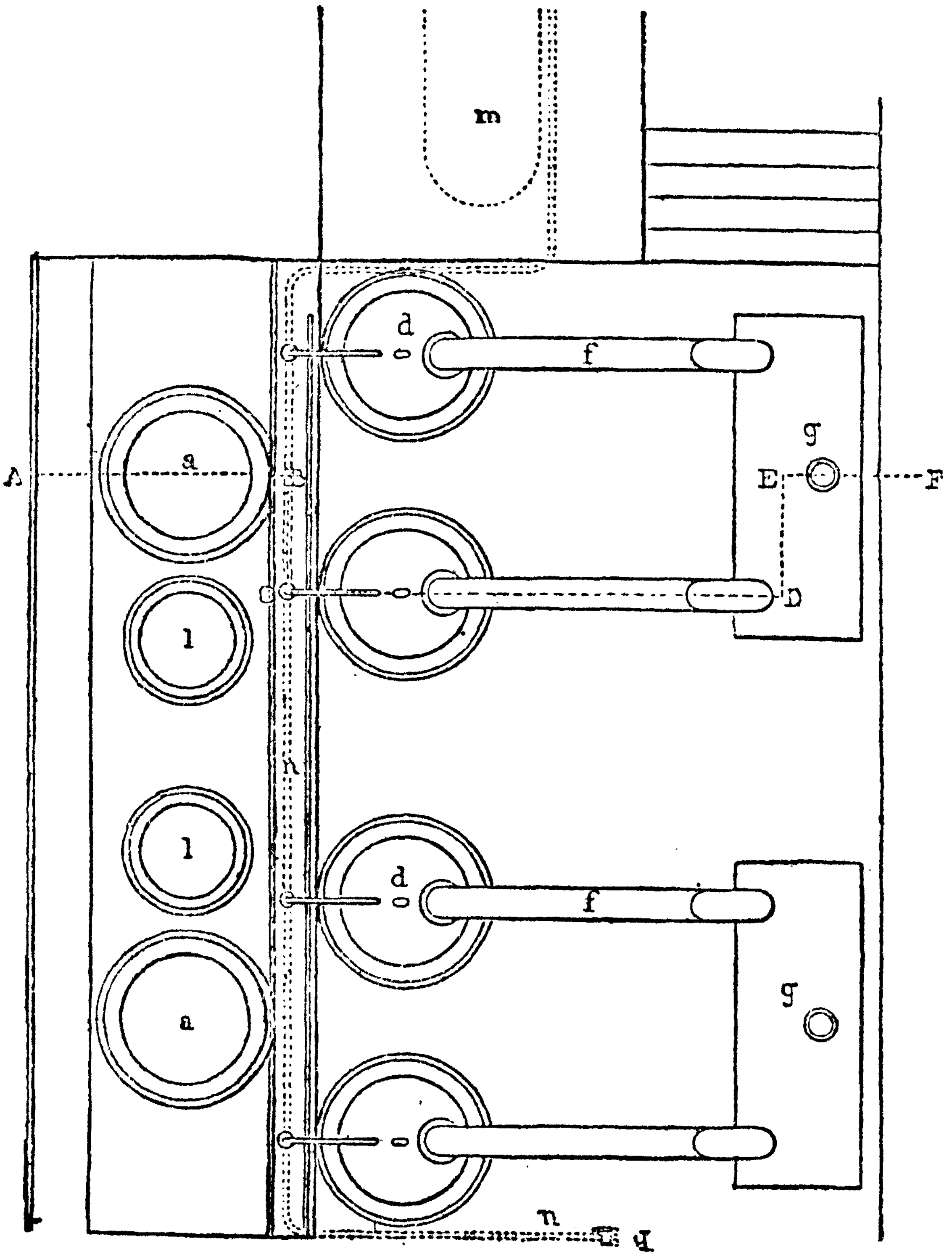

Fig. 178.—Cordurié Plant at Messrs. Rothschild's Works, Havre.—Plan.

fires under the different kettles are independent of each other. *a* are the desilverising kettles; *d* the refining kettles, which are closed by movable hoods of sheet-iron, fitting into a groove in the edge.

The hoods are connected by sheet-iron pipes, *f*, with condensation chambers *g*, of which there is one for each system. The steam supply pipe, *n*, is conducted along the flue *p*, by which a superheating of the steam is effected. There is an arrangement, at the lowest point, by which the condensed water can be blown out of the pipe before the commencement of the operation.

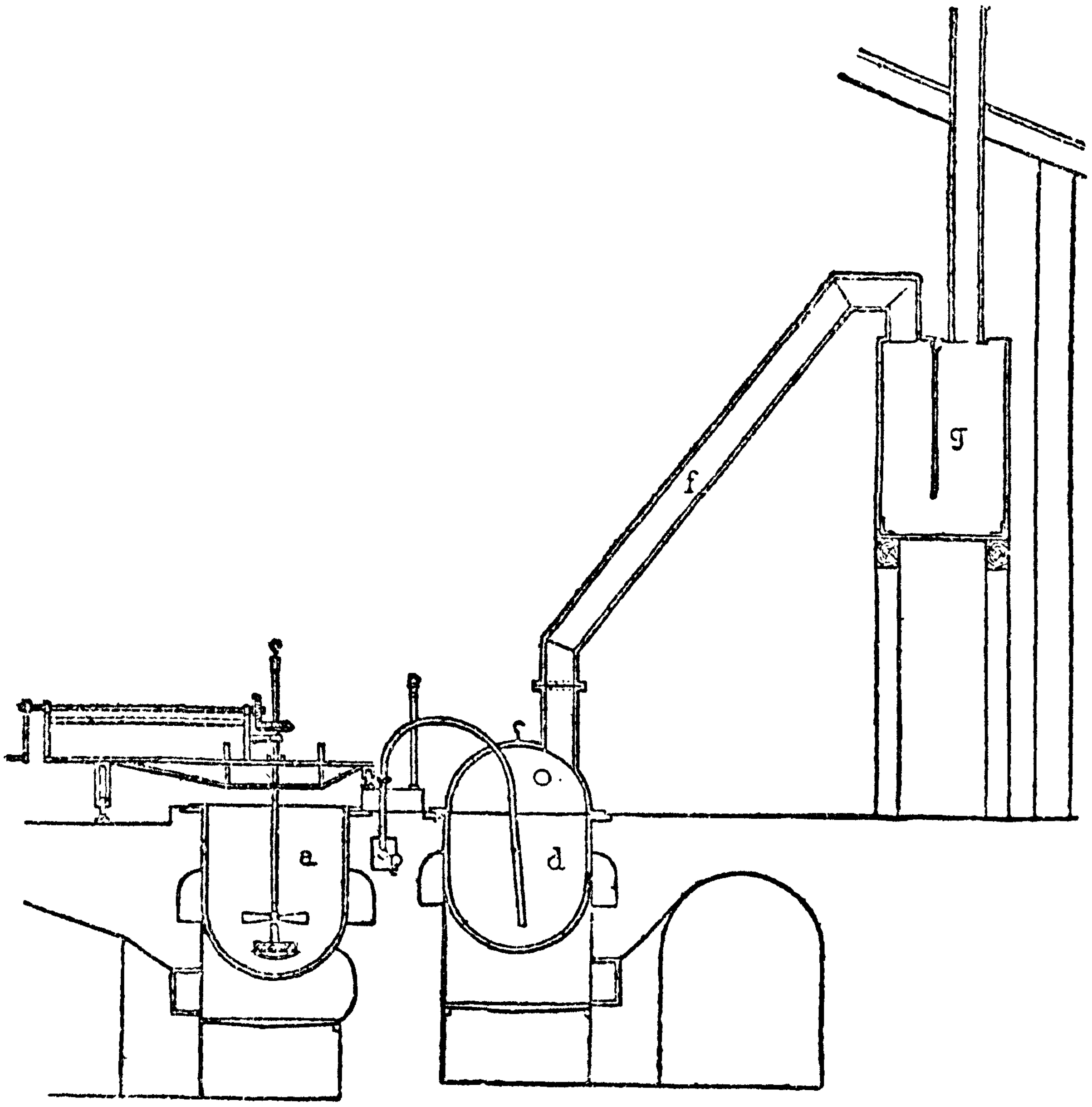

FIG. 179.—CORDURIÉ PLANT AT MESSRS. ROTHSCHILD'S WORKS, HAVRE.—Section.

The high temperature employed in Corduriè's process, and the antimony contained in desilverised lead, effect a rapid corrosion of the kettle during refining, and cause the formation of cavities in it. If refining and desilverisation are carried out in the same kettle, argentiferous zinc may settle in the cavities during zincification, and cannot therefore be removed by skimming. In refining the desilverised lead, the deposits are thrown out of the holes by the violent agitation in the metal bath, and the lead is thereby enriched. For this reason refining in separate kettles, which is highly advantageous, has been introduced at Havre. In order to facilitate the process, two kettles are used for refining one charge of desilverised lead.

At Havre superheated steam of sixty to seventy pounds pressure is pressed into the lead, and refining is completed in three hours. The lead produced is of a very good quality. The quantity of oxides formed amounts to from two to three per cent. of the lead operated upon, and the direct yield of lead is 82 per cent. of the base bullion treated. As only minute quantities of antimony are contained in the lead, dezincification is sufficient. The powdery mass on the metal surface consists in 100 parts, of shots of lead 79 parts, of oxide mixture 21 parts. 100 parts of the oxide mixture contain: 61·4 parts lead oxide, 30·8 parts zinc oxide; the rest being iron, carbonic acid, &c.

These powders are washed with a little water on an inclined table, 6 feet long, which is divided into two compartments. The shots of lead remain on the upper compartment, and are returned to the refining process. On the second compartment oxides very rich in lead accumulate; these are reduced in a reverberatory furnace. The third product is a mixture containing approximately equal parts of oxide of lead and oxide of zinc; this passes through a sieve in the lower compartment of the table, and is collected in a reservoir. These oxides are subjected to decantation in barrels, hereby yielding two products: a mixture of oxides containing 60 per cent. of lead, and a mixture of oxides containing 30 per cent. of lead.

The first mixture is treated with hydrochloric acid, in order to extract the zinc; the residue is reduced in a reverberatory furnace. The second mixture is dried and sold as paint (oxide of zinc).

Keith's Process for Refining Lead by Electrolysis.—Mr. Keith, of Brooklyn, New York, U.S.A., has proposed and patented a process for refining impure lead electrolytically, and separating therefrom gold, silver, and other metals. Works on a large scale have been erected in New York for carrying out this process, but are not in active operation. Still there are some important features connected with this invention which deserve mention here.

His method consists, primarily, in subjecting the lead to the process of electrolysis—that is to say, to the action of solvents excited by electricity, wherein the impure lead is resolved into its elementary constituents, the impurities are left undissolved, and the lead is at the same time separated and deposited by itself in a purified form. The operation is thus described by the inventor:—" The exposing of the lead to be dissolved to the action of an electric current under the conditions of an anode, in a suitable electrolysing solution or bath. Also, the use of such bath or solution for refining impure lead, aided by the action of heat applied to the solution. Also, the combination of a series of two or more baths with the same battery or generator, and with each other, by electrically connecting the cathode of the first bath of the series with the anode of the second bath, and the cathode of the second with the anode of the third, and so on. Also a bath composed of an acidulated solution of a salt of lead, for the purposes hereinafter set forth. Also the double operation of separating the impurities from the lead, rendering them easy of refinement, and at the same time obtaining metallic lead in a pure state."

In carrying out the operation, a competent generator of electricity is used in connection with a suitable bath composed of an electrolysing solution, into which the lead to be treated is introduced as the positive pole of the battery, and any metallic or other electric conductor as the cathode or negative pole.

For the bath solution are used some of the salts of lead; but in the action of normal solutions of the neutral salts of lead, sub-salts and oxides form upon the electrodes and in the solutions, thus decomposing the solutions and stopping the electrolytic action by reason of the non-conducting coating on the electrodes, and the changed character of the solutions, in consequence of which the electrolytic action gradually grows less, and often ceases altogether, and at best it is imperfectly carried on in normal solutions. To overcome these difficulties, solutions of acetate of lead, of chloride of lead or of nitrate of lead are used, each made acid either by acetic or hydrochloric acid, it having been ascertained (says the inventor) by practical experience that this acidulation of the said solutions prevents such formation of sub-salts and oxides upon the electrodes, whereby the electrolytic action remains unimpaired an indefinite length of time.

It is necessary to use solutions of salts of lead, which, under the exciting influence of electricity as applied in the electrolytic bath, do not dissolve gold, silver, and other constituents of commercial impure lead, pig lead, or of lead known in the market by the name of "base bullion," but will dissolve such lead. The solution or solutions of acetate, or chloride, or nitrate of lead made acid are therefore used as described, as these readily dissolve the lead when electrolytically treated, but do not dissolve the gold, silver, and other metals.

Various other solutions also, notably those of oxide of lead in solutions of caustic soda, can be used. One of the best (Mr. Keith affirms) is a solution of acetate of lead made acid by acetic acid; and a very good solution consists of sulphate of lead (which has not been used before in the electrolysis of lead) dissolved in solutions of the various acetates and chlorides of the alkaline metals, such as sodium, ammonium, potassium, and the like; this solution can be used acid, neutral, or alkaline, and does not form insoluble salts. The solutions of the alkaline metals are used in which to dissolve the sulphate of lead because they dissolve the sulphates readily, and also form good conductors for the electric current. Nearly saturated solutions are better, though almost any strength of solution may be used.

The solution having been placed in a proper vessel, some impure lead—which preferably should have been previously cast or rolled into sheets—is attached to the positive pole of a generator of electricity, and immersed in the bath, thus making it an anode. To the negative pole a sheet of copper, brass, lead, or other metal or carbon immersed in the bath is attached, thus making it the cathode. The necessary current of electricity (which may be procured from any source, but preferably from magneto-electric or dynamo-electric machines) is now turned on.

The resulting operation is thus described by Mr. Keith:— "As long as a current of electricity flows in this circuit, lead is dissolved from the anode, and deposited in a pure crystalline metallic form on the cathode, from which it may be removed for melting into commercial shape, or otherwise utilised. Such gold, silver, antimony, copper, tin, and the like as may be in the anode remain undissolved, and gradually drop off the surface of the anode in the shape of a fine powder into properly placed receptacles, whence the powder may be removed for subsequent refining, or melting, or sale; or the anode may be placed in a bag of muslin or like material, which will retain the undissolved impurities, so that they may be readily removed."

The size and number of the electrolysing baths may be increased to accord with the necessary extent of the operation; and where a series of two or more baths for electrolysing lead are to be used, they are so arranged that the cathode of the first bath of the series is electrically connected with the anode of a second bath, and the cathode of the second bath with the anode of the third bath, and so on through any number. This is described as a valuable plan. "It has been found," says Mr. Keith, "that though the resistance thus added to the electric current decreases the current passing, and the amount of lead dissolved and deposited in any of the series, yet the aggregate amount of lead dissolved and deposited is increased with a corresponding decrease in the aggregate consumption of zinc and acid in the galvanic battery connected therewith; or if an electrical machine be used, a corresponding decrease in the power used to drive it. In this manner a great saving is made in the expense of the electricity needed for electrolysing a large amount of lead. It is also found that by heating the solutions used for electrolysing lead their conductivity is much increased, so that electric batteries or machines of much less electromotive force may be used, thus increasing the economy of this process. As the formation of sub-salts and oxides on the electrodes and in the solutions is prevented, the full electrical equivalent of lead dissolved and deposited for the electricity used is obtained, and the solutions are not decomposed."

CHAPTER XII.

ASSAYING OF LEAD ORES AND THEIR PRODUCTS.

THE QUANTITATIVE DETERMINATION OF LEAD IN ORES—Assay of Ores containing Sulphur in Earthen Crucibles, with addition of Iron—Assay of Galena in Iron Crucibles—Crucible Fusion in the Muffle—Assay of Oxidised Lead Ores and their Products—Assay of Tailings for Lead—Assay of Slags—Preliminary Assays for Fusibility of Lead Ores—Assaying Base Bullion—Quantitative Analysis of Lead—Qualitative Determination of Lead and its Soluble Salts—Determination of Impurities in Lead Alloys—Iron Assays—Analysis of Smelting Ores—Outfit for Assaying at the Mines.

The Quantitative Determination of Lead in Ores.—Owing to the easy volatility of lead, the exact amount of the metal to be found in its ores is never correctly established by a crucible or fire assay. Not only does its volatility interfere with the correctness of the result, but on account of its oxidisability some of the lead is carried into the slag, while the reduced lead button is always contaminated with copper, zinc, antimony, or arsenic, if in the ore. The wet assay of lead ores, however, is very seldom carried out in practice. The fire assay, although not exact, answers all practical purposes, for the reason that the lead smelters lose a certain portion of lead in their metallurgical operations; and as the assay of the ore is a repetition on a small scale of what takes place in the smelting furnace, one loss sufficiently represents the other, and the question of loss, therefore, is not taken into consideration.

The influence of foreign substances on the assay results may be thus stated:—*Oxidised Copper Ores* are generally reduced, and the copper goes into the lead button. *Sulphuretted Copper Ores* are partly reduced to a copper matt and partly go into the slag. *Zinc* (except what volatilises) goes into the lead button. *Arsenic* will cause loss of lead by combining with the lead and sulphur, either forming speiss or carrying it into the slag. *Antimony* goes partly into the lead button, and in the presence of sulphur goes also into the slag as a sulphur combination. As a rule antimony is very difficult to separate from lead; and consequently lead ores containing antimony and arsenic should always be roasted at a low heat before assaying.

The methods adopted for the assay of lead ores vary with the character of the ores, the methods applicable to (1) ores and smelting products containing sulphur, being different from those applicable to (2) oxidised lead ores and smelting products containing very little sulphur.

Assay of Lead Ores containing Sulphur in Earthen Crucibles, with addition of Iron.—With this class of ores, metallic iron is the best reducing agent, with or without a small proportion of carbon, and with a sufficient quantity of sodium carbonate to flux the gangue or earthy matter forming the gangue. By using metallic iron, the same acts as a precipitant for the lead by combining with the sulphur. The alkaline carbonate serves to form a slag which assists in reducing the lead, and the carbon, like charcoal powder, reduces the alkali, forming potassium or sodium, which in their turn combine with the sulphur. The carbon plays also a useful part in preventing the injurious access of the atmosphere to the assay.

When properly carried out, the assay will produce 85 per cent. of lead from pure galena, which is within 1½ per cent. of the amount present.

The assay may be carried out either in clay or in wrought-iron crucibles. The former are generally employed, the assay being sufficiently accurate, quickly performed, and cheap.

The charge can conveniently consist of 300 grains of ore, 750 carbonate of soda and potash mixed in equal proportions, and a piece of iron wire bent into horse-shoe shape: cover with salt.

Fusion with black flux and metallic iron.—Take 300 grains of the powdered ore, 100 grains iron wire, with 1,000 grains black flux, and cover with salt. Or take 300 grains of the powdered ore, 750 grains carbonate of potash, 100 grains wheat flour, and 100 grains iron wire. Cover with salt and lay on top a small piece of charcoal.

If the ore contains basic gangue or quartz in large proportion 100 grains of fused borax are added.

The mixtures are introduced into the crucibles and placed in the furnace, and then raised by degree to a strong red heat, at which temperature they should be kept for about half an hour. They are then removed from the fire, given a slight blow to settle all the metallic particles to the bottom, aud set aside to cool. Upon breaking the crucible the lead should be found in the form of a well-defined button attached to the undecomposed iron. A few blows with a hammer directed upon the iron will serve to divide the two, and the lead may be weighed at once.

In an assay of *sulphuretted lead ores with black flux*, the black flux is prepared by taking 2½ parts by weight of red argol and 1 part of nitrate of potash, dried and powdered. The mixture of these two substances is put into a red hot clay crucible, and on the surface is placed a piece of glowing charcoal, the crucible being then placed inside the cold wind furnace, so that the resulting fumes may be carried up the chimney. If too much nitrate is taken all the carbon will be oxidised and, instead of obtaining a mixture of carbonate of potash and carbon (black flux), carbonate of potash only (white flux) will result.

As the black flux is very hygroscopic, a mixture composed of 100 parts potash and 15 parts rye flour can be used. Owing to the evolution of carbonic oxide during the assay large crucibles must be used for assaying with these substances. The mixture is then placed in the crucible and fused in the wind furnace. During the chemical reaction in the crucible, the carbon of the black flux reduces the potash to potassium, which reacts on the sulphide of lead, forming sulphide of potassium. This dissolves some sulphide of lead, which, being slagged off, is lost. For this reason the fusion is preferably performed in a muffle with open crucibles, so as to admit oxygen, which reduces the sulphides and increases the product in lead.

Many assayers withdraw the iron wire or nails from the crucible just before taking the crucible from the furnace. To do this the iron wire is stirred around in the molten mass by means of a pair of small crucible tongs, taking care that no lead adheres to them.

Assay of Galena in Iron Crucibles.—In making an assay in wrought-iron crucibles, the iron for precipitation instead of being added (as in the assay in clay crucibles) as a separate piece among the fluxes, is supplied by the sides of the crucible. New wrought-iron crucibles are used for this purpose, and are formed by bending a thick plate around a mandril, welding the edges together; and then attaching a thick bottom, also by welding. A useful size is 4½ inches in height, 3 inches diameter at the top, and 2¼ at the bottom, which is nearly 1 inch thick. This size will conveniently carry 1,000 grains of ore, and the necessary flux for such a quantity.

The assay charges for such crucibles should be as follows:—Ore, 500 grains; sodium carbonate, 500 grains; cream of tartar, 50 grains. For poor ores a portion of the sodium carbonate is advantageously replaced by borax. The ore being mixed with four-fifths of the bulk of the flux, is placed in the fore part of a suitable copper scoop with the remainder of the flux immediately behind, so that in transferring it to the pot the charge may have a covering of flux alone. When borax is used, it should be placed on top of the charge.

The iron crucible is first heated to dull redness, and the assay placed in it; the heat is then gradually raised, and in about 10 minutes the charge will enter into a state of fusion. The contents are then examined, to see if any matter sticks to the sides of the pot, and if so it must be pushed down, by means of a hot iron rod, into the melted mass; the heat is then raised to bright redness for a few minutes. The pot is now withdrawn and poured into a mould of iron, having two deep conical holes for the reception of the fluid mass. This mould must be previously heated before the assay is poured in.

When cooling in the mould the button of lead collects by reason of its high specfiic gravity at the bottom, and it can then readily be detached from the slag by striking it sideways on a slab of iron. The lead button is well cleaned from any adhering slag, and weighed, and the percentage of the lead in the ore is determined by simple calculation.

In an assay of *Galenas containing iron or copper pyrites, zinc blende, arseniurets, and sulphide of antimony*, the pulverised ore must be first roasted. Weigh out one ounce of the finely pulverised and ground ore, and place it on a roasting dish which has been previously rubbed with red chalk. The ore is first roasted at a very low heat for about an hour, stirring it occasionally with an iron wire. The dish is now taken out and cooled, then rubbed in a mortar again, and replaced in the muffle, and the heat raised gradually. When red hot, some tallow is added at intervals, the mass occasionally stirred, and the door of the muffle is closed, the heating being continued till no more sulphurous vapours are evolved. The assay must be closely watched to avoid clinkering by too high a heat.

After the roasting dish is withdrawn, from the roasted sample 200 grains are weighed out, to which are added 600 grains of black flux, 100 grains borax, and 100 grains powdered glass. The whole is covered with a layer of salt, and a small lump of charcoal is laid on the top when in the crucible.

The fusion should be carried out rapidly, but not at too high a heat, and the furnace, therefore, is fired previously. When the crucibles are withdrawn they are permitted to cool and are then broken. There should be no matte on top of the lead button, which should be soft, and show no indication of foreign metals.

During the roasting, tallow is added, to reduce the sulphates, antimoniates, arsenates. The oxides in the roasted ore are carried into the slag, whereby the oxide of lead is reduced. Any sulphates or sulphides of lead which may be in the ore are reduced in the fusion, through mutual reaction and the presence of oxide of iron.

Some assayers add, before withdrawing the crucible, a small quantity of iron filings, which assist in the precipitation of lead held in the slag as sulphate or sulphide.

Galenas containing foreign sulphides can be more expeditiously treated by an assay with sulphuric acid; and by this method, more correct results are obtained than by the roasting process.

A portion of the finely ground ore is digested in a beaker glass with *aqua regia*, and then evaporated with the addition of some sulphuric acid. When dry the mass is acidulated with a few drops of sulphuric acid, water added, and collected on a filter and washed on a filter. The residue on the filter consists of sulphate of lead and the insoluble earths, whereas the filtrate contains all the soluble sulphate metal salts, which were associated with the galena, and were leached out by washing. The filter is dried first at a very low heat in a clay crucible; then black flux and some iron added, and the heat raised. Sulphide of lead becomes reduced from the sulphate, and in turn is decomposed by the iron, yielding a metallic lead button.

Crucible Fusion in the Muffle.—*If the percentage of foreign sulphides is small and the ore contains earthy substances*, the following mixture for fusion is employed:—200 grains of ore; 400 grains of dried carbonate of potassa, 200 grains of argol, and 100 grains of pulverised borax. Place in a small Battersea crucible and cover with salt, and insert a nail; then put the crucible in a red hot muffle of a large assay furnace.

This system is adopted in the Leadville mines of Colorado, for assaying ores carrying some galena and other metallic sulphides. The mouth of the muffle is closed with glowing coals, and after about 30 minutes the contents of the crucible are fused.

After this fusion of the assay, the draught openings are closed, the glowing coals removed from the muffle, and the door of the muffle left open till the crucibles appear of a dark red colour. This takes about 10 to 15 minutes, but care must be taken to maintain the assay in fusion. This is called *the cooling of the assay*.

The furnace is now brought back again to its original temperature, and maintained red-hot for 10 minutes, and, if the ores contain many foreign sulphides besides galena, for 20 minutes. This is called the *second fusion*. The pots are now withdrawn from the muffle and allowed to cool; when cool they are broken by means of a hammer, and the lead will be found at the bottom of the pot in the shape of a button, which is called *the king*.

The appearance of the king will indicate if the assay has been properly conducted or not. The button must be to all appearances like ordinary metallic lead. If on the plane of separation between the slag and the lead, there remains sticking to the slag lead gray spots, as well as on the top surface of the king, this indicates that some sulphide of lead has not been completely decomposed; the lead percentage obtained is therefore too low, and the assay should be repeated. Loss may also take place if the second fusion is continued too long, as oxide of lead may be formed and carried into the slag.

If a button is very hard, and breaks in two on hammering, it indicates the presence of antimony and arsenic. Such an assay should be repeated with the addition of more flux and longer heating during the second fusion. If the sample of ore contains much oxidised lead ores, a small percentage of powdered charcoal—from 20 to 30 grains—is added for the purpose of reducing the oxide.

In the smelting of this assay, the potash of the carbonate is reduced to potassium, giving its oxygen to the sulphur of the galena with the production of sulphuric acid, while the potassium takes up another portion of the sulphur to form sulphide of potassium. During the reaction, a double compound of sulphide of potassium and sulphide of lead is formed, which is not decomposed by the carbonate of potash; and if during the chemical re-actions going on in the crucible there is produced sulphate of lead (the double compound of sulphide of potassium and sulphide of lead) metallic lead is precipitated, and a lively evolution of sulphurous acid takes place.

The cooling of the assay has for its object the reduction of the double sulphide in the slag. The oxygen in the air acting on them converts portions of them into sulphate of potash and sulphate of lead, and when the heat is raised again the sulphate of lead reacts on the sulphide of lead, producing metallic lead and sulphuric acid. From this will be seen the importance of conducting the cooling and second heating with the greatest care, as in the event of the assay cooling too long too much sulphate of lead is produced in proportion to the sulphide of lead contained in the slag, and the result in the second heating instead of producing metallic lead (oxide of lead) will be produced which goes into the slag, and sulphurous acid is evolved.

Again, if the cooling was not continued long enough and not sufficient sulphide of lead is converted into sulphate of lead, the result will be that during the second heating subsulphide of lead is produced, and only a small portion of lead is precipitated.

Assay of Oxidised Lead Ores and their Products.—By melting oxidised lead with reducing agents, like carbon, lead will be precipitated, but there will be a loss of metal, and for this reason it is necessary to add some flux which is easily fusible and protects the lead from volatilisation. The following mixtures may be employed:—(1) 100 grains of ore or products, 50 grains argol, and 200 grains carbonate of soda, to be covered with salt; or, (2) 100 grains of ore or products, with 300 grains of black flux, to be covered with salt; or, (3) 100 grains of ore or products, 250 grains carbonate of potash, and 50 grains powdered charcoal, also to be covered with salt. Melt the mixture in the wind furnace in clay crucible at not too high a heat: when perfectly fused take out of the fire, let cool, and break the crucible.

It will be observed in fusing an assay that the molten mass is in a constant movement, and little globules of lead will come to the surface of the bath. As long as these little globules are noticeable, the crucible must not be withdrawn from the furnace, but when the contents are in a quiescent state, the lead is collected at the bottom and the pot can be taken out of the fire.

If the ore contains much earthy matter, borax should be added, being a powerful flux. Care must be taken that the assay does not boil over, as the fluxes contain carbon, causing a lively evolution of carbonic oxide.

When cupel bottoms have to be assayed, the following mixture is recommended:—200 grains of pulverised cupel bottoms, 100 grains argol, 250 grains carbonate of soda, and 200 grains of fused and pulverised borax; to be covered with salt.

If the oxidised lead ores contain sulphur or arsenic, the mixtures are prepared as above with the addition of 50 grains of iron wire, which will decompose the sulphides and arsenides.

Assay of Tailings for Lead.—The following is a method of assay of tailings according to Rivot:—Dry the tailings from previous metallurgical operations, weigh out 100 grammes; mix with 150 grammes of caustic soda, and 200 grammes of calcined carbonate of soda. When mixed place these ingredients in a clay crucible; take a thin iron plate bent like a horse-shoe, and stick the two ends into the mixture, so that the upper bend projects out. Place in the wind furnace and fuse. The fusion is well done when on withdrawing the horse-shoe no metallic globules stick to it. The crucible is allowed to cool and then broken, and the resulting lead button weighed.

Assay of Slags.—Slags are assayed to determine if they contain any lead or silver. For this purpose they are pulverised and 1,000 grains weighed out, mixed with 2,000 grains black flux, 250 grains borax, and 100 grains iron. Large quantities are taken for the purpose of obtaining a good-sized silver button after cupellation. The iron is added when sub-sulphides are supposed to have been carried into the slag.

Instead of black flux, carbonate of potash and charcoal can be used.

The quantity of silver contained in the lead ore is ascertained by cupelling the lead button obtained by any of the previous methods, and calculating from the weight of the silver prill so obtained the value of the silver per ton of ore.

Preliminary Assays for Fusibility of Lead Ores.—When a new lead mine is discovered, and no means are on hand to determine analytically the nature of the ore, it will be of importance to the smelter to ascertain first of all what fluxing material the ore will require to run smoothly in the furnace. The assay furnace comes very handy for this purpose, and the following procedure may be adopted:—I would take the ore and break it with a hammer into lumps about the size of a hazel nut, and mix it with any fine ore which may be along with it in the mine, and try to obtain a fair average representative sample, such as will have to pass through the smelter. Then weigh out 10 oz., and, if the ore is siliceous, I would add 1 oz. of limestone, 1 oz. hematite, and 2 oz. basic slags from some smelting operation. Place this mixture in the crucible, all the material being in small lumps, and fuse. The resulting lead button, when compared with the fire assay, will indicate how successful one has been in obtaining the percentage of lead, and the appearance and flow of the slag will also serve as a guide as to the right proportion of fluxes. If no slag is on hand, carbonate of soda can be substituted. Should the slag not flow freely, or flow with difficulty, a new mixture is prepared, increasing the percentage of lime or iron, or decreasing the one employed, and increasing the ore until the right proportion is arrived at.

The above proportions are given haphazard, and it is only after numerous tests of this kind have been made that the right proportion of fluxes to ore can be ascertained, which will serve as a guide to the smelter in his larger smelting operations.

If basic ores are to be treated, the crucible will also indicate the proportion of quartz sand or siliceous silver ores; and, if they are to be got, the smelter can safely add them, so as to obtain a properly flowing smelting mixture.

Assaying Base Bullion.—To determine the value of a ton of lead ingots, the ingots are chipped or bored, and the chips or borings cast into a small ingot, the corners of which are cut off with a chisel and half an ounce weighed out. This is cupelled, and the resulting button of silver, or gold and silver, will indicate the value per ton.*

To determine the value of the precious metals in the lead ore, the buttons of lead obtained in the valuation of the lead ore can be at once used for their estimation. In the reduction of the lead all the silver contained in the ore will be found in the metal, even if the assay is continued so long as to allow of considerable loss of lead by volatilisation. The process to which the lead button is submitted is called *cupellation*, which is carried on in a muffle, in which are placed small cups made of bone ash, called *cupels*. These are brought to a red heat, and the button of lead carefully placed in them, and the heat continued bright red.

The lead button melts very quickly, and is oxidised, forming *litharge*, which is absorbed by the cupel. The button gradually diminishes in size till only a slight coating of litharge remains on the silver, or *doré* silver, causing the peculiar phenomenon called *brightening*, as described under the heading "Cupellation," page 229. The cupel is now gradually cooled, so as to avoid the "spitting" of the assay button, and when hardened the cupel is withdrawn from the muffle, the button detached, cleaned, and weighed, and the precious metal contents per ton of ore computed.

---

* For full details on cupellation and the assaying of gold and silver ores, see my "Metallurgy of Gold," and "Metallurgy of Silver."—M.E.

Quantitative Analysis of Lead. (Pb = 207.)—The solution in nitric acid is digested with dilute sulphuric acid till the same is in excess, and half its volume of alcohol added, when the solution is left standing quietly for several hours and the precipitate will completely settle, after which it is filtered off. The precipitate is washed with dilute alcohol, dried, and the filter paper incinerated separately on the platinum cover, and the ashes added to the precipitate, which is carefully heated in a porcelain crucible. This precipitate contains 73·56 per cent. lead oxide.

If the solution contains baryta, strontium, or calcium salts, precipitation and separation of the lead by means of sulphuric acid cannot be effected. In such cases the lead is precipitated as a sulphide by means of sulphuretted hydrogen, then filtered, and, after drying, mixed with sulphur and heated to redness in a current of hydrogen; then determined and weighed as a lead sulphide.

It should be carefully borne in mind that in dealing with precipitates containing lead, zinc, &c., which, when incinerated on a filter, are reduced to metals, certain precautions have to be taken. The filter paper ought to be separated as nearly as possible from the precipitate and incinerated separately in a porcelain crucible, and then added to the precipitate and heated. The filter paper, with such particles as remain sticking to it, is transferred to a weighed porcelain crucible, which is then heated to redness. After incineration, the ash is moistened with a drop or two of strong nitric acid, evaporated by slightly heating it, thereby converting the nitrate formed into oxide; after cooling, the same is added to the original precipitate, which has been kept under cover of a glass bell, and the whole is now heated and determined as above.

When lead is determined as a lead sulphate,

$$100 \text{ parts } PbSO_4 = 68·3 \text{ parts Pb.}$$

1·066 grams crystalline acetate of lead ($Pb(C_2H_3O_2)_2$, 3 H_2O) gave 0·841 grams $PbSO_4$, corresponding to 0·58 grams Pb. as

$$303\ PbSO_4 : 207\ Pb = 0·841\ PbSO_4 : H\ (= 0·58 \text{ g. found})$$

$$0·849\ PbSO_4 \times 0·683 = 0·58\ Pb.$$

This quantity of lead corresponds to 54·4 per cent. according to the following equation:—

$$1·066 \text{ g. acetate} : 0·58 = 100 : H (= 54·4).$$

According to the formula, $Pb(C_2H_3O_2)_2, 3\ H_2'O$, the quantity of lead found by calculation is 54·6 per cent., and the quantity found by experiment, 54·4 per cent.

Qualitative Determination of Lead and its Soluble Salts.—The soluble salts of lead behave with re-agents as follows:—

(1.) *Caustic potash* and *soda* precipitate a white hydrate freely soluble in excess.

(2.) *Ammonia* gives a similar white precipitate, not soluble in excess.

(3.) *The carbonates* of *potassium*, *sodium*, and *ammonium* precipitate lead carbonate, insoluble in excess.

(4.) *Sulphuric acid*, or a *sulphate*, causes a white precipitate of lead sulphate, insoluble in nitric acid.

(5.) *Hydrogen sulphide* and *ammonium sulphide* throw down black lead sulphide.

Determination of Impurities in Lead Alloys.—(1.) Dissolve the lead in nitric acid, and if a white residue remains the same is either *antimony* or *tin*.

(2.) The nitrate solution is digested with excess of sulphuric acid, filtered, and the filtrate examined—(*a*) for *silver*, by adding hydrochloric acid, if a white curdy precipitate is produced insoluble in hot water; (*b*) for *copper*, by digesting with ammonia, which produces a blue solution; (*c*) for *antimony* and *arsenic*, by conducting a current of sulphuretted hydrogen into the solution, and digesting the precipitate with sulphide of ammonium and adding hydrochloric acid; a yellow or orange coloured precipitate indicates these metals.

(3.) To detect *zinc*, conduct a current of sulphuretted hydrogen into the nitrate solution, and digest the filtrate with sulphide of ammonium, when a precipitate indicates zinc.

Iron Assays.—The ores are assayed for iron by Marguerite's well-known burette process, with a standard solution of permanganate of potash. Gangue is determined by dissolving the ore in strong hydrochloric acid or *aqua regia*, collecting the insoluble residue on a filter, washing well, calcining, and weighing. Some assayers evaporate the solution to dryness at 100° C. before filtering, in order to estimate both gangue and soluble silica. Moisture is determined in the ores by dessication of one pound of ore placed in a copper pan over the muffle furnace, or over a sand bath, heated by a kerosene or other lamp.

Analysis of Smelting Ores.—In an article published in the press,* Mr. George T. Dougherty has propounded the following scheme for the analysis of smelting ores:—

"In this article" (he writes) "I undertake to show how copper, iron, lime, zinc, and silica, and also, if required, lead and antimony, may be expeditiously and accurately estimated in only two portions of ore weighed off (one gram).

"In one portion, the determination of silica, lime, and antimony is made; in the other, lead, copper, iron, and zinc.

"*For silica and lime.*—Dissolve the substance in nitric and hydrochloric acids in a porcelain dish; evaporate to dryness, redissolve in hydrochloric acid, dilute a little, and filter, washing with hot water. Reserve this filtrate for lime.

"Wash out the last traces of lead chloride on the filter with a hot solution of ammonium acetate once, and thrice with hot water. Reject these last washings containing only lead chloride, and burn the filter containing silica in a porcelain crucible in a muffle. Make the first filtrate from silica alkaline with ammonia, stir, and let settle a little, to see if the clear liquid has a blue colour due to the presence of copper. If colourless there is probably no copper, or, any way, under 0·2 or 0·3 per cent. Whether copper is present or not, add to the alkaline fluid 10 or 20 c.c. of yellow ammonium sulphide, enough to make the whole liquid look yellow after mixing and settling;

---

* *Engineering and Mining Journal*, February 8th, 1890.

let it stand for about fifteen minutes (a much longer time is not desirable, for the ammonium sulphide has a tendency to absorb carbon dioxide from the air when exposed to it some time, and thus precipitate some of the lime present, which would be a loss when filtered). Filter out the sulphides of lead, iron and zinc, and aluminium hydroxide, and wash with lukewarm water containing a few drops of ammonium sulphide each time, and throw away the filter with that precipitate. Acidify the filtrate with hydrochloric acid, boil hard for an hour, or evaporate down to little more than one-half its bulk, and filter off antimony sulphide and free sulphur. There the antimony may be estimated in the usual manner, if wanted. Add ammonia in excess to the filtrate, boil, add a sufficient quantity of ammonium oxalate solution, boil again for five or ten minutes, let settle and filter, washing with hot water. Transfer, by washing with hot water and then with hot dilute sulphuric acid from the wash bottles, the precipitate off from the filter unfolded and spread along the upper inside of the beaker, into the same beaker; dilute with 300 or 400 c.c. of water, add 5 to 10 c.c. of concentrated sulphuric acid, and titrate hot with potassium permanganate solution $\frac{1}{2}$ titre of iron = titre of lime.

"I almost hesitate to assert what seems to myself to be an actual fact from my own experience, that the determination of lime in a solution containing much acetate of sodium or ammonium is apt to give too high results. I have adopted this ammonium sulphide method for lime as rather safer, as well as much quicker, than separating iron and alumina as basic acetates, and manganese as binoxide by bromine, and zinc with H_2S, and determining lime in the final filtrate. The ammonium sulphide used must not be too old, as it is liable to contain some carbonate of ammonia.

"*For lead, copper, iron, and zinc,* treat the other portion of the ore with nitric acid in a No. 1 Griffin beaker; heat gently until nitrous fumes are driven off, add some hydrochloric acid, and boil. Let cool a little, add 3 or 4 c.c. of sulphuric acid, put in a triangle of glass rod (made by bending over a gas or alcohol flame) between the beaker and cover, and evaporate to dense fumes of the last acid. Cool and dilute with 150 to 200 c.c. of water, boil, and filter after settling for about fifteen or thirty minutes. Before boiling as above, put in a little pinch of common salt to precipitate the silver present. The filter contains silica and sulphates of lead and lime, while the filtrate has all the copper, iron, and zinc. If the percentage of lead is wanted, the sulphates may be decomposed in a strong solution of sodium bi-carbonate at a gentle heat for an hour. Wash the mixed lead and lime carbonates twice by decantation, and then in the usual manner on the filter. Dissolve them out in hot dilute acetic acid into a separate beaker, and determine the lead by precipitating with potassium bichromate and drying on a tarred filter. $PbCrO_4 \times 0{\cdot}64 = Pb$. This is more reliable than the sulphuric acid modification described by Dr. Percy and used at Bleiberg, in Germany; as in the latter some lime is apt to be precipitated along with lead. Or, the lead can be titrated directly in this acetic acid solution with potassium ferro-cyanide solution, using uranium acetate as the external indicator, which is much more certain than ferric chloride, as proposed by the German originator of this volumetric process. This is by far the best and most accurate volumetric method yet known for lead. The strength of the potassium ferro-cyanide solution should be nearly one-fifth of that used for zinc titrations, and is standardised by lead nitrate, whose amount of lead has been previously determined by potassium bichromate or sulphuric acid. Even Merck's make of this salt, labelled 'C.P.,' has considerably less than the theoretical percentage of lead. Ammonium acetate is inadmissible as a solvent for lead sulphate in this volumetric process, as it affects the titration disastrously.

"Add a few drops of hydrochloric acid to the filtrate from silica and lead sulphate, heat nearly to boiling, pass a quick stream of H_2S gas for about fifteen minutes, filter, and wash. Burn the moist filter which contains copper sulphide in an open crucible, at a low, red heat, best at the mouth of a muffle. If there is much copper, fold the filter in another filter, so that after roasted it may be easily tapped and brushed off into a No. 2 or 3 common tall beaker, put in 5 c.c. nitric acid and cover, heat until nitrous fumes are nearly or quite expelled. Cool and add 10 c.c. ammonia, and titrate with potassium cyanide, shaking the beaker around under the burette. The potassium cyanide solution must be standardised under the same conditions to the amounts of nitric acid and ammonia used.

"To those who object to the offensive odour of H_2S gas, which sometimes laughs at modern inventions like the stink or ventilating hood, and diffuses itself throughout the whole building to the intense disgust of other persons employed therein—to those who would avoid all this, I recommend the use of sodium hyposulphite for precipitating copper at this stage of the process. Instead of adding a few drops of hydrochloric acid as for use with H_2S gas, add a little more sulphuric acid, bring up to a boiling heat, put in at first a minute crystal of sodium hyposulphite, and then at once the rest of the quantity, which must be sufficient, so that after boiling again for fifteen minutes the liquid will be quite colourless. About three or four grams usually suffice. Treat the copper sulphides on the filter in the same manner as above for the precipitate with H_2S, so that it may be brought into solution for titration with potassium cyanide. This modification with either H_2S or sodium hyposulphite for copper is just as accurate as the standard method of precipitating with zinc and redissolving in nitric acid and ammonia for titration with potassium cyanide, and has the advantage of being more handy and rapid.

" Add a little hydrochloric acid and a sufficient quantity of potassium chlorate, but not too much, to the filtrate from copper sulphide or subsulphide in a No. 5 common beaker, and boil hard. It is not quite necessary that the liquid should become perfectly clear and free of white particles of sulphur, if it is judged by the yellow colour of the solution that all the iron has been oxidised. If too much potassium chlorate has been used the boiling solution will smell strongly of chlorine. In order to get rid of this, which will exert rather injurious influences upon the subsequent titration for zinc, evaporate down to one-third or one-fourth of its bulk, or less if necessary. With practice, one will not be apt to add more than a proper quantity of that powerful oxidiser.

"I would warn those who may presume that nitric acid would do instead of potassium chlorate, that excess of nitric acid is nearly as bad as excess of chlorine in its effect on the titration of zinc; and, unlike the latter, it cannot be so easily got rid of, and, even after converting into a nitrate with ammonia, is still more or less injurious. The H_2S filtrate is much more easily oxidised, or takes up much less chlorate than that with sodium hyposulphite; I, therefore, prefer to use H_2S, whenever in a great hurry.

"Almost, but not quite, neutralise the iron and zinc solution with ammonia, add a proper quantity of ammonium chloride—about as much in the aggregate as is used in standardising the potass ferro-cyanide solution for zinc; cool by standing in a large vessel or dish of cold water, add a few drops of bromine water if there is already left not quite a trace of chlorine, which would do to oxidise the manganese, and pour in 20 c.c. ammonia, stir, and let settle for ten or fifteen minutes. Filter and wash with cold water. If the filtrate is perfectly clear it is free of manganese, all of which has been precipitated as binoxide, together with ferric oxide and alumina. But should the filtrate be not quite clear, but growing turbid and cloudy (brownish), as is sometimes the case when much manganese is present, add a few more drops of bromine water, stir, and let stand, say an hour, and the liquid, when filtered, will then be clear. Dissolve the iron oxide on the filter in hot dilute hydrochloric acid into the same No. 5 beaker. In the case of much binoxide of manganese on the filter, add a few drops of Stannon's chloride solution to the dilute hydrochloric acid to accelerate the re-solution. Reduce the iron oxide in this solution with a strong solution of Stannon's chloride (100 grams in 325 c.c. hydrochloric acid and 675 c.c. water) added cautiously and in small portions at intervals until colourless, and still a few more drops added; cool, and, while stirring, pour in all at once 30 c.c. of mercuric chlorite solution (60 grams in one litre of water) and stir again. Titrate with potassium bi-chromate. The precipitate caused by mercuric chloride should be white; if at all dark too much Stannon's chloride has been used, and, in consequence, not all the excess of it has been precipitated by that prescribed quantity of mercuric chloride solution; and, therefore, the operation for iron determination is utterly spoiled. With practice this mis take need not be repeated. This method is quite reliable and satisfactory, and is fast getting popularity with iron and steel chemists. This can be performed in a direct solution of the ore itself in hydrochloric acid.

"Lastly, the filtrate from the hydroxides of iron, alumina and manganese dioxide is acidified with hydrochloric acid and titrated for zinc with potassium ferro-cyanide solution, using uranium acetate as the indicator. After a little practice, one, by noting the appearance of the liquid while stirring with a glass rod, knows how he is approaching the end reaction, and thus does the titration very rapidly. Except for very low zinc, when very near the end of the operation, the whole liquid will appear to be quite full of the white precipitate; that is, one cannot see all through the top or edge of the liquid along the opposite side of the beaker; and also, when zinc is high, toward the end the mass may show a slightly bottle-green colour in the centre when stirred. The lead titration with potassium ferro-cyanide solution has not this advantage of indicating the progress of the work, and so the operator has to be a little more cautious and gradual in adding from the burette.

"The above scheme of analysis applies to nearly all kinds of smelting ores except the feld-spathic and baryta ores. The former have to be fused, so as to get the silica free of alumina, &c. Baryta ores, after treatment with nitric and hydrochloric acids, are converted into sulphates by evaporation with sulphuric acid, and the insoluble sulphates of baryta, lead, and lime are filtered off and treated with ammonia carbonate solution in the cold for twelve hours, with occasional stirring.

Filter and wash. Lead and lime will be present as carbonates, while barium sulphate and silica remain unaltered.

"Dissolve out the lead and lime in hot dilute acetic acid, and separate these by H_2S. Burn the filter now containing barium sulphate and silica, and weigh as such. Fuse with mixed carbonates of soda and potassa, extract with hot water, filter, and wash. Dissolve out the barium carbonate on the filter in hot dilute hydrochloric acid, and determine baryta in this solution with dilute sulphuric acid. Deduct this last weight (as barium sulphate) from the first (barium sulphate and silica) and the difference is silica.

"Manganese and arsenic, which are not very frequently required, are best determined in separate portions of the ore; the former by Volhard's process, which involves the use of zinc oxide and titration with potassium permanganate, and the latter by Pearce's.

"For silica, lime, copper, iron, and zinc, by the above plan, two or three samples of ores can be finished in eight hours. It will be noticed that all of these are estimated volumetrically, except silica. If the total absence of copper is conclusively known, the work may be considerably shortened by omitting the treatment with sulphuretted hydrogen or sodium hyposulphite, and subsequently with potassium chlorate.

"Professor Hand, of Denver University, suggests that aluminium foil can be used to separate copper from zinc in a hydrochloric acid solution, after precipitating iron by ammonia. It is impossible, or very difficult, to get iron-free aluminium cheap enough, and another possible objection is that the iron precipitate may retain more or less of the copper. However, when chemically pure aluminium becomes easily obtainable, it will be exceedingly handy when the determination of zinc alone is wanted."

Outfit for Assaying at the Mines.—*Furnaces.*—The laboratories are generally provided with permanent crucible and muffle furnaces, made of common brick, and placed side by side, as shown in Fig. 180, but very often the two furnaces are separate. By means of the dampers D′ and D′ in the chimney, the assayer can regulate the draught and the intensity of heat in the furnaces. The apertures A B C D are closed by means of sheet-iron plates, easily removed by tongs. Occasionally portable clay furnaces, of American and English manufacture, are used for cupellation.

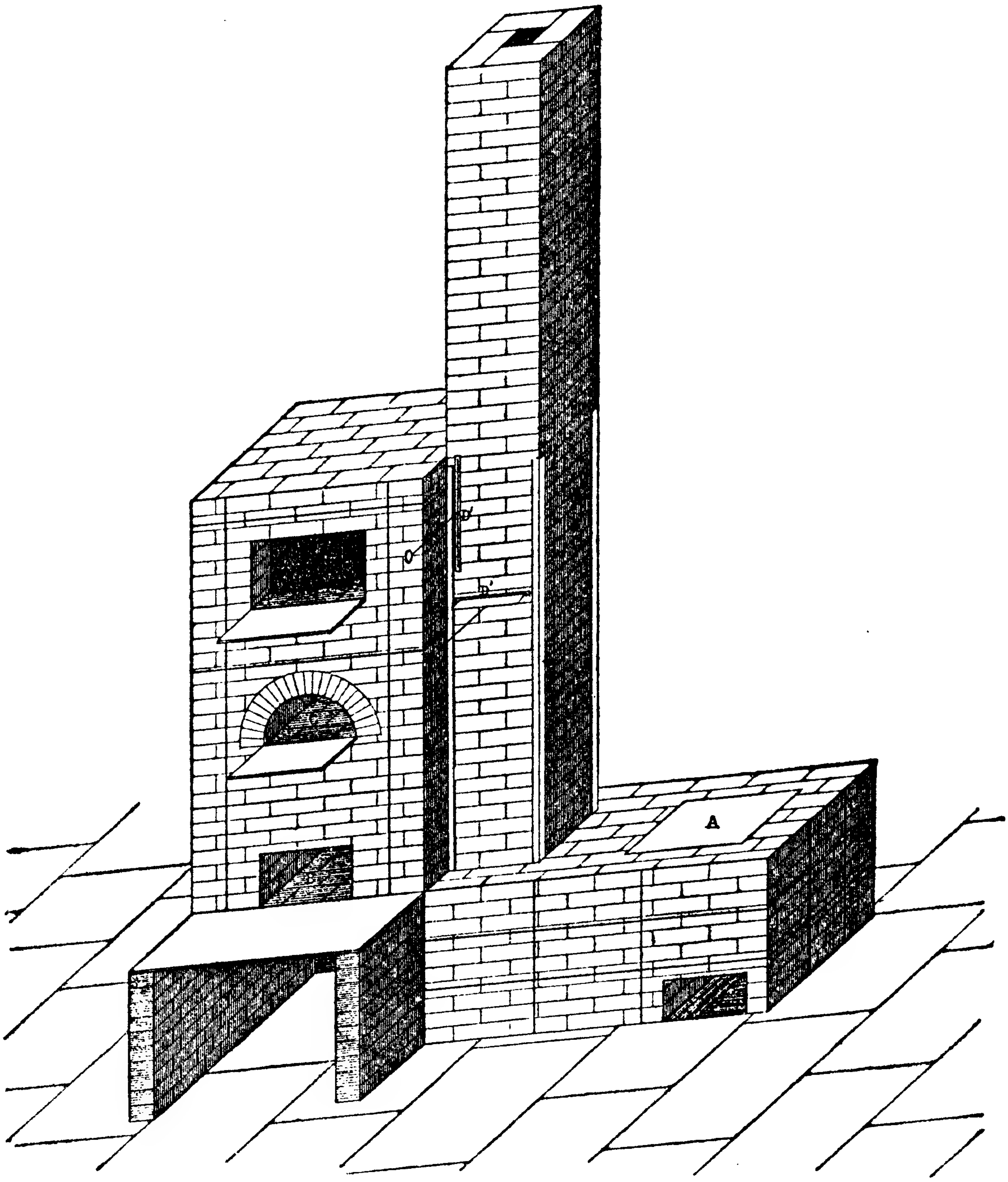

FIG. 180.—ASSAY AND MUFFLE FURNACE.

Pulverisation.—The ores and slags are pounded in a cast-iron mortar, as shown in Fig. 183, and to reduce to a finer state of division are ground on the buck plate, a cast-iron plate (Fig. 181), about 1 inch thick, faced on the side, and provided or not with flanges on each side. The plate rests on a firm table or timber support. The ore is laid on the plate and ground with the bucker. The bucker (Fig. 182) is a mass of cast-iron, with a cylindrical lower surface, faced on the plate side, and fixed to a wooden handle. Grinding is performed by placing the left hand on the bucker, holding the handle in the right hand, and moving the bucker forwards and backwards, at the same time lifting and lowering the handle, and exerting a slight pressure with the left hand. While all this is going on the bucker is also moved from the left to the right side, and inversely, so as to increase the grinding surface. The pulverised ore is then passed through sieves of 70 to 80 meshes to the linear inch.

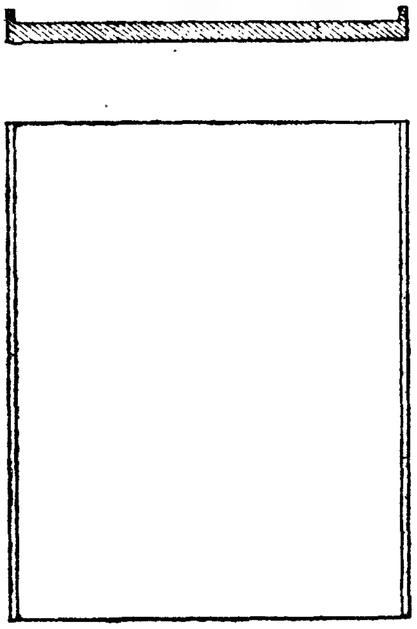

FIG. 181.—BUCK PLATE.

Other appliances required are crucibles, scorifiers, gold annealing cups, cupels, muffles, scorifier tongs, cupel tongs, crucible tongs, raking rods, anvils, hammer, chisel, slag moulds.

Assay offices are provided also with sand-baths, flasks, beakers, dishes, burettes, and a few of the principal re-agents used in assaying by the wet way. Iron and gangue assays are regularly made in the wet way, and occasionally the ore is assayed for sulphur and arsenic, the slags for lead, the ores and fluxes for lime and magnesia.

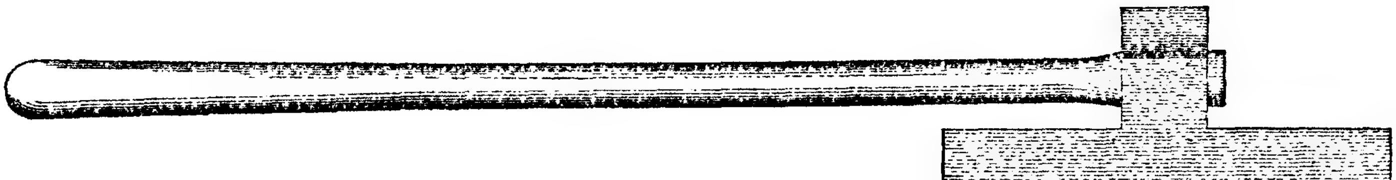

FIG. 182.—BUCKER.

Balances capable of weighing from four pounds to one-sixteenth of an ounce are used for the estimation of moisture in the ore; balances weighing from 100 grams to 1 milligram for the weighing of scorifying and crucible assays; and balances sensitive to the tenth of a milligram for the weighing of silver prills and gold partings.

The weights used in assaying are gramme weights for lead-iron, and gangue assays, and silver prills, or gold partings; but the ore slags and bullion are weighed in assay tons, whose symbol is A. T. or its sub-divisions. The weight boxes contain one-tenth of an assay-ton, or $\frac{1}{10}$ A. T., $\frac{2}{10}$ A. T., $\frac{5}{10}$ A. T., 1 A. T., 2 A. T. Some boxes contain besides $\frac{1}{20}$ A. T. and 5 A. T.

The system of assay ton weights, introduced by Professor C. F. Chandler, of the School of Mines, Columbia College, New York, is as simple as it is ingenious. The ton of 2000 lbs. avoirdupois, is equal to 32,000 ounces avoirdupois, or to 29,166 ounces troy, or to 907,180,000 milligrams. The weight of the assay ton is 29,166 milligrams, consequently each milligram represents one ounce troy, and 29,166 milligrams represent one ton. When the material to be assayed for precious metals is weighed by the assay ton or its multiples, the weight of the precious metals in milligrams, or multiples of the milligram, corresponding to those of the assay ton, expresses in troy ounces the weight of gold or silver contained in one ton of ore or bullion. A few examples will illustrate this:—

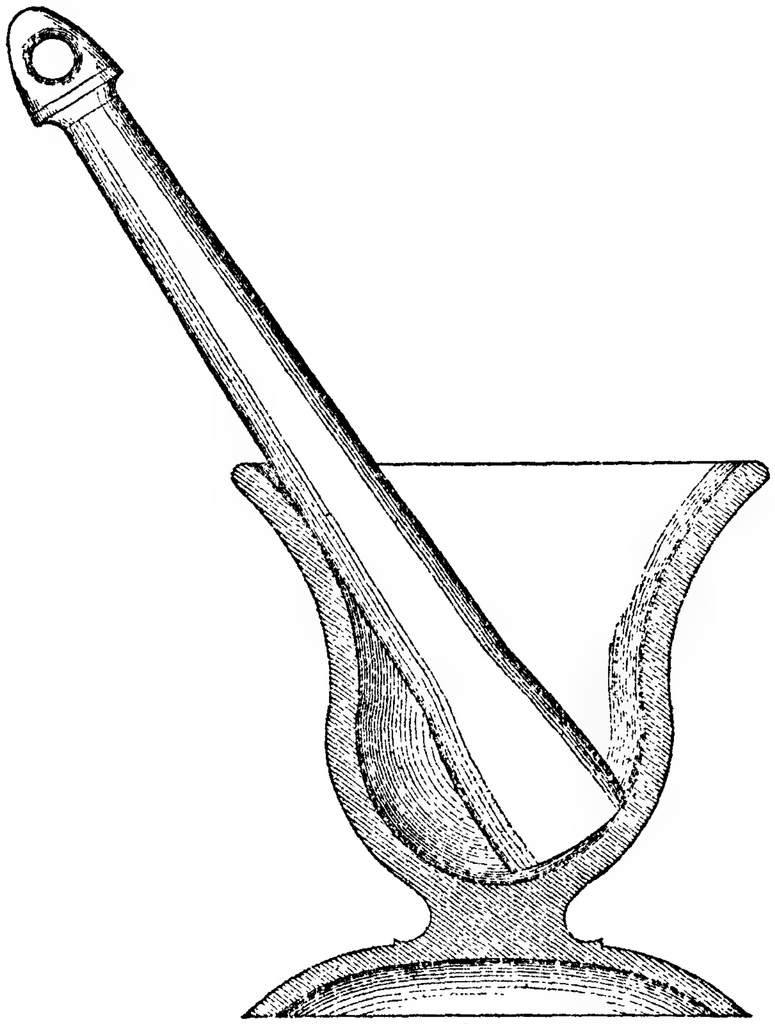

FIG. 183.—PESTLE MORTAR.

(1.) 29,166 milligrams of bullion, or one assay ton, give after cupellation a button of silver weighing 205·5 milligrams. This shows that one ton of this bullion contains 205·5 ounces troy of silver.

(2.) One half an assay ton of slags gives, after assaying, a button weighing 1½ milligrams. This shows that one ton of slag contains 3 ounces troy of silver.

(3.) One-tenth of an assay ton of ore contains 3 milligrams of silver. This shows that one ton of ore assays 30 ounces troy of silver.

APPENDIX.

I.—REPORT ON SMELTING OPERATIONS IN UTAH, BY MR. EILERS.

Most of the lead ores of Utah differ in one particular from those of Nevada, that the prevailing gangue is quartz.* Calcareous ores are, however, also found in considerable quantities. The great bulk of the ores are carbonates and sulphocarbonates of lead, with streaks of galena, varying in silver contents. A large portion of the ores show traces of gold. Of accessory minerals, small quantities of sulphuret of iron, oxide of iron, and clay ironstone may be named.

Previous to smelting the ores are mixed by weight, so as to produce a bullion of a certain standard.

The Utah Silver Mining Company furnace was a circular one of the Piltz pattern, with eight tuyeres of 2-inch nozzle. It is 14 feet high from tuyeres to throat, 3½ feet diameter in the level of the tuyeres, and 5 feet at the top. The hearth forms a hexagon on the outside, and is enclosed by six cast-iron plates 1½ inches in thickness. The two nearest the dam plate are provided with slots for tap holes. The upper part of the furnace, made of brickwork, rests on a cast-iron flange, which is borne by four hollow cast-iron pillars. The part below the flange is of Utah sandstone, 13 inches thick, lined

---

* This report was written before ore deposits had been discovered presenting similar characteristics to those of the deposits worked in Nevada at that period.—M. E.

inside with 4 inches of Pennsylvania fire brick. The motive power comes from a 10-inch cylinder stationary steam-engine, with twenty-five horse-power locomotive boiler. It drives a Brodie crusher and a No. 4 Roots' blower. The efflux pipe of the latter is provided with a safety valve and a wind-gauge, by which the pressure of the blast is measured in inches mercury. An open bulkhead adjoining the ore-floor holds about 30,000 bushels of charcoal.

The manipulations at this furnace do not differ from those anywhere else, only in lighting up the proceedings are a little different. After the hearth is heated up sufficiently, a suitable quantity of lead is introduced through the front; then the furnace is filled up with coal in the usual manner. As soon as the coal has reached to within 5 feet below the throat, slag is charged in portions of 1 lb. of the latter to 1 lb. of charcoal. When the charge is in the level of the throat, the blast is turned on. About 1,000 lbs. of good fusible slag, picked out for that purpose, are fed before commencing with light charges of ore.

While in operation, the ores which come for treatment to this furnace were :—

1. Carbonates of lead, with from 28 to 30 per cent. of quartz, 55 to 60 per cent. of lead, and $22 or £4½ silver per ton.

2. Carbonate ores, with 30 per cent. of quartz, 35 per cent. lead, and about $80 or £16 silver and gold.

3. Ferruginous dry ore from Winnamuck mine, with 38 per cent. silica and alumina, 27 per cent. metallic iron, and $65 silver and gold.

4. Same ore, with 45 per cent. silica and alumina, 23 per cent. metallic iron, and $80 or £16 silver and gold.

Ore No. 1 was the principal ore smelted; occasionally No. 2, which is of the same character, and No. 3 were added; No. 4 was reserved for assorting. The furnace worked well, and without the least difficulty, when the ore was mixed with 40 per cent. of a tolerably pure hematite, 20 per cent. of limestone, and 30 per cent. of slag.

The slag produced was stiff, and resembled a bi-silicate. A decrease in the percentage of slag added to the smelting mixture was always accompanied by evil consequences. The resulting slag in that case was dry, short, and would soon stop running. A diminution of the iron ore and increase of the limestone also worked unfavourably, and the more so the less oxide of iron was in the smelting mixture. Pure silicates of lime cannot be perfectly liquified by the temperature prevailing in a lead furnace.

The tapping is done at these furnaces in the old manner, by piercing the tap-hole with a bar as soon as the lead has risen to the slag-spout. The tap-hole is just high enough above the bottom of the hearth to leave a suitable quantity in the latter. After tapping, the hearth is cleared from cinders and other accretions.

The production of matte is not noteworthy. The normal charge was :—

5 scoops of charcoal, at 1·1 bushels or 18 lbs.	= 90	lbs.
15 shovels of lead ores, at 15 lbs. . .	= 225	,,
6 shovels of ironstone, at 13 lbs. . .	= 78	,,
4 shovels of limestone, at 13 lbs. . .	= 52	,,
3 shovels of slag, at 10·5 lbs. . . .	= 31·5	,,
Total smelting mixture .	386·5	,,

The proportion of coal to smelting mixture is as 4 lbs. to 4·3 lbs., and to ore as 1 lb. to 2·5 lbs.; 1 ton of ore to 48·8 bushels of coal. In 24 hours, under a pressure of from 1½ to 2 inches mercury, 140 charges were run through the furnace, corresponding to 27 tons of smelting mixture, or 15¾ tons of ore, from which resulted 7 tons of lead, carrying between $60 or £12 and $80 or £16 of silver per ton. The lead is shipped to Chicago for parting.

The number of hands required was :—

3 smelters at . .	$5	or	£1	0	0	per day.
6 helpers at . .	$3	or	0	12	0	,,
2 engineers at . .	$4	or	0	16	0	,,
1 blacksmith at .	$3	or	0	12	0	,,
1 coal receiver at .	$2	or	0	8	0	,,
4 roustabouts at .	$2½	or	0	10	0	,,

Three helpers might be saved by providing the furnace with an automatic tap.

The Miller Mining and Smelting Company's Sultana Works. —The works are located near the head of American Fork Cañon, Utah. The ores smelted come from the Miller mine near by, and consist of very ferruginous oxidised ores of lead, containing much galena and very little quartz, too little, in fact, to permit the formation of a fluid slag in smelting the ore alone. This fact, however, was not understood by those running the works in the summer of 1872. The ore contained according to many assays, 40 to 42 ozs. of silver and 0·4 to 0·6 oz. of gold per ton, and 56 per cent. of lead.

All the furnaces are provided with the automatic tap.

Charge. Charcoal, 6 scoops. = 1·8 bushels at 16 lbs. = 28·8 lbs.
Ore, 5 shovels at 20 lbs. = 100 lbs.
Slag, about ¾ shovel, at 16 lbs. = 12 lbs.
—— Total = 112 lbs.
Smelted in 24 hours: 240 charges = 12 tons of ore, or 13·44 tons of charge.
Coal consumed: 432 bushels. = 3·45 tons.
Coal consumed per ton of charge = 32·1 bushels = 513·6 lbs. = 25·68 per cent.
Coal consumed per ton of ore = 36 bushels = 576 lbs. = 28·8 per cent.

The product per furnace at these works in twenty-four hours was 4 to 4·5 tons of lead, containing 85 to 121 (rarely) ozs. of silver, and 1·2 to 1·45 ozs. of gold. This shows an enormous loss of lead and of the precious metals. There are two causes for this, both evident at once to the observer. The first is the flaming top of the furnaces, out of which a roaring bundle of fire issues continually, tearing along great quantities of fine ore and coal, which are deposited in a thick layer on the roof of the smelting building and in the vicinity. The second is the fact that the slag produced is far too basic, thus enveloping metallic lead and matte and preventing separation. There is no matte saved.

The Saturn Works.—These works were situated at Sandy Station, eleven miles south of Salt Lake City. The ores smelted are principally ferruginous carbonates, with some galena, from the Cottonwood Cañons, quartzose carbonates from Bingham Cañon, and occasionally ores from Tintic. There are three small circular furnaces of the Piltz patterns, with four tuyeres, two in the back and one in each side, One Sturtevant blower, driven by steam, supplies the blast, which is kept at a pressure of about 1 inch quicksilver.

Charge. Charcoal, 4 scoops . . = 1·2 bushels at 16 lbs. = 19·2 lbs.

Ore: 3 large shovels at 20 lbs.	60 lbs.
Rawlin's iron ore: 1 shovel	15 ,,
Limestone: ½ shovel	6 ,,
Slag: 1 shovel	15 ,,
	96 lbs.

Smelted in 24 hours: 345 charges = 10·35 tons of ore, or 16·56 tons of charge.
Coal consumed, 414 bushels = 3·32 tons.
,, ,, per ton of charge: 25 bushels = 400 lbs. = 20 per cent.
,, ,, ,, ore: 40 ,, = 640 ,, = 32 ,,

The Bristol and Dagget Works.—This establishment is situated in Bingham Cañon. The ores smelted are very siliceous carbonates containing little iron, and some galena, principally from the Winnamuck mine, on the hillside behind the works. There are two circular Piltz furnaces, 14 feet high above the tuyeres. Their diameter at the level of the tuyeres is 3·5 feet. There are six of the latter with 2½ inch nozzles, lying 10 inches above the slag spout. The blast is supplied by two large Root blowers, and a pressure of 1·5 inches mercury is maintained.

A report for three months from April 1 to June 30, 1872, furnishes the following items:—

Average assay of ore smelted	lead 37·7 per cent. silver, 56·18 ounces per ton.
Smelted: Ore	1,268 tons.
Iron oxide	408 ,,
Limestone	518 ,,
Own slags	208 ,,
Coal consumed, 74,830 bushels =	598·64 tons.

This gives us an average charge as follows:—

Ore	100
Iron oxide	32·16
Limestone	40·86
Own slags	16·43
Total	189·45
Charcoal	47·2

Coal consumed per ton of charge, 31·14 bushels = 498·24 lbs. = 24·9 per cent.

Coal consumed per ton of ore, 59·0 bushels = 944 lbs. = 47·2 per cent.

The product from the above material was:—

Lead	439 951 tons.
Silver	67,478 ounces.

Which would show an apparent loss of—

Lead	7·9 per cent.
Silver	5·3 „

This loss is not very large for western circumstances. The average length of campaigns was from twenty to twenty-two days. There were 14 tons of ore smelted daily in each furnace.

II.—ECONOMICAL RESULTS OF SMELTING IN UTAH,

ACCORDING TO

MR. E. DAGGETT.*

The results hereinafter detailed are based on the use of charcoal; but they are valuable as the careful records of actual experience.

The ore smelted in the Winnamuck furnace, during the year 1872, consisted for the most part of oxidised ores from the Winnamuck mine, only 60 tons of outside ore having been smelted. The latter, like the principal Winnamuck ore, was oxidised, or so-called carbonate ore. There was mixed with those oxidised ores 300 to 400 tons, or 7 to 10 per cent. of galena, some of which was mined with the oxidised ore, while a part was mined separately from the lower portions of the mine, and afterwards mixed with the ore with a view of preventing the formation of deposits of metallic iron in the furnace.

The average assay in silver of all the ore handled was 51·46 ounces per ton, most of it existing as chloride of silver.

The lead contents were 34·98 per cent., all, or nearly all, in the form of carbonate of lead. The relative amount of silver is not at all constant, the best silver ore often being poorest in lead.

The predominant gangue was silica, several determinations of which have been made on representative samples, yielding, in three such samples, 26·38 and 58 per cent. silica—the latter test being ore containing but little lead. The average contents in silica are about 35 per cent., with 6 to 7 per cent. sesquioxide

---

* From "Statistics of Mines and Mining," R. W. Raymond.

of iron and small quantities of alumina and lime. Mechanically, the ore was very fine, and so thoroughly disintegrated that it presented few distinguishing characteristics, rendering sorting or separating of ore from waste difficult, and often impracticable.

Experiments on a small scale have been tried with a view to separate the silica by washing, but these were unsuccessful, as the finest slime, requiring a long time to settle in still water, contained a large amount of silver, and on a careful sizing and washing of the sands and coarser parts, the silver contents were found to be less dependent on specific gravity than is necessary for useful concentration. The lead contained admitted of a certain degree of concentration, but not the silver.

The fluxes used were—iron ore, limestone, and slag. The iron ore used is red hematite from Rawlins, in Wyoming Territory.

Three determinations of the iron ore yielded respectively, 66·5, 67·46, and 68·5 per cent. metallic iron. They were of different samples ; the last of an average sample of a car load or 11 tons. The little silica (3 per cent.) found in one analysis was probably due to dirt intermixed in transit, as the only observable gangue is calcspar. The average may be taken at 67 per cent. iron, 2 per cent. carbonate of lime, and 1 per cent. dirt. The limestone used contained about 6 per cent. silica, and traces of magnesia.

The fuel was almost entirely charcoal, only a few tons of coke having been used near the end of December. Of the 311,996 bushels of charcoal used, 85,000 to 90,000 made from nut pine, or " piñon, " was of good quality, though not equal to coal from hard wood, such as maple, hickory, &c. The remainder was from red and white pine, cedar, and quaking ash, which, however well burned, cannot make a good or even fair fuel, especially when compared with the Connellsville coke lately introduced. It must be understood that this statement is made solely with reference to the comparative melting powers of the two kinds of fuel, and does not take into consideration the possible increased loss in lead and precious metals, due to a much higher temperature, when coke is employed. With regard to the melting power, our work this year proves that one ton of Connellsville coke, weighed into the furnace, is rather more effective than two tons of the charcoal of the country; the cost of the two materials at Bingham being about the same, ton for ton.

In addition to the fact that the soft charcoal lacks in heating power under the most favourable circumstances, there is connected with its use much waste, especially when, as in Bingham Cañon, it must be transported by rail and team for a long distance.

During the year 1872, 3,955 tons of ore were smelted, and the smelting mixture was composed as follows:—

Ore	100·00 parts.
Iron ore	35·19 „
Limestone	38·99 „
Slag	16·16 „

The slag obtained contained from 35 to 48½ per cent. silica. The average of four analyses showed 42 per cent.; but as the analyses were mostly of unusually stiff slag their average is too high.

Professor Brush, of the Sheffield School, Yale College, furnishes the following analysis:—

Silica	37·93
Sulphide of lead	3·75
Sulphide of iron	0·44
Alumina	2·00
Protoxide of iron	30·76
Lime	23·62
Magnesia	·57
	99·07

Although the data are not yet as complete as could be desired, we may approximately calculate the average slag analysis. The ore contained by fire assay about 35 per cent. of lead. Allowing the loss in the fire assay to be two units, we have as actual lead contents 37 per cent., equivalent to:—

Carbonate of lead	47·7
Silica	35·0
Sesquioxide of iron	6·9
	89·6
Alumina, lime, and sulphur	10·4
	100·0

Hence, we have a slag-constituting element in ore and fluxes (except the slag charged, which, being neutral, may be omitted):—

	Silica.	Protoxide of Iron.	Lime.	Other Substances.
In 100 parts of ore	35	6·2		10·4
In 35 parts of iron		30·2		
In 39 parts of limestone	2·3		20·5	
	37·3	36·4	20·5	10·4

Parts in 100:—

Silica	35·6
Protoxide of iron	34·8
Lime	19·6
Alumina, oxide of lead, magnesia, with sulphides of lead and zinc	10·0
	100·0

As will appear below, one of the difficulties encountered in smelting has been the rapid burning out of the fire material, and the question has been frequently asked, why not use less flux to produce a more highly silicated slag and save the fire material of the furnace? The answer to this is, that with the poor fuel in use, a reduction of the quantity of the basic fluxes used caused the smelting to proceed too slowly, so that the increased cost of labour and general expenses per ton of ore more than counter-balanced the saving in flux and fire material.

Indeed, our experience indicates that, with the soft charcoal as fuel, when producing slag containing over 36 per cent. in silica, the consumption of fire material is not materially decreased by increasing the silica-contents of the slag. This may be explained as follows:—The capacity of a slag to dissolve fire material (chiefly silica) depends directly on the temperature and inversely on the amount of silica already contained in the slag. Now, in general, any increase in the silica-contents of a slag of this description necessitates an increase of temperature, and so far as can be determined in the crude operations of a blast furnace, the new conditions counterbalance one another.

By slags much more basic than the above the fire material is more rapidly destroyed.

The furnaces of the Winnamuck Company are two in number, and in dimensions (except height) follow the plan of the first Piltz furnace erected at the Eureka Consolidated Works in Nevada, by C. Von Liebenau in the year 1870. There are, however, some essential points of difference in the construction.

The lower part of the furnace is built of stone which, when properly seasoned, is as lasting as fire brick. About 4 feet above the tuyeres commences the shaft of common brick, cased in sheet iron and lined for 3 feet up with fire brick, and supported by means of a flange upon four hollow iron pillars, rendering it independent of the lower part. Under the hearth is a layer of clay 6 inches in thickness, tamped upon the foundation. The latter, with the six iron plates surrounding the outside of the hearth, should render it impossible for lead to escape into the foundation.

The bottom is made of a mixture of ground clay, raw, and sand, or ground fire brick, just sufficiently damp to pack well, and is renewed or repaired at the end of every run.

The "syphon tap," used in the Winnamuck furnace, is constructed as follows:—There is left in the centre of each side plate, at the height of the hearth-bottom, a round hole, 12 inches in diameter. On whichever side it is desired to have the tap, a piece of $\frac{1}{8}$-inch sheet-iron the height of the plates, 3 feet, and about 5 feet in length, is bent and firmly fastened to the plates at the corners. The space thus inclosed and the channel connecting it, through the hole in the side plates, with the inside of the furnace, are now tamped full of a mixture of sand and clay, during which process a round piece of wood, 2½ or 3 inches in diameter and 3½ feet long, having through its centre a ¾-inch auger hole, is enclosed in the channel. The lead well itself is cut out to the size and shape of a Hessian crucible, rather less than a foot in diameter and about 1½ feet deep.

To provide for any impediment in the passage at any time during a run, a small hole is made in the sheet-iron casing, in the line of the horizontal passage from the lead well into the hearth, through which a bar may be driven to the inside of the furnace, and which afterwards may be stopped with a plug of clay, thus forcing the lead up into the well.

DIMENSIONS OF FURNACE.

Height of plate from foundation	3 ft.
Height of column from foundation	8 ,,
Height of feed-hole from foundation	17 ,, 9 ins.
Height of tuyeres from foundation	3 ,, 8 ,,
Diameter of furnace at tuyeres	3 ,, 6 ,,
Diameter of furnace at feed-hole	5 ,, 3 ,,
Diameter of furnace at top of chimney	3 ,, 6 ,,
Height of tuyere nozzles above slag flow	10 to 11 ins.
Height of tuyere above top of plates	7 ,, 8 ,,
Height of water-tymp iron above slag flow	7 ,, 8 ,,
Diameter of columns at base	8 ,,
Diameter of columns at top	6 ,,
Thickness	½ ,,
Diameter of nozzle	2½ ,,
Height of tuyere above bottom	27 ,,

Number of tuyeres, 6 or 7.

That portion of the furnace above the flange to the feeding floor is cased in ⅛-inch sheet-iron, and above this, for a height of six feet, in thinner sheet-iron.

Operation.—In starting the furnace, which has been thoroughly dried by a slow fire and strongly heated for several hours with coal, the outer lead well is first filled with coal, ignited on top, and a blast from one of the tuyere pipes is forced downward through the coal, driving the flame and heat through the connection into the bottom of the furnace. This rapidly burns away the wooden plug inserted in building or repairing, and heats to redness the sides of the channel. This having been effected, the furnace is filled to the height of five or six feet with coal, and when this is thoroughly ignited, from 20 to 30 bars or 2,400 to 3,600 pounds of lead bullion are introduced through the charging door. This metal, melting and descending through the ignited coal, is received on the hot bottom of the furnace, and filling the channel, rises in the outer well, where it is carefully covered with coal dust. A light blast is now started, and regular charges of six bushels of coal, and, at first, small but constantly increasing quantities of ore and flux are introduced until the furnace is full, when the blast is increased.

The full charge is usually not attained for at least twenty-four hours. Slag, from the starting, is generally saved for reworking, as the greater proportion of fluxes used in the beginning of a run renders the slag more basic than usual. The average length of run during the year was sixteen days; the longest made, with fire-brick or stone, twenty-six days.

In charging the furnace, the coal, six bushels, is first measured in and spread upon the preceding charge; then the proper amount of ore, which has been equalised by spreading in heaps of 100 to 300 tons, is weighed: the corresponding amounts of the various fluxes are added by weight, and the whole mixture thus formed is spread over the coal.

The charge of fuel is maintained at 6 bushels, and the weight of the smelting mixture is varied, as may be rendered necessary by the alteration in slope of the furnace, or by change in the ore.

The products are silver-lead, slag, and a small quantity of iron matte, containing little sulphur, with occasionally metallic iron in small amount. As the limited quantity of matte produced contained only 14 ozs. in silver per ton, nothing has been done with it. When richer, as some was produced containing 40 ozs. of silver, it was saved for subsequent treatment by roasting and re-working with the ore.

Cost.—The cost of smelting Winnamuck ore for the year 1872 was high, mainly on account of the large amount of flux used, and the poor quality and the high price of fuel. Below is given the cost of coal, fluxes, labour, &c. As a part of the cost of coal is included all waste occurring after the coal was delivered at the works; but not the "shortage" or other losses on coal occurring in transit to the works.

COST OF HANDLING 3,954^{91} TONS.

		Totals.	Per Ton Ore.
Charcoal		$96,718·76	$24·45
Iron ore	$34,792·00		8·80
Limestone	7,710·10		1·94
		42,502·10	
Labour		24,269·91	6·13
Other smelting expenses, wood, brick, &c.		10,911·26	2·75
Total smelting cost		$174,402·03	44·09
Mining cost		23,430·17	5·92
General expense		15,133·85	3·82
Sampling, assaying, and bullion charge		4,582·11	1·16
Total cost		$217,548·16	$55·00

To find what portion of the smelting cost is due to the flux used, or, in other words, the difference between actual cost and the cost (at the Winnamuck Works) of smelting an ore or a mixture of ores that would flux itself, we must deduct from the total cost of the fluxes, thus:—

Total cost of smelting	$174,402·03
Less cost of fluxes	42,502·10
Cost of smelting total material, ore, iron, and limestone	$131,899·93
Cost per ton of material (without slag)	$19·14

That is, an ore having the composition of our total material would have been handled for $19·14 per ton, probably a little less, as no deduction is made for cost in handling the flux after it arrives at the works, which is somewhat greater than for the same amount of ore.

The other costs given above on the ore handled were:—mining, which include all prospecting, dead work, &c.; general expenses, or such as belong equally to both mining and smelting (superintendence, office expenses, salaries, &c.), and freight on the bullion to railroads, sampling, assaying, &c. While the above figures represent the actual outlay in money required to produce the given result, yet they do not satisfactorily show the true cost. The losses in lead and silver which go into the slag should also be represented.

Mr. Daggett shows that the loss in silver and lead during smelting amounted to $9·74 per ton of ore treated.

There is also a loss in the treatment of the bullion, a portion of which is eventually recovered by the separating and refining works. As the details of cost and losses in the treatment of bullion are known to the separators and refiners only, it will be sufficient here to regard the aggregate of costs and losses, which may be found thus:—

Weight in tons of bullion produced	$1,232^{741}$
,, ,, the $191,661\frac{4}{10}$ ounces silver contained.	6^{572}
Total amount of lead	$1,226^{169}$
$1,226^{169}$ tons lead at $140 per ton	$171,664·66
$191,661\frac{4}{10}$ ounces silver at $1·46 currency . .	279,825·64
Gross value of bullion at railroad	$\$451,490^{30}$
Net value of bullion at railroad	$353,551^{26}$
Difference, being freight, costs, losses, and profits of separating works	$\$97,939^{.04}$
Bullion expenses, per ton bullion	$79^{.44}$
,, ,, ,, ore	$25^{.00}$

General Condensed Statement of Expenses per Ton of Ore.

Mining expenses	$5·92	
General ,,	3·82	$9·74
Cost of smelting to base bullion	44·09	
Losses in smelting	9·74	53·83
Bullion expenses, freight, and separation	25·00	
Sampling and assaying	1·16	26·16
Total cost per ton.		$89·73

A comparison of costs and losses in milling ores containing little lead in Southern Nevada and smelting ores in Utah, though not strictly conclusive, as the conditions are different, indicates that the advantage usually ascribed to milling is over-estimated.

In a report on the Meadow Valley Mine, of Pioche City, Nevada, made during the latter part of 1871, by Aug. T. Bowie, jun., M.E., it appears that the average production for 1870—71 was $105·34 per ton, being 73·4 per cent. of the total value, in silver:—

Total value silver per ton, therefore (coin)	$143·51
Value of production (coin) per ton	105·34
Loss in silver (coin) per ton	38·17
Total cost, mining, milling, taxes, &c., &c.	44·11
Cost and loss in silver (coin)	$82·28

Reducing this to currency at 113, we have total cost and losses in silver $92·97. To this must be added $1·40 for each unit of lead shown by assay to be in the ore. Assuming the average lead contents of the Meadow Valley ores to have been at that time 10 per cent., we would have total costs and losses $106·97.

If now, in order to institute a comparison, we take from the above sum the increase of cost due to the position of the Meadow Valley Mine, involving higher costs of labour and supplies, we may assume as not exceeding $15 in currency, we have costs and losses in mining and milling Meadow Valley ores in Utah about $92.

The costs and losses in mining and smelting the same ore with lead ores in Utah should not exceed this; and, with the late improvements, such as the use of coke, &c., should be materially less. In general, the question as to the most economical treatment of an ore will be determined only by a careful consideration of all the conditions, such as the nature of the gangue, the lead contents, and the respective losses of the different processes, with the cost of the same—the latter consideration being only one of many—and it may happen that a wasteful process is the best, or that a costly process is the cheapest, that being really the proper treatment which, however wasteful, costly, or even unscientific, enables the owner to make the most money out of his ore.

III.—ON THE HIGH PERCENTAGE OF LIME IN LEAD SHAFT FURNACE SLAGS, BY MR. A. F. SCHNEIDER.

Mr. A. F. Schneider, Mining and Civil Engineer of the Germania Works in Utah, gives the following important information on this subject:—

The peculiar conditions under which lead and silver ores are now smelted in Salt Lake Valley, Utah, render it advantageous to make slags that are siliceous and carry a high percentage of lime. The ores treated come from Utah, Idaho, Montana, and Nevada. Nine-tenths come from Utah. These ores are siliceous, and contain but little fluxing material, the iron present scarcely sufficing for the sulphur and the arsenic. Formerly, ores high in iron were furnished from Cottonwood Cañons; but this supply is meagre. The ores from Montana, Idaho, and Nevada are high grade galenas, more or less impure; generally requiring a large amount of iron for the sulphur, arsenic, and antimony. In the winter and spring of 1880—81, we were treating at the Germania Works principally Bingham Cañon lead ores, and silver ores from Tintic; the former containing from 15 to 30 per cent. of silica, and only from 4 to 5 per cent. of iron (generally as iron pyrites); ranging high in lead, low in silver, and carrying more or less alumina. The lead was present chiefly as carbonate. The silver ores from Tintic contained sulphides, and ran as high as 80 per cent. in silica.

We had been running on a slag approximating—

40	per cent. of	protoxide of iron
20	,, ,,	lime
10	,, ,,	other bases
30	,, ,,	silica

which had been heretofore very satisfactory; but with the class of ores then coming in, it was of the utmost advantage to use less iron and more lime; especially as the iron ore (from 50 to 55 per cent. of iron, and from 5 to 7 per cent. of silica) cost four times as much as the limestone (from 50 to 55 per cent. of lime, and from 3 to 5 per cent. of silica). The large amount of alumina in the slags influenced them for the worse; the addition of lime to the charge helped them; and after many experiments regarding the proportion of protoxide of iron, lime, and silica, a slag approximating—

35 per cent. of protoxide of iron
25 ,, ,, lime
5 ,, ,, other bases
35 ,, ,, silica

seemed to answer our purpose. The percentage of alumina had a marked effect upon the silica in the slag.

Mr. T. S. Austin pursued the matter further, and while cleaning up some scrap-iron that had accumulated at the works, made a slag of the following composition :—

27 per cent. of protoxide of iron
28 ,, ,, lime
8 ,, ,, alumina
34 ,, ,, silica

but concluded that it was slightly too acid and limy, thinking that—

30 per cent. of protoxide of iron
28 ,, ,, lime
33 ,, ,, silica

would work better; this was made the basis for further trials.

The furnaces were then run on slags ranging in composition

From 24 to 28 per cent. of lime
,, 30 ,, 32 ,, ,, protoxide of iron
,, 32 ,, 35 ,, ,, silica
,, 5 ,, 10 ,, ,, alumina.

But for some ores the proportion of lime seemed still too large, and the slags not acid enough. So, starting with

30 per cent. of lime
30 ,, ,, protoxide of iron
35 ,, ,, silica

and changing to

28 per cent. of protoxide of iron
30 ,, ,, lime
36 ,, ,, silica

we settled at last on the proportion of

3 of lime
3 ,, protoxide of iron
4 ,, silica

but with slags ranging from 7 to 12 per cent. of alumina, and from 2 to 4 per cent. of other bases (besides protoxide of iron and lime), the slags were a little too acid for the amount of protoxide of iron present, so that the formula had to be continually modified accordingly. As a general rule the increase in alumina called for an increase in the proportion of lime; hence a slag with

24 per cent. of protoxide of iron
30 ,, ,, lime
34 ,, ,, silica
10 ,, ,, alumina

ran very well.

A trial was made of carrying twice as much lime as protoxide of iron in a slag made from ores containing considerable alumina. The trial was too short to give any definite results; and when the slag was analysed it only showed

35 per cent. of lime
21 ,, ,, protoxide of iron.

The furnace remained open and hot during the experiment.

Many details have been omitted in this sketch, as well as fractions of percentages, as they would not alter the principle. Although the slags varied greatly in the percentages of lime, protoxide of iron, alumina, and silica, yet the ratio between these was quite fixed, and approximated certain types. When normal, the slags approximating the proportion of 7 protoxide of iron, 7 silica, 5 lime, 1 to 1·5 alumina, and those

4 silica
3 protoxide of iron
3 lime
1 alumina

are clean as regards silver and lead, and keep the furnace open and hot; the former driving a little faster, and both using but little more fuel than those high in iron. These slags have a smooth, oily flow, and, even when considerable matte is present, make but little splutter, as they run into the slag pots. They have a distinct crystallisation—the first mentioned, short rhombic prisms; the latter, rhombohedrons. The crystals are black, with a greenish tinge, glassy, well defined, apparently built up, a depression being frequently seen on the plane faces. Any excess or lack in the principal constituents of the slag changes the crystallisation in marked degree, ranging from what might be called pectolitic and stringy to fine granular, non-crystalline, with many gradations between. The presence of alumina has a marked tendency to decrease the percentage of silica and iron, and raise that of lime, so that latterly the slags have approximated from

35 to 36 per cent. of silica
25 to 27 ,, ,, protoxide of iron
26 to 28 ,, ,, lime
10 ,, ,, alumina;

with only from 2 to 3 per cent. of alumina, the slags have run up to 39 per cent. of silica.

The slags are as good metallurgically as they are commercially for Utah. As stated, they contain little or no lead and silver when normal; in practice, about 0·3 per cent. of lead and 0·25 of an ounce of silver per ton when making 100 ounce bullion. The furnaces run well, keep hot and open; the matte and speiss separate completely. Though using a little more fuel than the more fusible slags containing more iron, the advantage of carrying more ore, and less costly flux in the charge makes them more economical.

I have been informed that the Horn Silver Smelting Works is running successfully on siliceous slags very high in lime; the ores treated being siliceous, containing much sulphate of lead, free sulphur, and antimony.

There is one peculiarity about the matte made with these slags; it averages as low in lead, or even lower, but higher in silver, than that made with slag containing more iron and less lime. The amount of matte made with these slags is less than that made with slags high in iron. Taking this latter fact into account with the fact that these slags, as a general thing, come down practically short in lime, notwithstanding the most careful analysis of ores and fluxes, the almost inevitable conclusion is, that sulphide of calcium is formed and goes into the slag. The slags, when analysed, show an excess of lime, though practically the lime is needed: this excess is seemingly due to the sulphide of calcium. The speiss made with these slags seems normal. All kinds of ores are now treated with these slags from impure sulphides to pure carbonates.

It might be well to call attention again to the important part played by alumina. In an abnormal slag made some years ago, there was

20	per	cent.	of silica
15	,,	,,	alumina
25	,,	,,	lime
36	,,	,,	protoxide of iron

and yet the slag ran well and was apparently acid to the eye. Similar shortages in silica were noted in presence of much alumina, but not to so great an extent. The furnace remained hot and open. The almost invariable shortage in silica in presence of large amounts of alumina, and the needed addition of lime, seem to point, perhaps feebly, to the conclusion that alumina, under certain conditions, acts as an acid in slags.

The furnaces are generally run on coke and charcoal, sometimes on coke alone. They are too low for the best working of these slags, being only 11½ ft. from the tuyeres to the charging doors. The furnaces of small cross section in the crucible worked poorly. In a furnace of large section, lately built, these slags worked best; and should the furnace be made considerably higher (or by using hot blast), there seems to be no reason why even a higher percentage of silica and lime should not be used in lead shaft furnaces.

Since the above was wrttten, slags running over 40 per cent. silica, with considerable less protoxide of iron than any of the slags mentioned, have been made to work successfully.

Matte.—At the beginning of the lead smelting industry in the west, this important product was entitely disregarded, and the loss incurred was considerable. For years it was designated as *iron* and thrown among the slag dump. But the increased production of matte, owing to a preponderance of sulphurets over oxides, brought to the mind of the inexperienced Western metallurgist the necessity of beneficiating this material, amounting in individual cases to 50 per cent. of the weight of lead produced.

Mr. Warthenweiler, of the Winnamuck Works in Utah, first began to roast his matte and to use it in the ordinary way in subsequent ore smeltings, as a very welcome flux and other Works followed suit.

All have found that, besides the advantage of extracting the larger part of lead and silver from the matte, there are other very material gains in doing so. Mr. Warthenweiler says that by using the matte he did not only lessen the quantity of costly iron-ore flux from 20 per cent. to 3½ per cent. of the charge, but that also the quantity of fuel used per ton of smelting mixture was very largely reduced. His data permit the calculation of the exact saving in the consumption of fuel, which is 28 per cent. of the quantity formerly used. In other words, while 409 pounds of coke per ton, or 20·4 per cent. of the charge, were used before roasted matte formed a part of the mixture, only 293 pounds per ton, or 14·6 per cent. of the charge, were necessary after the change was made. The total additional cost in rehandling and roasting the matte (portions of it three and four times) is certainly not more than $4 per ton. Eventually, of course, a small fraction of the original bulk remains as argentiferous and often auriferous copper matte, which is not further treated and sold in that shape.

IV.—REPORT ON SILVER LEAD SMELTING AT THE WINNAMUCK SMELTING WORKS,

BY

Mr. A. WARTHENWEILER.

The ores smelted during 1874 came partly from the Winnamuck and the Wahsatch Mines, and partly from various other mines, the latter having been bought, principally, toward the end of the year.

The Winnamuck ore mined during the year, may be divided into two classes, that from the old upper workings of the mine being mostly oxidised carbonate and sulphate of lead; the other, from the lower portion of the mine near water level being a mixture of galena, iron and copper pyrites, and zinc blende. These two classes were carefully kept apart at the mine, in order to facilitate as good and perfect a working of the last-mentioned class as could be done under existing circumstances, *i.e.*, with imperfect appliances, procured at the spur of the moment, and under the pressure of supplying the furnaces with ore as soon as possible. The average assay of sulphuretted ore during the year was, in silver, 55·5 ounces per ton, and 16 per cent. lead; of oxidised ore, in silver, 52·48 ounces, and 23·13 per cent. of lead. The records show, however, great differences in values between the beginning and the end of the year. While in January and February ore with 30 to 35 per cent. of lead and 30 to 50 ounces of silver per ton was smelted, November and December furnished ore, the average contents of which were 15 to 20 per cent. of lead and 50 to 75 ounces of silver. In fact, it has been considered a rule at this mine that the higher the ore assays in silver, the lower is the percentage of lead and the reverse.

Silica and alumina represent the gangue. The average of six different tests show: silica 41·16, sesquioxide of iron 3·99, alumina 8·31, and lime 2·10.

The Winnamuck ore showing a gradual decline in its contents of lead, it became necessary to either purchase another mine containing ore with a high percentage of lead, or to purchase such ores. In January, 1874, the company bought the Wahsatch mine, situated on the eastern slope of the range. For a few months the ore from this mine was of great assistance to the smelting, as it contained 48 to 52 per cent. of lead and 9 to 12 ounces of silver per ton. But 500 tons of such ore, and 240 tons of second class, containing 35 per cent. of lead, exhausted the mine.

Spanish ore, of which there had been about 400 tons lying at the Works for over two years, was next used to make up the deficiency in lead. But although it fulfilled the requirements in this respect, it certainly did not improve the smelting otherwise, as it contained 32½ per cent. silica. A few other small lots were bought, but these, too, were of such a composition as to add only more difficulties to the smelting operations. The amount of flux used during the first eight months of 1874 was enormous, amounting often to 33 per cent. of the ore charge, and consisting of hematite at $18 per ton, and limestone at $4 per ton. Later in the year, after roasting processes had once been thoroughly established, the amount of fluxing material was reduced.

The iron-ore received from Wyoming during the year was of a very inferior character. Up to June it averaged 65·6 per cent. of metallic iron, from June to November only 54.9 per cent. Of late, large cobbles of the hardest flint are intermixed with the hematite. After November, the use of iron-ore in the furnaces was stopped entirely. In its stead "South Star" and "Titus" ores were bought. They are known as probably the most basic ores of the Cottonwoods. Large quantities of roasted ore and matte were used at the same time.

A trial of some Tintic iron-ore was made earlier in the fall, with such limited quantities as to leave the result uncertain.

An analysis of this ore showed 69 per cent. of sesquioxide of iron and 4·2 per cent. of lime.

The principal fuel used was coke, the supply of charcoal being limited and very uncertain. It has, however, been found very advantageous to use some charcoal mixed with the coke. This has, of course, the effect of lightening the column of charges, and of leaving the smelting mixture less packed. It therefore permits a more perfect play of the blast than the use of coke alone, which renders the columns in the furnace so dense that the blast cannot sufficiently penetrate.

The wastage on both coke and charcoal has been tremendous. The charcoal delivered at the Works was mostly soft and spongy, and its calorific effect was, therefore, very unsatisfactory. One-half of it was reloaded from broad gauge railroad cars into narrow gauge cars, and a large amount of fine coal was thus made. Not less than 24 per cent. of waste was measured out during the year.

Two different kinds of coke have been delivered at the works—St. Louis and Connellsville. The supply of the former was stopped early in spring, as it was found unfit for smelting purposes. Pieces of slate from the size of hazel nuts to ten and fifteen pounds weight were picked out from this fuel.

The coke delivered by Morgan & Co., of Pittsburgh, was a very fine article, but when finally laid down at the Winnamuck Works, hard and dense as it was, a waste of from 10 to 12 per cent. would be found. Loading, two or more transfers, unloading, &c., converted a large amount into powder, and tons upon tons have been carted away. Such a loss is hard to bear where the price of the article in question runs up to $35 per ton. To remedy it in some measure, perhaps the only way would be to mix the dust with tar, and to press it into small bricks.

The rapid burning out of the fire material has been encountered by the use of cast-iron water jackets of 3 ft. 6 ins. in height, the inside plates being half-an-inch and the outside one threequarters-of-an-inch thick. The water space is 3 ins. These jackets are made in six sections, answering to the periphery of the furnace. They are held in position by a stout iron band. The first, constructed in 1873, has been replaced by another pattern, principally because the former ones were cast with tuyere and jacket all in one piece. The tuyere projected about 14 ins. into the furnace, and as it was the most exposed part it very soon cracked and was found leaky. This necessarily required the instant removal of the jacket, which, with a furnace in full blast, was an exceedingly ugly job, causing much loss of time. The jackets were, therefore, cast with simply an opening for a tuyere in the centre of each section. By this means two great advantages were gained. First, wrought-iron tuyeres could be used independent of the jacket; aud second, by selecting tuyeres of not less than 20 ins. in length, the section of the furnace at the tuyere line could be changed *ad libitum* at the option of the metallurgist, at any time during a campaign. During a period of seven months after the introduction of this improvement, not one tuyere or water jacket has been found in bad condition.

The furnaces could make campaigns of for sixty to ninety days. Many objections, on theoretical grounds, have been raised to the jackets. But, considering the expenses incurred every month in rebuilding and repairing a brick furnace, the economical advantage in works situated like the Winnamuck is decidedly on the side of the water jackets, even if we admit an increased consumption of fuel. Comparing the records of the previous smelting in fire-brick furnaces with those obtained by smelting with the help of jackets, the increase in fuel used figures up to about $\frac{1}{16}$; and as partially roasted ore and matte was used in the jacketed furnaces, there ought to have been a reduction in the consumption of fuel, so that the increase was above $\frac{1}{16}$.

After two or three days' run of a furnace the inside of the jacket is coated with what might be termed artificial galena, from 4 to 6 ins. thick, preventing the corroding of the iron perfectly, and being a good non-conductor of heat.

Up to the spring of 1874 no attempt was ever made to make use of the large amounts of sulphuretted ore from the lower portion of the mine. In May a small reverberatory furnace was constructed at great expense, caused mainly by costly and difficult excavations. This furnace, roasting only very limited quantities and losing a large portion of the heat in the flues, proved naturally a very expensive experiment. The same difficulties experienced in building the first presenting themselves for any lateral extension of a second furnace, a double hearth reverberatory was constructed; the lower one being at a height of 3 ft. 4 ins. from the ground, and having an area of 9 by 17 ft.; the upper one is worked from a platform and has a roasting surface of 9 by 15 ft. The fire box, built outside and independent of the furnace, delivers its flame over a perforated fire bridge, whence it passes over the ore on the lower hearth, ascends through a narrow flue 6 ft. by 6 ins. in section, and 8 ft. 6 ins. high into the upper hearth, here over another layer of ore, and then turns over the arch of the upper chamber into the flues.

A great saving of labour and fuel has been effected in this manner, the ore coming into the finishing hearth already partially roasted. Whenever a roasted charge is drawn, the whole column of ore passes along the entire length of the two hearths, and another charge is fed in from the top.

The two chambers contain always four charges of one ton each. The entire cost, stack excepted, of this furnace amounted to $1,650. The fuel required for twenty-four hours consisted of 1,400 pounds of coal (lignite), and there were four labourers required to roast 8,000 lbs. of ore. The old reverberatory required the same amount of fuel, and three labourers, who could roast only 5,000 to 6,000 lbs. of the same ore.

All the ore coming from the lower levels of the mine was run along a track directly over the track of the double hearth, and dumped over an iron screen, allowing half-inch pieces to pass. The fine ore falling on the top of the furnace near the feed-hole, rendered the filling-in of a charge a job of only a few minutes' duration. The coarse pieces passed over the screen into a chute, which delivered the ore to a flat below the works to be there roasted in stalls or pits.

Owing to the character of the ore, the roasting of a furnace charge to a point where it is called "dead" was impossible. There might have been a more satisfactory result had all the particles of ore been nearly the same size. As it came to hand, the size varied from dust to half-inch. It was a combination of 25 per cent. galena, 45 per cent. iron and copper pyrites, and 5 to 10 per cent. zinc blende; and whoever has tried to roast such a mixture will understand the difficulty in the way of a quick and, at the same time, good roasting. The consequence was, of course, the formation of a large amount of accretions gathering in the blast furnace, near the feed-hole, in such quantities as to interrupt the campaign. After four or five weeks this mass generally had to be removed by blowing the furnace down partially and breaking the lumps off. The total cost of this imperfect roasting in reverberatories was $5 10 cents per ton of ore, coal costing $12 per ton, and labour $3 50 cents per day.

The pits, or roasting heaps, were put up in the usual manner on a double layer of wood. On eight cords of this there were generally piled about 250 tons of coarse ore; four to six chimneys, consisting of small stacks of wood, having been constructed in the heaps to facilitate the lighting of the heap at the start, and insure a good draught. Such heaps usually burn from two to three months, and were put up at a cost of 75 cents per ton.

The first roasting stalls put up were built of pieces of slag, cemented by a little mortar, and consisted simply of two side walls, 5 ft. 6 in. high, and 18 in. thick, with an inclined floor between. They were used principally for the roasting of matte, receiving at the starting of a fire 1½ cords of wood, and 60 to 70 tons of matte, which burned through in about four weeks. The cost of roasting in these stalls was $1 per ton.

Two covered or arched stalls, having a stack in the centre to carry off the fumes, gave especially satisfactory results. The average cost of construction of the stalls was $58 apiece. An experiment made with a shaft-roasting furnace, with interior fire-place, to be charged at the top and drawn at the bottom, was not very successful. As long as ore was roasted in it, carrying a considerable portion of galena, it did very well; but, with a large amount of pyrites intermixed, the heat was so raised as to bake and sinter the whole contents, which had then to be removed with bars. This proved too expensive, although the furnace did not consume any fuel after being started. When the draught was shut off below, and a number of openings in the side-walls were relied upon to furnish a limited amount of air, the latter could not penetrate to the centre, while the ore remained unaltered.

To obtain a tolerably good product in only one fire, all the roasted ore or matte from heaps, stalls, or kilns had to be picked over, and all the unroasted and partially roasted stuff had to be put back into a second fire.

The average assay of lead-matte (first matte) produced during the year was 12 per cent. of lead and 56 ozs. of silver per ton. By the concentration of this first, produced during a period of three months, about 30 tons of copper matte, containing 12 per cent. copper and 130 ozs. silver per ton, were obtained. This product was sold at about $115 per ton.

Slag assays show during the year an average of 3·68 per cent. lead and 2·41 ozs. silver per ton.

A dust chamber was added to the works in January, 1874, but being of an inferior construction, and, first of all, too small, it never did the services required of such an apparatus, and the saving of flue dust did not amount to even 50 per cent. of the whole. About 110 tons were collected during the year, assaying in silver 24·1 ozs. in lead 26·5 per cent. It seems a very curious phenomenon that the contents in lead of the flue dust should be higher than those of the ore, and this can only be explained by the fact that the ore was mostly in the shape of fine carbonate and sulphate, and that, as the condensing capacity of the chamber was small, the lighter gangue was blown beyond the chamber, while the heavier lead ore particles remained.

An entirely different slag from that produced when iron ore and limestone were the only fluxing materials, was of course, obtained after roasting processes had been thoroughly established.

An analysis made in June, 1874, shows 38 per cent. silica. The following is an average of ore, fluxes, and fuel since the introduction of roasting.

Winnamuck oxidised ore	110 pounds
Winnamuck roasted ore	110 „
Outside ores	180 „
Flue dust	20 „
Iron ore	20 „
Lime	40 „
Slag	80 „
	560
Coke	70 „
Charcoal	1⅕ bushel

Charges before roasted ore was used, early in 1874, were as follows :—

Winnamuck oxidised ore	200 pounds
Wahsatch ore	100 „
Iron ore	90 „
Lime	40 „
Slag	20 „
	450 „
Coke	80 „
Charcoal	1⅕ bushel

It is plainly seen that a great advantage was gained by the introduction of roasting over the former way of smelting. It not only reduced the consumption of costly hematite to a minimum, but there was a decided gain in the use of fuel. The roasted ore and matte imparted such a heat to the entire smelting charge that the weight of charges could be increased by about one-third, and at the same time a reduction of the quantity of fuel was rendered possible.

The average number of charges put through in twenty-four hours was one hundred and five. The quantity of matte produced with such charges was about equal to that of the work lead. This was certainly a very great, but only a temporary loss. About 400 tons of matte were worked over during the year.

The following ores and matte were smelted during 1874 :—

Winnamuck oxidised ore	2,124·76 tons
Winnamuck roasted ore	708·65 „
Winnamuck roasted matte . . .	400·06 „
Wahsatch ore	747·48 „
Ore from different mines . . .	1,699·65 „
Total amount smelted .	5,680·54 „

The consumption of smelting materials is recorded as follows :—

Ore	5,680·54 tons
Iron ore	1,550·59 „
Limestone	909·45 „
Slag	921·78 „
Total material smelted .	9,062·36 „

Of fuel there was used, including shortage and waste :—

Coke	1,723$\frac{23}{100}$ tons
Charcoal	107,521 bushels

The losses of lead and silver can be calculated only approximately, there being still about 130 tons of lead matte on hand, containing 70 to 80 ozs. of silver and 12 per cent. of lead. Leaving this matte out of the question altogether, the losses of silver amount to 14·6 per cent., and of lead to 21·1 per cent. It is clear that, after thoroughly sampling the matte, and giving it its actual value in dollars and cents, these figures will be materially modified.

The total silver-lead production during 1874 amounts to 893 $\frac{601}{1000}$ tons, representing a money value of $\$290{,}706^{66}$.

V.—SMELTING AT THE RICHMOND CONSOLIDATED MINE, EUREKA, NEVADA,

ACCORDING TO

MR. J. S. CURTIS.

The works of the Richmond Company, which are the largest and in some respects the most complete, are situated in the southern part of the town of Eureka, and are connected with the Company's mine, on Ruby Hill, by a narrow-gauge railroad, about three miles in length. The distance to the mine by waggon road is somewhat shorter, as, on account of the difference in elevation between the town and the hill, the railroad could not be built in a straight line. These works have a capacity of from 250 to 300 tons per day, according to the nature of the ore to be reduced. A refinery is connected with these smelting works, in which the furnace lead is calcined and the silver and gold separated from it.

In the smelting department there are four shaft furnaces, with an individual capacity of from 50 to 100 tons of raw ore per day. These furnaces, although they differ slightly in size, are all constructed in nearly the same manner. The portion of the stack above the smelting zone is constructed of ordinary brick and is cylindrical in form. It is supported by cast-iron pillars, which rest on a solid foundation. The smelting zone itself is composed of a water jacket, or rather several water jackets, called "baches," and is oblong in shape. The "baches" are hollow boxes of boiler plate, 30 in. high, 20 in. broad, and 6 in. deep at the top and 4 in. at the bottom. In the centre of each is an opening for a tuyere, which may be a water tuyere or merely a pipe to convey the blast. The water tuyeres are long, and are used at those points where it is necessary to convey the blast for some distance into the charge. The " baches " are inclined a little outward at the top on the upper edge of the crucible or lead well. They are joined to the stack above by a course or two of fire-brick luted with clay. They are fastened to each other on the sides by key-bolts, which can be easily removed in case of an accident, such as the burning through of the iron of the " bache." This arrangement allows the removal of one of these water jackets, and of its replacement by a new one without interference with the working of the furnace.

The " baches " are open at the top, and continually receive a stream of cold water which keeps them cool. The iron comes in direct contact with the charge as in all water jacket furnaces. The furnace has an open hearth at one end with a slag spout as well as one for speiss. The latter is placed 1½ in. below the former. The lead is allowed to run out of an opening on the side of the lead well, which is a very short distance below the speiss spout. When one of the large furnaces is working properly, there is a continuous flow of all the three smelting products, slag, speiss, and lead, from the crucible. The furnaces are barred out regularly once every twelve hours, the front " bache " being removed for that purpose. It is said to have been proved by repeated experiments that the nature of the Eureka ores renders their advantageous smelting in a furnace with a closed hearth impossible, as the large quantity of iron in the ore makes a continual barring out necessary in order to prevent the formation of " sows." The separation of the different smelting products, slag, speiss, and lead, is tolerably complete.

Composition of charge and analysis of slag and speiss.—The analysis of the Richmond ore shows less than 3 per cent. of silica and about 30 per cent. of iron sesquioxide. In order to make a slag with sufficient silica for good smelting, quartzose ores are added, or quartzite, when such ores are not to be obtained. The slag and speiss, analyses of which by Mr. F. Claudet are annexed, resulted from smelting the ore, an analysis of which by the same chemist showed :—

ANALYSIS OF ORE.

Lead oxide	35·65	per cent.	Lead	33·12	per cent.
Copper oxide	0·15	,,	Copper	0·12	,,
Iron protoxide	34·39	,,	Iron	24·07	,,
Zinc oxide	2·37	,,	Zinc	1·89	,,
Manganese oxide	0·13	,,			
Arsenic acid.	6·34	,,	Arsenic	4·13	,,
Antimony	0·25	,,	Antimony	0·25	,,
Sulphuric acid	4·18	,,	Sulphur	1·67	,,
Silica	2·95	,,			
Alumina	0·64	,,			
Lime	1·14	,,			

The material furnished Mr. Claudet is stated to have been the regular daily samples taken throughout an entire year.

SPEISS.

Arsenic	32·95	per cent.
Antimony	0·13	,,
Molybdenum	2·31	,,
Sulphur	3·34	,,
Lead	2·18	,,
Copper	1·06	,,
Iron	57·02	,,
Zinc	0·07	,,
Lime	0·34	,,
Silica	0·23	,,
Silver and gold	0·029	,,

Silver, per ton of 2,000 pounds, 8·01 ozs.; gold, 0·43 oz.

SLAG.

Silica	23·67	per cent.
Iron protoxide	58·32	,,
Alumina	1·64	,,
Lead oxide	3·51	,,
Metallic lead	3·26	,,
Copper oxide	1·08	,,
Zinc oxide	4·44	,,
Manganese oxide	0·23	,,
Molybdenum	0·32	,,
Arsenic	0·25	,,
Sulphur	2·19	,,
Lime	4·78	,,
Magnesia	1·27	,,

Silver 0·58 oz. to the ton of 2,000 pounds; gold, trace.

This speiss contains an unusually small atomic proportion of arsenic, for if the sulphur is supposed to be combined with the metals and arsenic, an arsenide of iron corresponding to the formula Fe_5As_2 remains, whereas in many speisses the arsenide of iron is either Fe_3As_2 or Fe_4As_2.

The analysis of slag shows that it is very basic, and the formula deduced from it is that of a subsilicate. Although this slag is very much more basic than is ordinarily the case where lead ores are profitably smelted, yet the Eureka smelters claim that they obtain better results than they would if the percentage of silica was much increased. The amount of arsenic in the ore, which causes the formation of speiss, without doubt renders the smelting of such basic mixture possible. The flue dust which is collected in long canals with a high stack on the hill-side, is mixed to a thick paste with clay and water in the proportion of one part clay to two parts of dust, is somewhat dried and added to the charge.

Example of a charge.—The following is an example of a charge of one of the furnaces :—

Charcoal	scoops	40
Richmond ore	shovels	50
Ruby Dunderberg (siliceous ore) . .	,,	10
Hoosac slag (siliceous and rich) . .	,,	50
Silver Lick (siliceous ore)	,,	6
Adobe flue dust	,,	4
Speiss	,,	1
Quartz ore	,,	2

The Richmond ore contained three to four per cent. silica. The rest of the silica required for smelting is supplied by the Ruby Dunderberg, Silver Lick, and other more or less quartzose ores, and by the Hoosac slag. The Hoosac slag was a rich slag from the imperfect smelting of lead ore with a quartz gangue. The charge is supposed to contain about the following percentages:—

Ferric oxide	40 per cent.
Silica	20 ,,
Plumbic oxide	22 ,,
Other minerals	18 ,,
	100

The lead from the smelting of Richmond ore does not usually require calcining. Hard lead is refined in large rectangular cast-iron pans which will hold about 14 tons. The time required for softening is from two to four days, according to the quality of the lead.

The Luce and Rozan Process.—The process used in concentrating the silver in the lead is by this process, which is carried on as follows*:—

The principal portions of the apparatus employed are two melting pots, one comparatively large crystallising pot on a lower level, two receivers or moulds below the crystallising pot, and a crane to handle the cakes of lead after they have solidified in the moulds. The uppers pots are provided with covers and the lower one with a hood and pipe to carry off the steam and fumes. There is a pipe by which water is let into the crystalliser above, and one for admitting steam into it below. The steam valve consists of a horizontal pipe which penetrates to the centre of the pot, and within this pipe there is a rod with a button on the end which enters the pot. On screwing the rod in, the button is removed from the end of the pipe and steam is forced into the melted lead through which it is distributed by means of a perforated false bottom throughout the whole mass. The receivers or moulds on each of the crystallisers hold 7,400 lbs. of lead. When the lead is drawn off into these moulds an "eye" is introduced into the melted mass before it cools. In removing these cakes the hook of the crane chain is inserted in the eye, and by means of the steam hoist attached to the crane they are removed from the moulds. When either market or rich lead is drawn from the crystalliser, moulds on two wheels and a peg are placed in a semicircle around the discharge pipe and filled by a movable spout. The cakes are hoisted and placed in the melting pots by the crane.

The first operation consists in melting down 50 tons of lead in one of the pots. This is then drawn off into the crystalliser and water is turned on to chill the lead, because

---

* See also *ante*, p. 294.—M. E.

much time would be required to cool it by radiation. Then steam is admitted, which thoroughly stirs and at the same time completely refines the melted mass. When the crystallisation is completed, which takes place in about one hour from the time the lead is drawn off from the melting pot, about two-thirds of the mass is in the form of crystals assaying 100 ozs. to the ton, and one-third is still melted containing about 460 ozs. This rich lead is drawn off into moulds and taken to the cupel furnaces. In the mean time enough lead of the value of 100 ozs. to the ton has been melted in the second pot, and is allowed to flow into the crystalliser, where it immediately dissolves the crystals of 100 oz. lead. This is now crystallised, giving 75-oz. poor lead and 150-oz. rich lead, which is drawn off as before. The lead is thus crystallised until market lead of about the value of one ounce to the ton is obtained. This requires nine crystallisations, which give lead of approximately the subjoined values :—

LEAD FROM THE CRYSTALLISATION OF 220 OUNCE LEAD.

First crystallisation . .	100 ounces to the ton
Second „ . .	75 „ „
Third „ . .	50 „ „
Fourth „ . .	30 „ „
Fifth „ . .	18 „ „
Sixth „ . .	9 „ „
Seventh „ . .	5 „ „
Eighth „ . .	2·5 „ „
Ninth „ . .	1·25 „ „

It is found that there is no sensible enrichment of the lead after it has reached 550 ozs. (less than two per cent.). The ratio of the gold to the silver in the lead from the smelting furnaces is about 1 to 32 by weight, or in value about $1 gold to $2 silver.

The use of steam in this process appears highly advantageous. The stirring produced is probably more thorough than that accomplished by machinery. The steam is also in part decomposed at the temperature maintained, and thus accomplishes a very considerable refinement of the lead during the process, producing an excellent market lead from comparatively hard bullion.

The rich lead is subjected to cupellation in English cupelling furnaces with bone ash hearth giving *doré* silver, 965 fine silver and 30 fine in gold. The poor litharge, containing about an ounce to the ton, is reduced to market lead in reverberatory furnaces, with refuse charcoal from the bins. The rich litharge, containing as high as 75 ozs., is resmelted with a furnace charge, as there is almost always a dearth of lead in the ores.

VI.—SMELTING CONCENTRATED TAILINGS AT TOMBSTONE, ARIZONA,

ACCORDING TO

MR. T. A. CHURCH.

In my work on the "Metallurgy of Silver" (page 103) I have given a description of the apparatus employed at Tombstone for the concentration of the tailings, which carried over 3 per cent. of oxidised lead ores. Mr. Church gives the following account of his smelting operations with the concentrations:—

"The furnace work presented many interesting features. On account of the sandy and even dusty condition of the concentrates they were made into bricks, at first by hand, and afterwards by a brick machine. No clay was obtainable, but the pan slimes supplied a good binding material, though they contained about 85 per cent. of quartz and only 2 to 3 per cent. of clay, the remainder being calcite, manganese, and iron oxides, various sulphides, and lead carbonate. The binding quality was due entirely to their extreme fineness and the trituration they had received in the amalgamating pans.

"For flux there was no resort but to manganese ore, which contained as much lime as the charge would bear. The furnace was an open-topped shaft about 11 ft. high, and connected with iron dust chambers, which ended in an iron chimney 80 ft. high and 40 ins. in diameter. The furnace was water-cooled with syphon lead tap, and did not vary from the usual types of American lead furnaces, except that the water jackets were of wrought iron and built up from channel iron and plates of soft charcoal iron. The channel irons, 4½ ins. wide, formed the edges, and the inside plate was riveted on, the outer plate being put on with patch bolts. Cast-iron jackets were used at first, but burned out or cracked uniformly near the top. The fuel was Colorado coke sometimes with English patent coke added. Charcoal was avoided, except in blowing in. It was very poor in quality, and, like all other materials, high in price. At times the coke was of the worst description.

"When the furnace started there was no lead available for filling the hearth, and the start was made on concentrates that were especially well cleaned for the purpose. The easy reduction of the lead carbonate made this method perfectly practicable, and no trouble was experienced from this cause. Manganese as a flux also proved to be entirely available, but it presented two peculiarities. The fluidity of the slag allowed less fusible impurities to settle rapidly and completely out of it, and the furnace would accumulate crusts in the hearth with great suddenness. This tendency was increased by the absence of matte-forming materials. The sulphide of manganese is dissociated readily by heat, and the small quantity of iron, copper, nickel, and antimony present were just sufficient to make a speiss with the arsenic present. Usually the speiss ran out with the slag; but if anything occurred to stop the flow of materials through the hearth, even for a short time, a crust was almost sure to form, and once formed, it was hard to melt it.

"The furnace was run in every way possible in order to ascertain the best mode of utilising the manganese. When the charge was strongly basic the furnace would melt 50 to 55 tons a day, but there was a strong tendency to accumulate crusts. With a more acid charge the work was much more regular, and the furnace melted about 40 tons a day. Though the composition of the slag varied daily, owing to the unfavourable conditions for fluxing, the slags were always very clean and remarkably free from combined lead and silver. Their extreme fluidity and the tenacity with which manganese retains its oxygen, and the readiness with which it gives up sulphur, are probably the causes which contribute to this freedom from lead. The experience obtained indicated that manganese would form an excellent flux in matting furnaces.

"The composition of the slags varied so constantly that no representative analysis can be given. Their only striking characteristic was their high proportion of manganese, and an analysis made for Dr. M. W. Iles is perhaps the most interesting. It was—

Silver	trace
Lead	1·40
SiO_2	29·60
FeO	11·56
CaO	7·50
MnO	43·25
Al_2O_3	6·34
MgO	trace
	99·65

"The work done in the first two years is shown in the following tables, the work of the first year covering only six months of actual service.

SEPTEMBER, 1882, TO MARCH 31ST, 1883.

	Tons.		Percentage of Charge.	
Concentrates	438·00	—	23·65	
Tailings	438·00	—	23·65	
Ore	47·92	—	2·70	
Manganese	625·25	—	33·80	
Total Silver-bearing material	—	1,549·17	—	83·80
Limestone	33·02	—	1·80	
Slag recharged	260·80	—	14·40	
Cleanings recharged	6·00	—		
Total fluxes	—	299·82	—	16·20
				100·00
Colorado coke	168·17			
English coke	81·00			
Charcoal	67·84	317·01	—	17·15
Total material	2,166·00			

PRODUCT.

Number of bars	2,708·00
Tons of bullion	144·88
Containing silver, ounces	54,538·37
Containing gold, ounces	332·81
Containing lead, tons	144·44

APRIL 1ST, 1883, TO MARCH 31ST, 1884.

		Materials used.		Per-centage of charges	Total.
		Tons per charge.	Total Tons.		
Days run	279				
Number of charges	21,829				
Weight of charge	—	0·390	8,512·152		
Concentrates, slums and flue dust	—	0·137	2,999·000	35·2	
Ore	—	0·052	1,130·082	13·2	
Manganese	—	0·161	3,511·000	41·2	
Limestone	—	0·006	124·070	01·4	
Slag and cleanings	—	0·034	748·000	09·2	100.2
American coke	—	—	1,269·180		
English coke	—	—	464·000		
Charcoal	—	—	52·400	—	21·329

PRODUCT.

Number of bars	11,851·0
Shipments, tons	654·470
Containing silver, ounces	193,560·7
Containing gold, ounces	1,178·6
Containing lead, tons	645·84."

VII.—SMELTING OPERATIONS AT FREIBERG, BY THE ROASTING REDUCTION PROCESS,

ACCORDING TO

Mr. C. MERBACH.*

In Freiberg the ores undergo a preliminary preparation before being submitted to the smelting process. They are divided according to their character into several classes: *(a)* Quartzose and spathic ores; *(b)* Pyritic ores; *(c)* Lead ores; *(d)* Cupriferous ores; *(e)* Arsenical ores; *(f)* Zinc ores. Their preparation is carried out as follows:—

All ores containing 25 and over per cent. of sulphur, as long as they do not contain 10 per cent. and over of arsenic, are submitted to a desulphurising roasting first in the sulphuric acid works where the lump ores are burnt in the kilns, the finer are roasted in Gerstenhofer's furnace, and the sulphurous acid fumes are conducted into lead chambers.

Ores containing over 10 to 15 per cent. of arsenic and 30 to 35 per cent. of sulphur (a mixture of argentiferous iron pyrites and arseniurets) are delivered first to the arsenic works, where the greatest portion of the arsenic is obtained, and a portion of the sulphur and the residues given over to the sulphuric acid works for further desulphurisation.

The zinciferous ores are also roasted down, first in the sulphuric acid works till there is about 6 per cent. of sulphur left in them, and then submitted to a dead roast in the Fortschauflungsofen, and the roasted material given over to the

---

* "Berg & Huttenwesen," Freiberg, 1883.

zinc works, and the argentiferous residues given over to the lead smelter.

All other ores are delivered to the ore beds, where they are thoroughly mixed with the above prepared material and submitted in another Fortschauflungsofen to a slagging roasting. These furnaces are 13·2 meters in length, 3·25 meters wide, have a fire-place 3 × 0·54 meters and the fire bridge is 80 centimeters high. Seven such furnaces roast daily 900 cwt. ore, one such furnace turning out daily 130 cwt.

The sintered ore is drawn into iron cars, then broken into small lumps, and with the addition of slags and roasted iron pyrites, smelted in round cupolas.

There are at Freiberg one six-sided (hexagonal) and four eight-sided (octagonal) furnaces ; they are 5·2 to 8·5 meters high, 1 to 1·5 meters in diameter at the tuyere level, and at the charge opening they are from 1·25 to 2 meters in diameter. They are built up with from four to eight wrought-iron water jackets in the smelting zone, whereby campaigns lasting from three to four years have been obtained. One of these furnaces was capable of smelting in 24 hours:

Roasted ores	225 cwt.	225 cwt.
Residues from arsenic works	25 ,,	
Slags from same works	225 ,,	225 ,,
Lead fluxes	—	6 ,,

but occasionally the capacity of these furnaces was raised to 300 to 350 cwt. ore in 24 hours, and a comparative increase of slags, with a consumption of 55 cwt. coke. With an average lead content of the charge of 18 per cent. there were produced from 70 to 80 cwt. lead in 24 hours, with a wind pressure of 30 to 36 mm. quicksilver there were smelted daily 80 to 90 charges, a 50 kilograms coke and 3 cwt. ore with 3 cwt. slags.

Schertel determined that the smelting temperature of the slag produced was 1,030° C. and the same had the following composition :—

SiO_2	23·95
S	4·46
PbO	2·87
CuO	0·86
FeO	44·41
MnO	0·92
QnO	14·81
Al_2O_3	4·45
CaO	4·75
MgO	0·54
	102·02
Deduct for the oxygen equivalent of S	2·23
	99·79

The matte formed during the smelting is roasted in kilns, and the product further burned in stalls and then mixed with slags and siliceous stones, smelted in round furnaces for its lead, and matte produced again, and any copper in the ore is concentrated in the matte, whereas any lead and silver are separated as such.

In working slags and matte the following quantities were passed through the surface in 24 hours :—

Blast furnace slags	425	cwt.
Roasted lead ores	90	„
Lead fluxes, skimmings, &c.	22·5	„

The slags resulting from these smeltings contained often up to 20 per cent. of zinc oxide, and only 1½ to 2 per cent. lead with 0·0015 per cent. silver, and such slags were run into moulds which formed them into bricks, to be utilised for building purposes.

VIII.—ON THE TREATMENT OF COMPLEX ZINC ORES BY SMELTING.

(DR. PERCY AND MR. F. L. BARTLETT.)

It has been previously pointed out (*ante*, p. 48) that the smelting of ores containing zinc is found very troublesome. This difficulty has received the attention of many able metallurgists, who have tried to solve the problem in a practical manner by the introduction of various processes, many of them patented; but the fact remains that no universal method has yet been discovered for separating and eliminating the zinc without a heavy loss of the precious metals, which it is the aim of metallurgists to recover as closely as possible either by amalgamating, leaching, or smelting.

When smelting ores containing zinc are brought into the market, they do not command the same price as ores free from that obnoxious metal. The action of sulphide of zinc, or blende, during the smelting reactions has been fully discussed in existing works, and Dr. Percy in his "Metallurgy of Lead" (pages 484, 485), gives a résumé of the views of the most eminent authorities on this subject. "According to Professor Kerl," he says, "the presence of zinc blende favours calcination, by acting as a stiffening ingredient (Ansteifungsmittel) so keeping the mass open, thereby facilitating access of air, and enabling the charge to 'stand fire.' Both elements of any of this sulphide remaining unchanged after calcination would be oxidised in the second or melting down stage by contact with the oxidised products of lead, with the formation of sulphurous acid and oxide of zinc, and separation of metallic lead. Some of the oxide of zinc in the calcined ore would be reduced in the blast furnace; and it is asserted that the escaping vapour of the metal would greatly promote the volatilisation both of lead and silver. Any of this oxide which might escape reduction would enter the slag, and tend to render it less fusible. Unchanged sulphide of zinc would in part pass into the regulus, if regulus be formed, and in part remain entangled in the slag, rendering both more refractory; but by contact with metallic iron the sulphide would be decomposed, zinc being set free and sulphide of iron generated. The evil of a too refractory slag from the presence of silicate of zinc or intermingled sulphide of zinc may be counteracted by the addition of fusible slag, which, of course, implies increased consumption of fuel and prolongation of the process of smelting.

"Rivot asserts that 'blende is partially decomposed in the upper part of the blast furnace by the action of the vapour of water.' But, it may be asked," Dr. Percy says, "whence comes this vapour of water? It might be supposed that the moisture in the air, which is blown into the lower part of the furnace, would be quickly and wholly decomposed in its ascent through a column of highly incandescent carbonaceous matter; and that any moisture in the solid materials introduced into the furnace would be expelled and escape upwards, before descending to that zone, where the temperature would suffice to cause the reaction between it and sulphide of zinc.

"With respect to the iron reduction process, Gruner states that if sulphide of zinc should descend to the region of the tuyeres, and there come in contact with metallic iron, it would be attacked by the latter, and the resulting vapour of zinc would be again sulphurised or oxidised in the upper part of the furnace by galena or carbonic acid, and so enter upon an endless circuit, except that which might escape oxidation, and which would be evolved from the mouth of the furnace.

"But is it certain that such oxidation would take place where any carbonic acid that might occur would necessarily be associated with a large quantity of carbonic oxide? Gruner maintains that the so-called method of reaction is preferable to the iron reduction process, when galena mixed with blende is smelted, because in the former the zinc in vapour would carry off lead, while in the latter the whole of the blende would be oxidised and the resulting oxide of zinc would pass into the slag. He concludes that the iron reduction process is 'rarely advantageous, even when oxidised ferruginous matters are employed as the source of the iron; that it is neither suitable for argentiferous galenas, pure galenas, nor blendic galenas; that the only case in which its use seems rational is that of quartzose or coppery galena, which is but slightly argentiferous; and that even then, when the ore is mixed with pyrites, it is better to adopt the method of calcining and reduction by deoxidation.'"

Mr. F. L. Bartlett,* in a discussion on the treatment of complex zinc ores expresses his views as follows:—

"After a series of experiments on the large working scale, covering more than ten years of time, and including both the wet and dry processes, I have come to the conclusion that to effect the saving of the gold and silver in zinciferous ores, separation of the zinc must be made before the sulphur is wholly removed from the ore, in the dry way, and so far, no wet process has yet been discovered which is practical in the large way, and is cheap enough to be of utility.

"About the only other method for the removal of zinc from its ores is by sublimation. In the presence of carbon zinc can be wholly removed by volatilisation; this is an old but very practical method, and by some modifications the author has been able to carry on the process with little loss of silver, and with nearly complete saving of the zinc and lead.

"Before describing the process it may be stated that the ores intended to be treated by this method are those low grade zinciferous ores containing too little lead and silver to render treatment by the usual methods profitable. Such ores contain from 20 to 40 per cent. of zinc with from 10 to 15 ounces of silver. They may contain, and usually do, some gold and copper. The lead content is below 10 per cent., while sulphur is present to the amount of from 25 to 40 per cent.

"An ore containing 30 per cent. of zinc, 5 to 8 per cent. of lead, and 10 ounces of silver, with the usual filling of iron pyrites, is a fair representation of the class of ores the author

---

* See *Engineering and Mining Journal, Aug.* 3, 1889.

aims to treat. The actual metal value of such an ore is high, provided all the metallic contents could be saved; such an ore, for instance, figures up to no less than 43 dollars per ton. There is, too, more or less gold and copper always to be found in such ore, not included in the above estimate. Notwithstanding that such an ore figures up so well, there is not a smelter in the country to-day who would purchase it. On account of the lead it is not fit to make spelter, and on account of its zinc it is about worthless for extracting the other metals. Concentration on this class of ores rarely succeeds, because the lead and blende are too intimately mixed and the specific gravity of the two is too nearly equal. Such ores can be smelted by deluging them with other ores which do not contain zinc, but even then the zinc is a nuisance, and causes loss of silver, besides deranging the furnace and fouling the slags. It is evident that in order to treat such ores profitably the zinc, lead, and silver must be saved, and that the ore must be treated by itself, without much admixture of other ores.

"If the ore, like the one described, is roasted and mixed with carbon, and the zinc driven off, a heavy loss of silver results. This loss of silver may result from being mechanically carried off, or it may be actually volatilised as an oxide. In the case of smelting in the ordinary blast furnace, the zinc must be mostly forced into the slag, else there is a bad loss of lead as well as silver; this fouls the slag, forms hard crusts around the top of the furnaces, makes an extra amount of matte, and is, generally speaking, a nuisance of the first water.

"In the system about to be described the aim has been to accomplish three things: first, the treatment of the ore in the raw state by the use of cheap fuel; second, separation of the zinc and lead without loss of the silver and gold; third, the utilisation of the lead and zinc fume. It is plain that once the zinc is removed from the ore the treatment of the residue offers no trouble. Moreover, when the zinc, lead, and most of the sulphur are removed, the ore has lost nearly one half in weight; consequently the silver and gold contents are raised in proportion.

"In working ores containing 25 per cent. of zinc and above, and especially on ores containing little silica (such ores, for instance, as the heavy zinc sulphuret ores of Leadville, Colorado), the ore is taken raw, crushed to about No. 16 size, mixed with about 75 per cent. of its weight of any kind of cheap fuel, fine coal, or coal 'culm,' sawdust, petroleum residues and the like. It is also necessary that the fuel shall be in a fine state of division. The mixture is then blown up on a special grate in a furnace suitably provided with an air blast until the zinc and lead is nearly all volatilised. In order to retain the silver there must be a certain relation between the percentage of the sulphur and zinc. Small amounts of other ores are used, in accordance with the analysis of the ore being treated; then so long as the zinc is not entirely driven off, the silver remains. When there is not sulphur enough present in the ore it must be added in the form of iron or copper pyrites or sulphates.

"Special air holes must be provided in the furnace for admitting air just above the layer of ore, which is from four to six inches thick, and the amount of air admitted must be under control. The zinc and lead is easily sublimed, and passes off in the form of fume, which is composed of mixed sulphites and sulphides of lead and zinc. The non-volatile metals, as copper, iron, silver, and gold, with some sulphur, melt down and form a slag or scoria, which, in this condition, is easily treated by the usual blast furnace process. The fume is caught in bags in the usual manner, and is subjected to a second treatment.

"Ores containing much silica and gangue, and when containing not above 22 per cent. of zinc, are treated differently. Such ores being worked off in the raw state in a furnace which is a combination of reduction and scorifying principles. The ore is mixed with enough flux to make a thin slag of the siliceous contents. It is then blown up on a closed hearth in a low water-jacketed furnace containing two rows of tuyeres on each side; the upper row being about ten inches above the lower. The lower blast is supplied under a pressure of about two pounds to the square inch, and is preferably a hot blast. The upper blast is cold and run under a light pressure. The ore and fuel are fed in together continuously in a thin layer, not exceeding twelve inches in depth. By the united action of the two blasts the zinc and lead are quickly driven off, and the charge melts and forms a scorifying bath in the bottom of the furnace composed of a layer of matte and slag. The sharp lower blast blows into the bath and rapidly oxidises and drives off the last traces of lead, and pretty nearly all the zinc. The bath is tapped each half hour, and the matte separated by an outside well in the usual way. In short, this practice is nothing more or less than a mild type of 'bessemerizing,' where advantage is taken of the combustion of the sulphur, although the application is different, and melting and scorifying go on at the same time. No difficulty is found in running such a charge provided always that no excess of air is admitted through the bottom tuyeres. These tuyeres are provided with valves for adjusting the size of the opening, which is in the form of a narrow slit of considerable length. Any excess of air blown in at the bottom causes chilling, and must be avoided. For fuel a mixture of coke and waste coal screenings is used, amounting to one-fourth the weight of the ore. No fine stuff whatever is blown over. The fume is the same, and is collected the same as in the first case mentioned. The matte produced contains the non-volatile metals, and is treated by second smelting with lead ores. The amount of matte produced is about one ton to six of the ore.

"To illustrate the scorifying and desulphurising action of the process, the writer will say that he has been able to easily bring up a copper matte of 20 per cent. to 60 or 70 per cent. by a single treatment. In treating mattes the same process is followed as has been described. The only difficulty found, and the only impediment to bringing up a copper matte to the metallic condition, is that it is so easily fusible that the bath must be tapped very frequently, thus limiting the time for oxidation.

"One of the most remarkable things about the process is the completeness of the sublimation of the lead. In treating ores containing 9 per cent. of lead, no trace of lead will be found in either the slag or the matte."

IX.—MR. GUYARD'S CONCLUSIONS
REGARDING
SMELTING OPERATIONS AT LEADVILLE.*

(1). That smelting in Leadville is a profitable operation, but that the aggregate smelting capacity of the working smelters is about equal to the present mining products of the camp.

(2). That lead smelting in Leadville has, on the whole, been brought to a state of great perfection with regard both to the plant adopted, which is constructed on the most approved principles, and to the manner in which fuel, fluxes, and ores are mixed for smelting, giving slags which are remarkable for their fluidity and not too highly-charged with either silver or lead (especially when it is remarked that the bullion produced is very rich), and from which by-products, such as speiss and matte, are easily detached.

(3). That the quantity of by-products, other than lead fumes, resulting from smelting in Leadville, amounts to but little.

(4). That the camp is provided with the necessary plant to work profitably such by-products as are generally rich in silver, and either completely neglected or treated imperfectly, and with a considerable loss of silver.

---

* "Mining Industry of Leadville, Colorado."

(5). That the mode adopted at a great many smelters of mixing and re-smelting with caustic lime the chamber dust, formed in considerable quantity, is the best that could have been devised, and that it would be advisable to substitute pure lime, or the dolomite lime used in Leadville for this operation.

(6). That the numerous imperfections noticeable at various smelters are mostly intentional and based on economical grounds, and not on ignorance, for smelting is conducted in Leadville by very clever superintendents and smelters.

(7). That the smelting of lead ores in the presence of ironstone has here been brought to a state of great practical perfection, and is carried on most successfully from one year's end to the other with the greatest regularity at a dozen smelters, and that superintendents of smelters do not hesitate to introduce in the charges sometimes very large quantities of galenas, which are reduced with the greatest facility.

(8). That, owing to the peculiar nature of the Leadville ores and to the great altitude at which smelting is performed, which increases the volatility of lead compounds, attempts ought to be made to substitute caustic lime free from magnesia for the raw dolomite used in Leadville, in order to avoid as much as possible the formation of lead compounds.

(9). That—*caeteris paribus*—dolomite forms as good a flux as calcitic limestone, so far as the actual working of the blast furnaces is concerned, and that the fluidity of the slag thus formed is not only irreproachable but quite remarkable.

(10). That, besides the substances existing in large quantities in the camp, such as silica, sulphur, carbonic acid, lime, magnesia, alumina, oxides of iron and manganese, lead, silver, chlorine, and phosphoric acid, the following substances exist in small quantities : Sulphuric acid, titanic acid, bromine, iodine, zinc, baryta, gold, nickel, molybdenum, arsenic, antimony, and copper; and that traces of the following substances may be detected: Tin, bismuth, cobalt, indium, selenium, tellurium, cadmium, and a new metal which has been imperfectly studied as yet, and which appears to be intermediate between the metals of the iron group and those of the lead group.

(11). That the ores of Leadville are either rich in lead and poor in silver, rich in silver and poor in lead, or equally rich in both lead and silver, and very variable in composition; but that, by judicious admixture of various ores, ore beds of sensibly the same composition are made at the smelters, which are needed to insure regularity in the smelting operations.

(12). That the quantity of lead completely lost in the atmosphere is sensibly twice as large as the quantity of lead caught in the dust chambers generally used.

(13). That the bullion extracted in the blast furnaces of Leadville is of a very fair quality, and that a little of its silver and some of its lead exist there in the state of sulphides.

(14). That mattes (both iron and lead mattes) which had hitherto been considered as entirely formed of sulphides, are crystallographic compounds of sulphides of iron and lead and crystallised magnetic oxide of iron. (This last observation, however, interferes in no way with the fact that in various smelting operations mattes entirely formed of sulphides are produced.)

(15). That slags cannot very well be compared with minerals, from which they differ essentially; that they contain minute quantities of carbon or carburets, two products which hitherto had not been generally known to exist. That slags are formed of crystallographic compounds of silicates of iron, manganese, zinc, lead, lime, and magnesia on the one hand, and on the other of a peculiar matte which is designated by the name of calcium matte, and which, like its congeners, is formed of a sulphide (sulphide of calcium) and of magnetic oxide of iron which can be isolated in the pure crystalline state.

(16). That at least three distinct metallurgical kinds of speiss, containing two distinct chemical arsenio-sulphurets of iron, are formed in lead smelting; and that they always contain small quantities of nickel and molybdenum entirely concentrated in them, showing that the metallurgy of molybdenum could be conducted jointly with that of lead with ores containing only traces of molybdenum.

(17). That a very curious and a hitherto unsuspected reaction takes place in the blast furnaces of Leadville, by means of which cobalt is completely separated from nickel (nickel being concentrated in speiss and cobalt in the skimmings of the lead pots of blast furnaces), and showing that the metallurgy of both metals and their separation could be effected in lead furnaces by operating under conditions similar to those observed in Leadville.

(18). That iron sows are a variety of speiss and present a great analogy with the latter products.

(19). That lead fumes are very complicated products, characterised in Leadville by the presence of no inconsiderable amount of chloro-bromo-iodide of lead and phosphate of lead, and that they contain, contrary to the opinion formed in Leadville, but small quantities of arsenic and antimony.

(20). That the practice of roasting the dust in order to free it from arsenic and antimony as adopted at one smelter, is a useless and costly one, which ought not to be generalised in Leadville.

(21). That accretions are products of sublimation, and that these products, which line the shafts of the furnaces and interfere seriously with a regular run, might be, to some extent, avoided, or made less troublesome by a slight modification of the manner of charging the furnaces and by the adoption of caustic lime instead of raw limestone in smelting.

(22). That some accretions are characterised by the concentration, sometimes in large quantities, of metals such as tin, arsenic, antimony, and zinc, which exist in but small quantities in the ores.

(23). That the charcoal used in smelting is of very good, and the coke of bad quality; but that fuel obtained by mixing them contains 10 per cent. of ash, and that it requires a maximum amount of 32 to 33 parts of this fuel for 100 parts of ore, and 24 parts for 100 parts of charges, to effect smelting; but that at several smelters these percentages are considerably lowered.

(24). That for every 100 parts of carbon thrown in the furnaces with the smelting charges, only 40 parts reach the zone of combustion at the tuyeres, the balance being oxidised in the upper zones to carbonic oxide, chiefly by the carbonic acid formed in the zone of combustion, involving, as is well known, an absorption of heat.

INDEX.

PRINTED BY J. S. VIRTUE AND CO., LIMITED, CITY ROAD, LONDON.

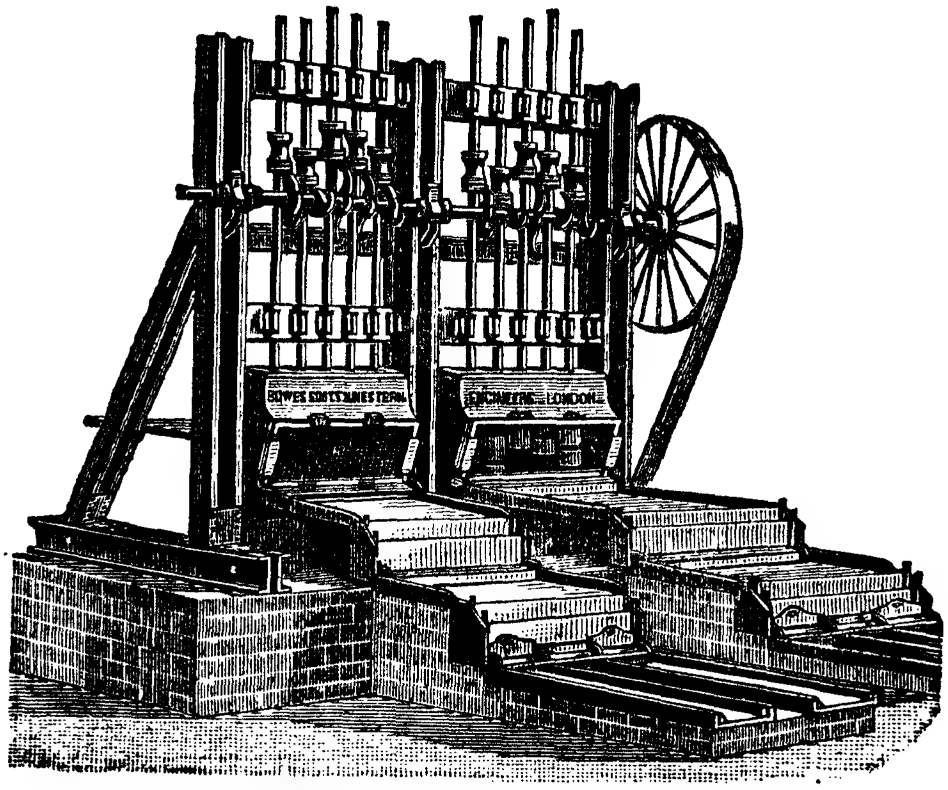
BOWES SCOTT & WESTERN
ENGINEERS LONDON

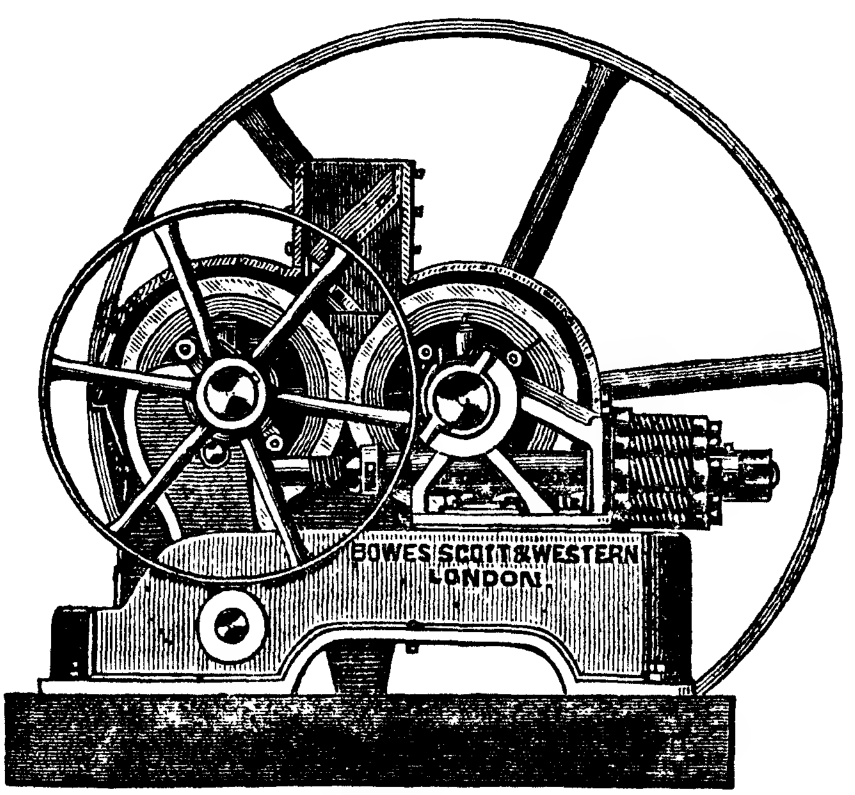
BOWES SCOTT & WESTERN
LONDON.

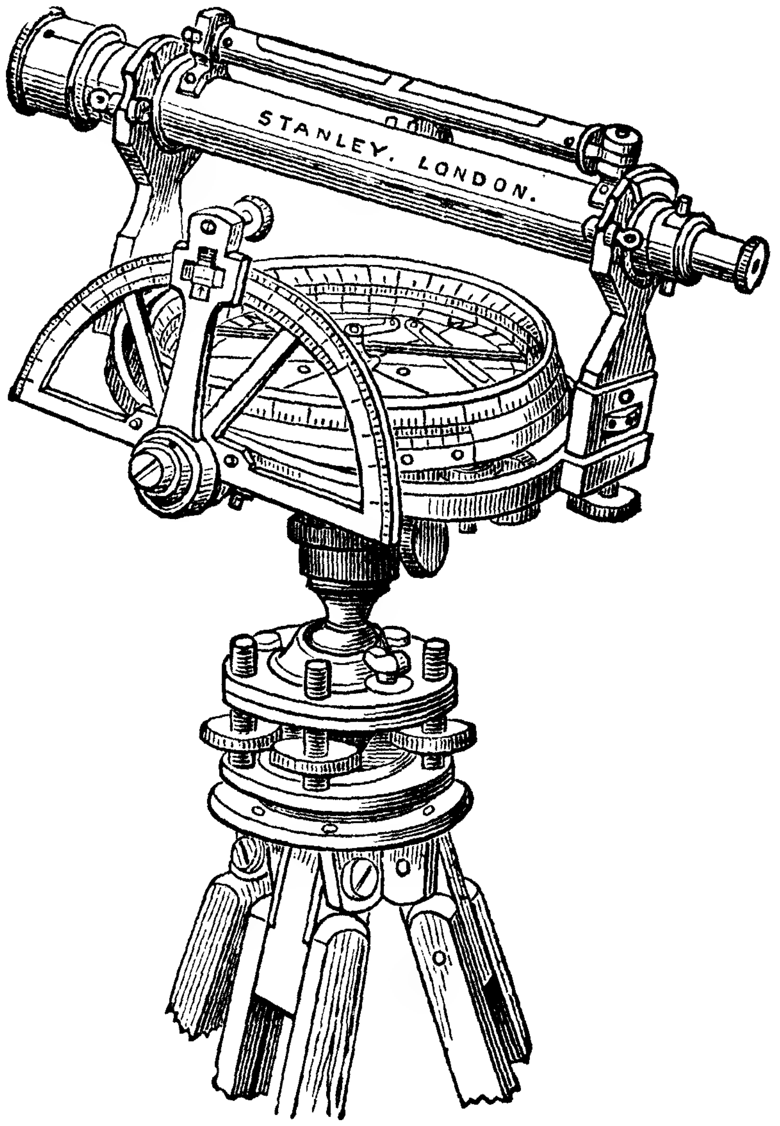
STANLEY. LONDON.

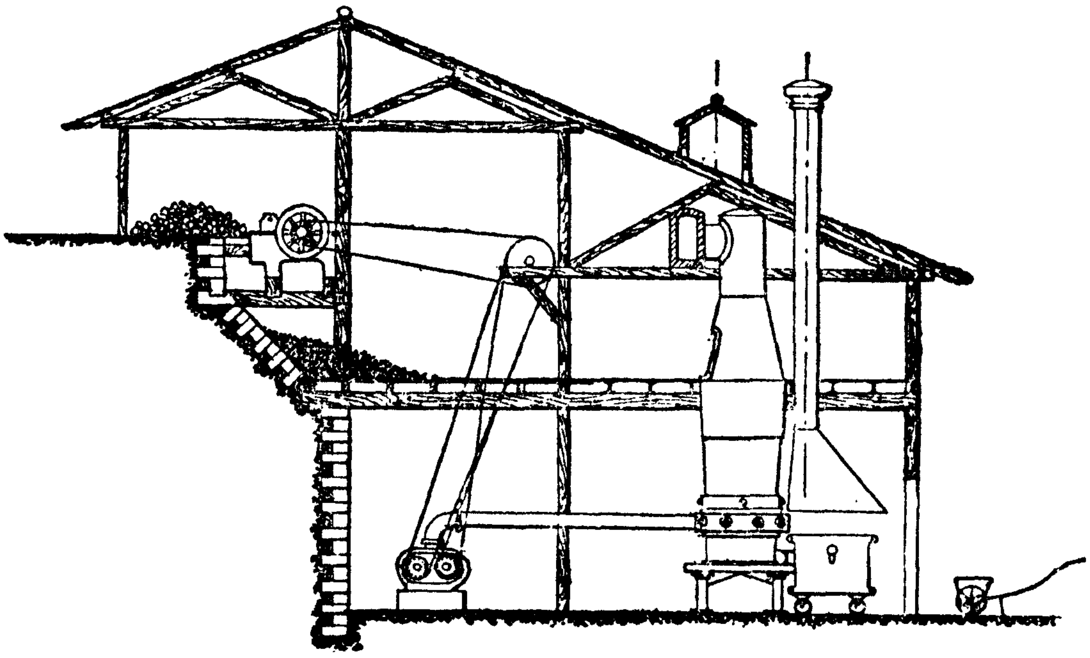

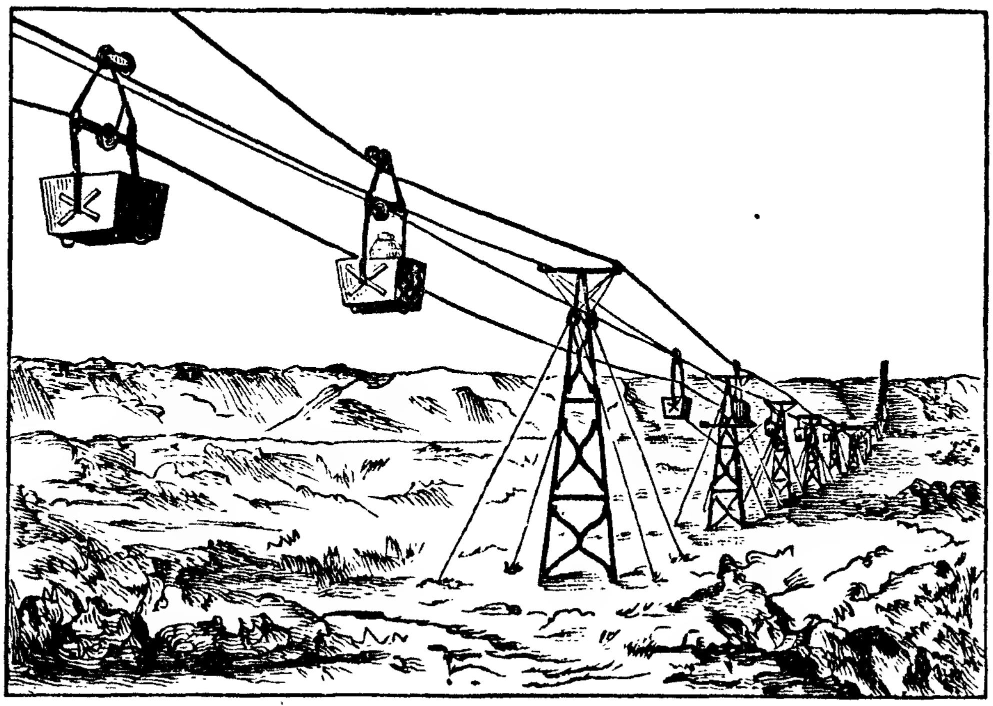

The oldest, most influential, and most largely circulated British Journal connected with the Mining and allied industries.

ESTABLISHED OVER FIFTY YEARS.

THE MINING JOURNAL,
RAILWAY AND COMMERCIAL GAZETTE.
(*ILLUSTRATED*).

CIRCULATES ALL OVER THE WORLD
AMONGST MINERS, ENGINEERS, MANUFACTURERS, CAPITALISTS, & INVESTORS.

PUBLISHED EVERY SATURDAY—PRICE SIXPENCE.

ANNUAL SUBSCRIPTION.—Inland, £1 4s.; the United States of America, Canada, and the Continent of Europe, £1 8s., Post Free.

From the number of years it has been established, and its extensive circulation (at home and abroad) amongst Capitalists and those practically connected with Mining Enterprise and Commerce **THE MINING JOURNAL** Offers unusual advantages for Advertising Sale of Mineral Properties, Colliery and Mine Machinery, Manufacturing Establishments, Commercial Notices, Inventions and Articles intended for the information and use of persons engaged in Mechanical and Engineering and Mining Work. Through the *Mining Journal* the Government and influential Companies advertise their contracts, thus affording a guarantee that a thorough and extensive publicity is secured for all matters which it is desired to bring before the Business World. The literary contents of the *Mining Journal* comprise practical, technical and descriptive articles on Mining, Metallurgical, Engineering, and kindred subjects; Reports of the Meetings of Public Companies; the latest and most exhaustive Mining Intelligence from all parts of the World; Portrait Sketches; Interviews; Notes and Comments, &c., &c. Free discussion is invited upon all topics within the scope of the Journal.

Offices—18, FINCH LANE, and 3, DORSET BUILDINGS, SALISBURY SQUARE, E.C.

Established 1860.

THE COLLIERY GUARDIAN,

AND JOURNAL OF THE COAL & IRON TRADES.

Published every Friday by the Colliery Guardian Co., Limited.

PRICE FIVEPENCE—BY POST, SIXPENCE.

Annual Subscription, post free, 24s.; Half-Yearly, 12s.; Quarterly, 6s.

If paid in advance, One Guinea per annum, post free.

CONTAINS:

LATEST REPORTS FROM ALL COAL AND IRON CENTRES.

Special Continental Intelligence.
Articles on Theoretical and Practical Coal-mining and Surveying.
Open Contracts.
Coal and Iron Prices.
Share List.
Barometrical Chart.
Correspondence.
Reviews.
Reports of Mining Associations, Mining Institutes, Engineering Societies, Public Companies, Trials of Newest Appliances.

◆◆◆◆◆◆◆◆◆◆◆◆◆◆◆◆◆◆◆◆◆◆◆◆◆◆

OFFICES:

49, ESSEX STREET, STRAND, LONDON, W.C.

Advertisement Tariff on application. Telegrams: "Colliery Guardian." London.

7, STATIONERS' HALL COURT, LONDON, E.C.
October, 1891.

A
CATALOGUE OF BOOKS

INCLUDING NEW AND STANDARD WORKS IN

ENGINEERING: CIVIL, MECHANICAL, AND MARINE,
MINING AND METALLURGY,
ELECTRICITY AND ELECTRICAL ENGINEERING,
ARCHITECTURE AND BUILDING,
INDUSTRIAL AND DECORATIVE ARTS, SCIENCE, TRADE,
AGRICULTURE, GARDENING,
LAND AND ESTATE MANAGEMENT, LAW, &c.

PUBLISHED BY

CROSBY LOCKWOOD & SON.

MECHANICAL ENGINEERING, etc.

New Pocket-Book for Mechanical Engineers.

THE MECHANICAL ENGINEER'S POCKET-BOOK OF TABLES, FORMULÆ, RULES AND DATA. A Handy Book of Reference for Daily Use in Engineering Practice. By D. KINNEAR CLARK, M.Inst.C.E., Author of "Railway Machinery," "Tramways," &c. &c. Small 8vo, nearly 700 pages. With Illustrations. Rounded edges, cloth limp, 7*s.* 6*d.*; or leather, gilt edges, 9*s.* [*Just published.*

New Manual for Practical Engineers.

THE PRACTICAL ENGINEER'S HAND-BOOK. Comprising a Treatise on Modern Engines and Boilers: Marine, Locomotive and Stationary. And containing a large collection of Rules and Practical Data relating to recent Practice in Designing and Constructing all kinds of Engines, Boilers, and other Engineering work. The whole constituting a comprehensive Key to the Board of Trade and other Examinations for Certificates of Competency in Modern Mechanical Engineering. By WALTER S. HUTTON, Civil and Mechanical Engineer, Author of "The Works' Manager's Handbook for Engineers," &c. With upwards of 370 Illustrations. Third Edition, Revised, with Additions. Medium 8vo, nearly 500 pp., price 18*s.* Strongly bound.

☞ *This work is designed as a companion to the Author's* "WORKS' MANAGER'S HAND-BOOK." *It possesses many new and original features, and contains, like its predecessor, a quantity of matter not originally intended for publication, but collected by the author for his own use in the construction of a great variety of modern engineering work.*

⁂ OPINIONS OF THE PRESS.

"A thoroughly good practical handbook, which no engineer can go through without learning something that will be of service to him."—*Marine Engineer.*

"An excellent book of reference for engineers, and a valuable text-book for students of engineering."—*Scotsman.*

"This valuable manual embodies the results and experience of the leading authorities on mechanical engineering."—*Building News.*

"The author has collected together a surprising quantity of rules and practical data, and has shown much judgment in the selections he has made. . . . There is no doubt that this book is one of the most useful of its kind published, and will be a very popular compendium."—*Engineer.*

"A mass of information, set down in simple language, and in such a form that it can be easily referred to at any time. The matter is uniformly good and well chosen, and is greatly elucidated by the illustrations. The book will find its way on to most engineers' shelves, where it will rank as one of the most useful books of reference."—*Practical Engineer.*

"Should be found on the office shelf of all practical engineers."—*English Mechanic.*

Handbook for Works' Managers.

THE WORKS' MANAGER'S HANDBOOK OF MODERN RULES, TABLES, AND DATA. For Engineers, Millwrights, and Boiler Makers; Tool Makers, Machinists, and Metal Workers; Iron and Brass Founders, &c. By W. S. HUTTON, C.E., Author of "The Practical Engineer's Handbook." Fourth Edition, carefully Revised, and partly Re-written. In One handsome Volume, medium 8vo, 15*s.* strongly bound. [*Just published.*

☞ *The Author having compiled Rules and Data for his own use in a great variety of modern engineering work, and having found his notes extremely useful, decided to publish them—revised to date—believing that a practical work, suited to the* DAILY REQUIREMENTS OF MODERN ENGINEERS, *would be favourably received.*

In the Third Edition, the following among other additions have been made, viz.: Rules for the Proportions of Riveted Joints in Soft Steel Plates, the Results of Experiments by PROFESSOR KENNEDY *for the Institution of Mechanical Engineers—Rules for the Proportions of Turbines—Rules for the Strength of Hollow Shafts of Whitworth's Compressed Steel, &c.*

⁂ OPINIONS OF THE PRESS.

"The author treats every subject from the point of view of one who has collected workshop notes for application in workshop practice, rather than from the theoretical or literary aspect. The volume contains a great deal of that kind of information which is gained only by practical experience, and is seldom written in books."—*Engineer.*

"The volume is an exceedingly useful one, brimful with engineers' notes, memoranda, and rules, and well worthy of being on every mechanical engineer's bookshelf."—*Mechanical World.*

"The information is precisely that likely to be required in practice. . . . The work forms a desirable addition to the library not only of the works manager, but of anyone connected with general engineering."—*Mining Journal.*

"A formidable mass of facts and figures, readily accessible through an elaborate index . . . . Such a volume will be found absolutely necessary as a book of reference in all sorts of 'works' connected with the metal trades."—*Ryland's Iron Trades Circular.*

"Brimful of useful information, stated in a concise form, Mr. Hutton's books have met a pressing want among engineers. The book must prove extremely useful to every practical man possessing a copy."—*Practical Engineer.*

Practical Treatise on Modern Steam-Boilers.

STEAM-BOILER CONSTRUCTION. A Practical Handbook for Engineers, Boiler-Makers, and Steam Users. Containing a large Collection of Rules and Data relating to the Design, Construction, and Working of Modern Stationary, Locomotive, and Marine Steam-Boilers. By WALTER S. HUTTON, C.E., Author of "The Works' Manager's Handbook," &c. With upwards of 300 Illustrations. Medium 8vo, 18*s.* cloth. [*Just published.*

"Every detail, both in boiler design and management, is clearly laid before the reader. The volume shows that boiler construction has been reduced to the condition of one of the most exact sciences; and such a book is of the utmost value to the *fin de siècle* Engineer and Works' Manager."—*Marine Engineer.*

"There has long been room for a modern handbook on steam boilers; there is not that room now, because Mr. Hutton has filled it. It is a thoroughly practical book for those who are occupied in the construction, design, selection, or use of boilers."—*Engineer.*

"The Modernised Templeton."

THE PRACTICAL MECHANIC'S WORKSHOP COMPANION. Comprising a great variety of the most useful Rules and Formulæ in Mechanical Science, with numerous Tables of Practical Data and Calculated Results for Facilitating Mechanical Operations. By WILLIAM TEMPLETON, Author of "The Engineer's Practical Assistant," &c. &c. Sixteenth Edition, Revised, Modernised, and considerably Enlarged by WALTER S. HUTTON, C.E., Author of "The Works' Manager's Handbook," "The Practical Engineer's Handbook," &c. Fcap. 8vo, nearly 500 pp., with Eight Plates and upwards of 250 Illustrative Diagrams, 6*s.*, strongly bound for workshop or pocket wear and tear. [*Just published.*

⁂ OPINIONS OF THE PRESS.

"In its modernised form Hutton's 'Templeton' should have a wide sale, for it contains much valuable information which the mechanic will often find of use, and not a few tables and notes which he might look for in vain in other works. This modernised edition will be appreciated by all who have learned to value the original editions of 'Templeton.'"—*English Mechanic.*

"It has met with great success in the engineering workshop, as we can testify; and there are a great many men who, in a great measure, owe their rise in life to this little book."—*Building News.*

"This familiar text-book—well known to all mechanics and engineers—is of essential service to the every-day requirements of engineers, millwrights, and the various trades connected with engineering and building. The new modernised edition is worth its weight in gold."—*Building News.* (Second Notice.)

"This well-known and largely used book contains information, brought up to date, of the sort so useful to the foreman and draughtsman. So much fresh information has been introduced as to constitute it practically a new book. It will be largely used in the office and workshop."—*Mechanical World.*

Stone-working Machinery.

STONE-WORKING MACHINERY, and the Rapid and Economical Conversion of Stone. With Hints on the Arrangement and Management of Stone Works. By M. POWIS BALE, M.I.M.E. With Illusts. Crown 8vo, 9*s.*

"Should be in the hands of every mason or student of stone-work."—*Colliery Guardian.*

"A capital handbook for all who manipulate stone for building or ornamental purposes."—*Machinery Market.*

Pump Construction and Management.

PUMPS AND PUMPING: A Handbook for Pump Users. Being Notes on Selection, Construction and Management. By M. POWIS BALE, M.I.M.E., Author of "Woodworking Machinery," &c. Crown 8vo, 2*s.* 6*d.*

"The matter is set forth as concisely as possible. In fact, condensation rather than diffuseness has been the author's aim throughout; yet he does not seem to have omitted anything likely to be of use."—*Journal of Gas Lighting.*

Milling Machines, etc.

MILLING: A Treatise on Machines, Appliances, and Processes employed in the Shaping of Metals by Rotary Cutters, including Information on Making and Grinding the Cutters. By PAUL N. HASLUCK, Author of "Lathe-work." With upwards of 300 Engravings. Large crown 8vo, 12*s.* 6*d.* cloth.
[*Just published.*

Turning.

LATHE-WORK: A Practical Treatise on the Tools, Appliances, and Processes employed in the Art of Turning. By PAUL N. HASLUCK. Fourth Edition, Revised and Enlarged. Cr. 8vo, 5*s.* cloth.

"Written by a man who knows, not only how work ought to be done, but who also knows how to do it, and how to convey his knowledge to others. To all turners this book would be valuable."—*Engineering.*

"We can safely recommend the work to young engineers. To the amateur it will simply be invaluable. To the student it will convey a great deal of useful information."—*Engineer.*

Screw-Cutting.

SCREW THREADS: And Methods of Producing Them. With Numerous Tables, and complete directions for using Screw-Cutting Lathes. By PAUL N. HASLUCK, Author of "Lathe-Work," &c. With Fifty Illustrations. Third Edition, Enlarged. Waistcoat-pocket size, 1*s.* 6*d.* cloth.

"Full of useful information, hints and practical criticism. Taps, dies and screwing-tools generally are illustrated and their action described."—*Mechanical World.*

"It is a complete compendium of all the details of the screw cutting lathe; in fact a *multum-in-parvo* on all the subjects it treats upon."—*Carpenter and Builder.*

Smith's Tables for Mechanics, etc.

TABLES, MEMORANDA, AND CALCULATED RESULTS, FOR MECHANICS, ENGINEERS, ARCHITECTS, BUILDERS, etc. Selected and Arranged by FRANCIS SMITH. Fifth Edition, thoroughly Revised and Enlarged, with a New Section of ELECTRICAL TABLES, FORMULÆ, and MEMORANDA. Waistcoat-pocket size, 1*s.* 6*d.* limp leather. [*Just published.*

"It would, perhaps, be as difficult to make a small pocket-book selection of notes and formulæ to suit ALL engineers as it would be to make a universal medicine; but Mr. Smith's waistcoat-pocket collection may be looked upon as a successful attempt."—*Engineer.*

"The best example we have ever seen of 250 pages of useful matter packed into the dimensions of a card-case."—*Building News.* "A veritable pocket treasury of knowledge."—*Iron.*

Engineer's and Machinist's Assistant.

THE ENGINEER'S, MILLWRIGHT'S, and MACHINIST'S PRACTICAL ASSISTANT. A collection of Useful Tables, Rules and Data. By WILLIAM TEMPLETON. 7th Edition, with Additions. 18mo, 2*s.* 6*d.* cloth.

"Occupies a foremost place among books of this kind. A more suitable present to an apprentice to any of the mechanical trades could not possibly be made."—*Building News.*

"A deservedly popular work, it should be in the 'drawer' of every mechanic."—*English Mechanic.*

Iron and Steel.

"IRON AND STEEL": A Work for the Forge, Foundry, Factory, and Office. Containing ready, useful, and trustworthy Information for Ironmasters; Managers of Bar, Rail, Plate, and Sheet Rolling Mills; Iron and Metal Founders; Iron Ship and Bridge Builders; Mechanical, Mining, and Consulting Engineers; Contractors, Builders, &c. By CHARLES HOARE. Eighth Edition, Revised and considerably Enlarged. 32mo, 6*s.* leather.

"One of the best of the pocket books."—*English Mechanic.*

"We cordially recommend this book to those engaged in considering the details of all kinds of iron and steel works."—*Naval Science.*

Engineering Construction.

PATTERN-MAKING: A Practical Treatise, embracing the Main Types of Engineering Construction, and including Gearing, both Hand and Machine made, Engine Work, Sheaves and Pulleys, Pipes and Columns, Screws, Machine Parts, Pumps and Cocks, the Moulding of Patterns in Loam and Greensand, &c., together with the methods of Estimating the weight of Castings; to which is added an Appendix of Tables for Workshop Reference. By a Foreman Pattern Maker. With upwards of Three Hundred and Seventy Illustrations. Crown 8vo, 7*s.* 6*d.* cloth.

"A well-written technical guide, evidently written by a man who understands and has practised what he has written about. . . . We cordially recommend it to engineering students, young journeymen, and others desirous of being initiated into the mysteries of pattern-making."—*Builder.*

"We can confidently recommend this comprehensive treatise.'—*Building News.*

"Likely to prove a welcome guide to many workmen, especially to draughtsmen who have lacked a training in the shops, pupils pursuing their practical studies in our factories, and to employers and managers in engineering works."—*Hardware Trade Journal.*

"More than 370 illustrations help to explain the text, which is, however, always clear and explicit, thus rendering the work an excellent *vade mecum* for the apprentice who desires to become master of his trade."—*English Mechanic.*

Dictionary of Mechanical Engineering Terms.

LOCKWOOD'S DICTIONARY OF TERMS USED IN THE PRACTICE OF MECHANICAL ENGINEERING, embracing those current in the Drawing Office, Pattern Shop, Foundry, Fitting, Turning, Smith's and Boiler Shops, &c. &c. Comprising upwards of 6,000 Definitions. Edited by A Foreman Pattern-Maker, Author of "Pattern Making." Crown 8vo, 7*s.* 6*d.* cloth.

"Just the sort of handy dictionary required by the various trades engaged in mechanical engineering. The practical engineering pupil will find the book of great value in his studies, and every foreman engineer and mechanic should have a copy."—*Building News.*

"After a careful examination of the book, and trying all manner of words, we think that the engineer will here find all he is likely to require. It will be largely used."—*Practical Engineer.*

"One of the most useful books which can be presented to a mechanic or student."—*English Mechanic.*

"Not merely a dictionary, but, to a certain extent, also a most valuable guide. It strikes us as a happy idea to combine with a definition of the phrase useful information on the subject of which it treats."—*Machinery Market.*

"No word having connection with any branch of constructive engineering seems to be omitted. No more comprehensive work has been, so far, issued.—*Knowledge.*

"We strongly commend this useful and reliable adviser to our friends in the workshop, and to students everywhere."—*Colliery Guardian.*

Steam Boilers.

A TREATISE ON STEAM BOILERS: Their Strength, Construction, and Economical Working. By Robert Wilson, C.E. Fifth Edition. 12mo, 6*s.* cloth.

"The best treatise that has ever been published on steam boilers."—*Engineer.*

"The author shows himself perfect master of his subject, and we heartily recommend all employing steam power to possess themselves of the work."—*Ryland's Iron Trade Circular.*

Boiler Chimneys.

BOILER AND FACTORY CHIMNEYS; Their Draught-Power and Stability. With a Chapter on *Lightning Conductors.* By Robert Wilson, A.I.C.E., Author of "A Treatise on Steam Boilers," &c. Second Edition. Crown 8vo, 3*s.* 6*d.* cloth.

"Full of useful information, definite in statement, and thoroughly practical in treatment.—*The Local Government Chronicle.*

"A valuable contribution to the literature of scientific building."—*The Builder.*

Boiler Making.

THE BOILER-MAKER'S READY RECKONER & ASSISTANT. With Examples of Practical Geometry and Templating, for the Use of Platers, Smiths and Riveters. By John Courtney, Edited by D. K. Clark, M.I.C.E. Third Edition, 480 pp., with 140 Illusts. Fcap. 8vo, 7*s.* half-bound.

"No workman or apprentice should be without this book."—*Iron Trade Circular.*

"Boiler-makers will readily recognise the value of this volume. . . . The tables are clearly printed, and so arranged that they can be referred to with the greatest facility, so that it cannot be doubted that they will be generally appreciated and much used."—*Mining Journal.*

Warming.

HEATING BY HOT WATER; with Information and Suggestions on the best Methods of Heating Public, Private and Horticultural Buildings. By Walter Jones. With Illustrations, crown 8vo, 2*s.* cloth.

"We confidently recommend all interested in heating by hot water to secure a copy of this valuable little treatise."—*The Plumber and Decorator.*

Steam Engine.

TEXT-BOOK ON THE STEAM ENGINE. With a Supplement on Gas Engines, and PART II. ON HEAT ENGINES. By T. M. GOODEVE, M.A., Barrister-at-Law, Professor of Mechanics at the Normal School of Science and the Royal School of Mines; Author of "The Principles of Mechanics," "The Elements of Mechanism," &c. Eleventh Edition, Enlarged. With numerous Illustrations. Crown 8vo, 6*s.* cloth.

"Professor Goodeve has given us a treatise on the steam engine which will bear comparison with anything written by Huxley or Maxwell, and we can award it no higher praise."—*Engineer.*

"Mr. Goodeve's text-book is a work of which every young engineer should possess himself." —*Mining Journal.*

Gas Engines.

ON GAS-ENGINES. Being a Reprint, with some Additions, of the Supplement to the *Text-book on the Steam Engine,* by T. M. GOODEVE, M.A. Crown 8vo, 2*s.* 6*d.* cloth.

"Like all Mr. Goodeve's writings, the present is no exception in point of general excellence. It is a valuable little volume."—*Mechanical World.*

Steam.

THE SAFE USE OF STEAM. Containing Rules for Unprofessional Steam-users. By an ENGINEER. Sixth Edition. Sewed, 6*d.*

"If steam-users would but learn this little book by heart boiler explosions would become sensations by their rarity."—*English Mechanic.*

Reference Book for Mechanical Engineers.

THE MECHANICAL ENGINEER'S REFERENCE BOOK, for Machine and Boiler Construction. In Two Parts. Part I. GENERAL ENGINEERING DATA. Part II. BOILER CONSTRUCTION. With 51 Plates and numerous Illustrations. By NELSON FOLEY, M.I.N.A. Folio, £5 5*s.* half-bound. [*Just published.*

Coal and Speed Tables.

A POCKET BOOK OF COAL AND SPEED TABLES, for Engineers and Steam-users. By NELSON FOLEY, Author of "Boiler Construction." Pocket-size, 3*s.* 6*d.* cloth; 4*s.* leather.

"These tables are designed to meet the requirements of every-day use; and may be commended to engineers and users of steam."—*Iron.*

"This pocket-book well merits the attention of the practical engineer. Mr. Foley has compiled a very useful set of tables, the information contained in which is frequently required by engineers, coal consumers and users of steam."—*Iron and Coal Trades Review.*

Fire Engineering.

FIRES, FIRE-ENGINES, AND FIRE-BRIGADES. With a History of Fire-Engines, their Construction, Use, and Management; Remarks on Fire-Proof Buildings, and the Preservation of Life from Fire; Foreign Fire Systems, &c. By C. F. T. YOUNG, C.E. With numerous Illustrations, 544 pp., demy 8vo, £1 4*s.* cloth.

"To such of our readers as are interested in the subject of fires and fire apparatus, we can most heartily commend this book."—*Engineering.*

"It displays much evidence of careful research; and Mr. Young has put his facts neatly together. It is evident enough that his acquaintance with the practical details of the construction of steam fire engines is accurate and full."—*Engineer.*

Estimating for Engineering Work, &c.

ENGINEERING ESTIMATES, COSTS AND ACCOUNTS: A Guide to Commercial Engineering. With numerous Examples of Estimates and Costs of Millwright Work, Miscellaneous Productions, Steam Engines and Steam Boilers; and a Section on the Preparation of Costs Accounts. By A GENERAL MANAGER. Demy 8vo, 12*s.* cloth.

"This is an excellent and very useful book, covering subject-matter in constant requisition in every factory and workshop. . . . The book is invaluable, not only to the young engineer, but also to the estimate department of every works."—*Builder.*

"We accord the work unqualified praise. The information is given in a plain, straightforward manner, and bears throughout evidence of the intimate practical acquaintance of the author with every phrase of commercial engineering."—*Mechanical World.*

Elementary Mechanics.

CONDENSED MECHANICS. A Selection of Formulæ, Rules, Tables, and Data for the Use of Engineering Students, Science Classes, &c. In Accordance with the Requirements of the Science and Art Department By W. G. CRAWFORD HUGHES, A.M.I.C.E. Crown 8vo, 2*s.* 6*d.* cloth. [*Just published*

THE POPULAR WORKS OF MICHAEL REYNOLDS

("THE ENGINE DRIVER'S FRIEND").

Locomotive-Engine Driving.

LOCOMOTIVE-ENGINE DRIVING: A Practical Manual for Engineers in charge of Locomotive Engines. By MICHAEL REYNOLDS, Member of the Society of Engineers, formerly Locomotive Inspector L. B. and S. C. R. Eighth Edition. Including a KEY TO THE LOCOMOTIVE ENGINE. With Illustrations and Portrait of Author. Crown 8vo, 4s. 6*d.* cloth.

"Mr. Reynolds has supplied a want, and has supplied it well. We can confidently recommend the book, not only to the practical driver, but to everyone who takes an interest in the performance of locomotive engines."—*The Engineer.*

"Mr. Reynolds has opened a new chapter in the literature of the day. This admirable practical treatise, of the practical utility of which we have to speak in terms of warm commendation."—*Athenæum.*

"Evidently the work of one who knows his subject thoroughly."—*Railway Service Gazette.*

"Were the cautions and rules given in the book to become part of the every-day working of our engine-drivers, we might have fewer distressing accidents to deplore."—*Scotsman.*

Stationary Engine Driving.

STATIONARY ENGINE DRIVING: A Practical Manual for Engineers in charge of Stationary Engines. By MICHAEL REYNOLDS. Fourth Edition, Enlarged. With Plates and Woodcuts. Crown 8vo, 4s. 6*d.* cloth.

"The author is thoroughly acquainted with his subjects, and his advice on the various points treated is clear and practical. . . . He has produced a manual which is an exceedingly useful one for the class for whom it is specially intended."—*Engineering.*

"Our author leaves no stone unturned. He is determined that his readers shall not only know something about the stationary engine, but all about it."—*Engineer.*

"An engineman who has mastered the contents of Mr. Reynolds's book will require but little actual experience with boilers and engines before he can be trusted to look after them."—*English Mechanic.*

The Engineer, Fireman, and Engine-Boy.

THE MODEL LOCOMOTIVE ENGINEER, FIREMAN, and ENGINE-BOY. Comprising a Historical Notice of the Pioneer Locomotive Engines and their Inventors. By MICHAEL REYNOLDS. With numerous Illustrations and a fine Portrait of George Stephenson. Crown 8vo, 4s. 6*d.* cloth.

"From the technical knowledge of the author it will appeal to the railway man of to-day more forcibly than anything written by Dr. Smiles. . . . The volume contains information of a technical kind, and facts that every driver should be familiar with."—*English Mechanic.*

"We should be glad to see this book in the possession of everyone in the kingdom who has ever laid, or is to lay, hands on a locomotive engine."—*Iron.*

Continuous Railway Brakes.

CONTINUOUS RAILWAY BRAKES: A Practical Treatise on the several Systems in Use in the United Kingdom; their Construction and Performance. With copious Illustrations and numerous Tables. By MICHAEL REYNOLDS. Large crown 8vo, 9s. cloth.

"A popular explanation of the different brakes. It will be of great assistance in forming public opinion, and will be studied with benefit by those who take an interest in the brake."—*English Mechanic.*

"Written with sufficient technical detail to enable the principle and relative connection of the various parts of each particular brake to be readily grasped."—*Mechanical World.*

Engine-Driving Life.

ENGINE-DRIVING LIFE: Stirring Adventures and Incidents in the Lives of Locomotive-Engine Drivers. By MICHAEL REYNOLDS. Second Edition, with Additional Chapters. Crown 8vo. 2s. cloth.

"From first to last perfectly fascinating. Wilkie Collins's most thrilling conceptions are thrown into the shade by true incidents, endless in their variety, related in every page."—*North British Mail.*

"Anyone who wishes to get a real insight into railway life cannot do better than read 'Engine-Driving Life' for himself; and if he once take it up he will find that the author's enthusiasm and real love of the engine-driving profession will carry him on till he has read every page."—*Saturday Review.*

Pocket Companion for Enginemen.

THE ENGINEMAN'S POCKET COMPANION AND PRACTICAL EDUCATOR FOR ENGINEMEN, BOILER ATTENDANTS, AND MECHANICS. By MICHAEL REYNOLDS. With Forty-five Illustrations and numerous Diagrams. Second Edition, Revised. Royal 18mo, 3s. 6*d.*, strongly bound for pocket wear.

"This admirable work is well suited to accomplish its object, being the honest workmanship of a competent engineer."—*Glasgow Herald.*

"A most meritorious work, giving in a succinct and practical form all the information an engine-minder desirous of mastering the scientific principles of his daily calling would require."—*Miller*

"A boon to those who are striving to become efficient mechanics."—*Daily Chronicle.*

French-English Glossary for Engineers, etc.

A POCKET GLOSSARY of TECHNICAL TERMS: ENGLISH-FRENCH, FRENCH-ENGLISH; with Tables suitable for the Architectural, Engineering, Manufacturing and Nautical Professions. By JOHN JAMES FLETCHER, Engineer and Surveyor. 200 pp. Waistcoat-pocket size, 1s. 6*d*., limp leather.

"It ought certainly to be in the waistcoat-pocket of every professional man."—*Iron.*

"It is a very great advantage for readers and correspondents in France and England to have so large a number of the words relating to engineering and manufacturers collected in a liliputian volume. The little book will be useful both to students and travellers.'—*Architect.*

"The glossary of terms is very complete, and many of the tables are new and well arranged. We cordially commend the book."—*Mechanical World*

Portable Engines.

THE PORTABLE ENGINE; ITS CONSTRUCTION AND MANAGEMENT. A Practical Manual for Owners and Users of Steam Engines generally. By WILLIAM DYSON WANSBROUGH. With 90 Illustrations. Crown 8vo, 3*s*. 6*d*. cloth.

"This is a work of value to those who use steam machinery. . . . Should be read by everyone who has a steam engine, on a farm or elsewhere."—*Mark Lane Express.*

"We cordially commend this work to buyers and owners of steam engines, and to those who have to do with their construction or use."—*Timber Trades Journal.*

"Such a general knowledge of the steam engine as Mr. Wansbrough furnishes to the reader should be acquired by all intelligent owners and others who use the steam engine."—*Building News.*

"An excellent text-book of this useful form of engine, which describes with all necessary minuteness the details of the various devices. . . 'The Hints to Purchasers contain a good deal of commonsense and practical wisdom."—*English Mechanic.*

CIVIL ENGINEERING, SURVEYING, etc.

MR. HUMBER'S IMPORTANT ENGINEERING BOOKS.

The Water Supply of Cities and Towns.

A COMPREHENSIVE TREATISE on the WATER-SUPPLY OF CITIES AND TOWNS. By WILLIAM HUMBER, A-M.Inst.C.E., and M. Inst. M.E., Author of "Cast and Wrought Iron Bridge Construction," &c. &c. Illustrated with 50 Double Plates, 1 Single Plate, Coloured Frontispiece, and upwards of 250 Woodcuts, and containing 400 pages of Text. Imp. 4to, £6 6s. elegantly and substantially half-bound in morocco.

List of Contents.

I. Historical Sketch of some of the means that have been adopted for the Supply of Water to Cities and Towns.—II. Water and the Foreign Matter usually associated with it.—III. Rainfall and Evaporation.—IV. Springs and the water-bearing formations of various districts.—V. Measurement and Estimation of the flow of Water.—VI. On the Selection of the Source of Supply.—VII. Wells.—VIII. Reservoirs.—IX. The Purification of Water.—X. Pumps.—XI. Pumping Machinery.—XII. Conduits.—XIII. Distribution of Water.—XIV. Meters, Service Pipes, and House Fittings.—XV. The Law and Economy of Water Works. XVI. Constant and Intermittent Supply.—XVII. Description of Plates.—Appendices, giving Tables of Rates of Supply, Velocities, &c. &c., together with Specifications of several Works illustrated, among which will be found: Aberdeen, Bideford, Canterbury, Dundee, Halifax, Lambeth, Rotherham, Dublin, and others.

"The most systematic and valuable work upon water supply hitherto produced in English, or in any other language. . . . Mr. Humber's work is characterised almost throughout by an exhaustiveness much more distinctive of French and German than of English technical treatises."—*Engineer.*

"We can congratulate Mr. Humber on having been able to give so large an amount of information on a subject so important as the water supply of cities and towns. The plates, fifty in number, are mostly drawings of executed works, and alone would have commanded the attention of every engineer whose practice may lie in this branch of the profession."—*Builder.*

Cast and Wrought Iron Bridge Construction.

A COMPLETE AND PRACTICAL TREATISE ON CAST AND WROUGHT IRON BRIDGE CONSTRUCTION, including Iron Foundations. In Three Parts—Theoretical, Practical, and Descriptive. By WILLIAM HUMBER, A.M.Inst.C.E., and M.Inst.M.E. Third Edition, Revised and much improved, with 115 Double Plates (20 of which now first appear in this edition), and numerous Additions to the Text. In Two Vols., imp. 4to, £6 16*s*. 6*d*. half-bound in morocco.

"A very valuable contribution to the standard literature of civil engineering. In addition to elevations, plans and sections, large scale details are given which very much enhance the instructive worth of those illustrations."—*Civil Engineer and Architect's Journal.*

"Mr. Humber's stately volumes, lately issued—in which the most important bridges erected during the last five years, under the direction of the late Mr. Brunel, Sir W. Cubitt, Mr. Hawkshaw, Mr. Page, Mr. Fowler, Mr. Hemans, and others among our most eminent engineers, are drawn and specified in great detail."—*Engineer.*

MR. HUMBER'S GREAT WORK ON MODERN ENGINEERING.

Complete in Four Volumes, imperial 4to, price £12 12s., half-morocco. Each Volume sold separately as follows:—

A RECORD OF THE PROGRESS OF MODERN ENGINEERING. FIRST SERIES. Comprising Civil, Mechanical, Marine, Hydraulic, Railway, Bridge, and other Engineering Works, &c. By WILLIAM HUMBER, A-M.Inst.C.E., &c. Imp. 4to, with 36 Double Plates, drawn to a large scale, Photographic Portrait of John Hawkshaw, C.E., F.R.S., &c., and copious descriptive Letterpress, Specifications, &c., £3 3s. half-morocco.

List of the Plates and Diagrams.

Victoria Station and Roof, L. B. & S. C. R. (8 plates); Southport Pier (2 plates); Victoria Station and Roof, L. C. & D. and G. W. R. (6 plates); Roof of Cremorne Music Hall; Bridge over G. N. Railway; Roof of Station, Dutch Rhenish Rail (2 plates); Bridge over the Thames, West London Extension Railway (5 plates); Armour Plates: Suspension Bridge, Thames (4 plates); The Allen Engine; Suspension Bridge, Avon (3 plates); Underground Railway (3 plates).

"Handsomely lithographed and printed. It will find favour with many who desire to preserve in a permanent form copies of the plans and specifications prepared for the guidance of the contractors for many important engineering works."—*Engineer.*

HUMBER'S RECORD OF MODERN ENGINEERING. SECOND SERIES. Imp. 4to, with 36 Double Plates, Photographic Portrait of Robert Stephenson, C.E., M.P., F.R.S., &c., and copious descriptive Letterpress, Specifications, &c., £3 3s. half-morocco.

List of the Plates and Diagrams.

Birkenhead Docks, Low Water Basin (15 plates); Charing Cross Station Roof, C. C. Railway (3 plates); Digswell Viaduct, Great Northern Railway; Robbery Wood Viaduct, Great Northern Railway; Iron Permanent Way; Clydach Viaduct, Merthyr, Tredegar, and Abergavenny Railway; Ebbw Viaduct, Merthyr, Tredegar, and Abergavenny Railway; College Wood Viaduct, Cornwall Railway; Dublin Winter Palace Roof (3 plates); Bridge over the Thames, L. C. & D. Railway (6 plates); Albert Harbour, Greenock (4 plates).

"Mr. Humber has done the profession good and true service, by the fine collection of examples he has here brought before the profession and the public."—*Practical Mechanic's Journal.*

HUMBER'S RECORD OF MODERN ENGINEERING. THIRD SERIES. Imp. 4to, with 40 Double Plates, Photographic Portrait of J. R. M'Clean, late Pres. Inst. C.E., and copious descriptive Letterpress, Specifications, &c., £3 3s. half-morocco.

List of the Plates and Diagrams.

MAIN DRAINAGE, METROPOLIS.—*North Side.*—Map showing Interception of Sewers; Middle Level Sewer (2 plates); Outfall Sewer, Bridge over River Lea (3 plates); Outfall Sewer, Bridge over Marsh Lane, North Woolwich Railway, and Bow and Barking Railway Junction; Outfall Sewer, Bridge over Bow and Barking Railway (3 plates); Outfall Sewer, Bridge over East London Waterworks' Feeder (2 plates); Outfall Sewer, Reservoir (2 plates); Outfall Sewer, Tumbling Bay and Outlet; Outfall Sewer, Penstocks. *South Side.*—Outfall Sewer, Bermondsey Branch (2 plates); Outfall Sewer, Reservoir and Outlet (4 plates); Outfall Sewer, Filth Hoist; Sections of Sewers (North and South Sides).

THAMES EMBANKMENT.—Section of River Wall; Steamboat Pier, Westminster (2 plates); Landing Stairs between Charing Cross and Waterloo Bridges; York Gate (2 plates); Overflow and Outlet at Savoy Street Sewer (3 plates); Steamboat Pier, Waterloo Bridge (3 plates); Junction of Sewers, Plans and Sections; Gullies, Plans and Sections; Rolling Stock; Granite and Iron Forts.

"The drawings have a constantly increasing value, and whoever desires to possess clear representations of the two great works carried out by our Metropolitan Board will obtain Mr. Humber's volume."—*Engineer.*

HUMBER'S RECORD OF MODERN ENGINEERING. FOURTH SERIES. Imp. 4to, with 36 Double Plates, Photographic Portrait of John Fowler, late Pres. Inst. C.E., and copious descriptive Letterpress, Specifications, &c., £3 3s. half-morocco.

List of the Plates and Diagrams.

Abbey Mills Pumping Station, Main Drainage, Metropolis (4 plates); Barrow Docks (5 plates); Manquis Viaduct, Santiago and Valparaiso Railway (2 plates); Adam's Locomotive, St. Helen's Canal Railway (2 plates); Cannon Street Station Roof, Charing Cross Railway (3 plates); Road Bridge over the River Moka (2 plates); Telegraphic Apparatus for Mesopotamia; Viaduct over the River Wye, Midland Railway (3 plates); St. Germans Viaduct, Cornwall Railway (2 plates); Wrought-Iron Cylinder for Diving Bell; Millwall Docks (6 plates); Milroy's Patent Excavator; Metropolitan District Railway (6 plates); Harbours, Ports, and Breakwaters (3 plates).

"We gladly welcome another year's issue of this valuable publication from the able pen of Mr. Humber. The accuracy and general excellence of this work are well known, while its usefulness in giving the measurements and details of some of the latest examples of engineering, as carried out by the most eminent men in the profession, cannot be too highly prized."—*Artisan.*

MR. HUMBER'S ENGINEERING BOOKS—*continued.*

Strains, Calculation of.

A HANDY BOOK FOR THE CALCULATION OF STRAINS IN GIRDERS AND SIMILAR STRUCTURES, AND THEIR STRENGTH. Consisting of Formulæ and Corresponding Diagrams, with numerous details for Practical Application, &c. By WILLIAM HUMBER, A-M.Inst.C.E., &c. Fourth Edition. Crown 8vo, nearly 100 Woodcuts and 3 Plates, 7*s.* 6*d.* cloth.

"The formulæ are neatly expressed, and the diagrams good."—*Athenæum.*

"We heartily commend this really *handy* book to our engineer and architect readers."—*English Mechanic.*

Barlow's Strength of Materials, enlarged by Humber

A TREATISE ON THE STRENGTH OF MATERIALS; with Rules for Application in Architecture, the Construction of Suspension Bridges, Railways, &c. By PETER BARLOW, F.R.S. A New Edition, revised by his Sons, P. W. BARLOW, F.R.S., and W. H. BARLOW, F.R.S.; to which are added, Experiments by HODGKINSON, FAIRBAIRN, and KIRKALDY; and Formulæ for Calculating Girders, &c. Arranged and Edited by W. HUMBER, A-M.Inst.C.E. Demy 8vo, 400 pp., with 19 large Plates and numerous Woodcuts, 18*s.* cloth.

"Valuable alike to the student, tyro, and the experienced practitioner, it will always rank in future, as it has hitherto done, as the standard treatise on that particular subject."—*Engineer.*

"There is no greater authority than Barlow."—*Building News.*

"As a scientific work of the first class, it deserves a foremost place on the bookshelves of every civil engineer and practical mechanic."—*English Mechanic.*

Trigonometrical Surveying.

AN OUTLINE OF THE METHOD OF CONDUCTING A TRIGONOMETRICAL SURVEY, for the Formation of Geographical and Topographical Maps and Plans, Military Reconnaissance, Levelling, &c., with Useful Problems, Formulæ, and Tables. By Lieut.-General FROME, R.E. Fourth Edition, Revised and partly Re-written by Major General Sir CHARLES WARREN, G.C.M.G., R.E. With 19 Plates and 115 Woodcuts, royal 8vo, 16*s.* cloth.

"The simple fact that a fourth edition has been called for is the best testimony to its merits. No words of praise from us can strengthen the position so well and so steadily maintained by this work. Sir Charles Warren has revised the entire work, and made such additions as were necessary to bring every portion of the contents up to the present date."—*Broad Arrow.*

Field Fortification.

A TREATISE ON FIELD FORTIFICATION, THE ATTACK OF FORTRESSES, MILITARY MINING, AND RECONNOITRING. By Colonel I. S. MACAULAY, late Professor of Fortification in the R.M.A., Woolwich. Sixth Edition, crown 8vo, cloth, with separate Atlas of 12 Plates, 12*s.*

Oblique Bridges.

A PRACTICAL AND THEORETICAL ESSAY ON OBLIQUE BRIDGES. With 13 large Plates. By the late GEORGE WATSON BUCK, M.I.C.E. Third Edition, revised by his Son, J. H. WATSON BUCK, M.I.C.E.; and with the addition of Description to Diagrams for Facilitating the Construction of Oblique Bridges, by W. H. BARLOW, M.I.C.E. Royal 8vo, 12*s.* cloth.

"The standard text-book for all engineers regarding skew arches is Mr. Buck's treatise, and it would be impossible to consult a better."—*Engineer.*

"Mr. Buck's treatise is recognised as a standard text-book, and his treatment has divested the subject of many of the intricacies supposed to belong to it. As a guide to the engineer and architect, on a confessedly difficult subject, Mr. Buck's work is unsurpassed."—*Building News.*

Water Storage, Conveyance and Utilisation.

WATER ENGINEERING: A Practical Treatise on the Measurement, Storage, Conveyance and Utilisation of Water for the Supply of Towns, for Mill Power, and for other Purposes. By CHARLES SLAGG, Water and Drainage Engineer, A.M.Inst.C.E., Author of "Sanitary Work in the Smaller Towns, and in Villages," &c. With numerous Illusts. Cr. 8vo, 7*s.* 6*d.* cloth.

"As a small practical treatise on the water supply of towns, and on some applications of water-power, the work is in many respects excellent."—*Engineering.*

"The author has collated the results deduced from the experiments of the most eminent authorities, and has presented them in a compact and practical form, accompanied by very clear and detailed explanations. . . . The application of water as a motive power is treated very carefully and exhaustively."—*Builder.*

"For anyone who desires to begin the study of hydraulics with a consideration of the practical applications of the science there is no better guide."—*Architect.*

Statics, Graphic and Analytic.

GRAPHIC AND ANALYTIC STATICS, in their Practical Application to the Treatment of Stresses in Roofs, Solid Girders, Lattice, Bowstring and Suspension Bridges, Braced Iron Arches and Piers, and other Frameworks. By R. HUDSON GRAHAM, C.E. Containing Diagrams and Plates to Scale. With numerous Examples, many taken from existing Structures. Specially arranged for Class-work in Colleges and Universities. Second Edition, Revised and Enlarged. 8vo, 16s. cloth.

"Mr. Graham's book will find a place wherever graphic and analytic statics are used or studied.' —*Engineer.*

"The work is excellent from a practical point of view, and has evidently been prepared with much care. The directions for working are ample, and are illustrated by an abundance of well-selected examples. It is an excellent text-book for the practical draughtsman."—*Athenæum.*

Student's Text-Book on Surveying.

PRACTICAL SURVEYING: A Text-Book for Students preparing for Examination or for Survey-work in the Colonies. By GEORGE W. USILL, A.M.I.C.E., Author of "The Statistics of the Water Supply of Great Britain." With Four Lithographic Plates and upwards of 330 Illustrations. Second Edition, Revised. Crown 8vo, 7s. 6*d.* cloth.

"The best forms of instruments are described as to their construction, uses and modes of employment, and there are innumerable hints on work and equipment such as the author, in his experience as surveyor, draughtsman and teacher, has found necessary, and which the student in his inexperience will find most serviceable."—*Engineer.*

"The latest treatise in the English language on surveying, and we have no hesitation in saying that the student will find it a better guide than any of its predecessors . . . . Deserves to be recognised as the first book which should be put in the hands of a pupil of Civil Engineering, and every gentleman of education who sets out for the Colonies would find it well to have a copy."—*Architect.*

"A very useful, practical handbook on field practice. Clear, accurate and not too condensed."—*Journal of Education.*

Survey Practice.

AID TO SURVEY PRACTICE, for Reference in Surveying, Levelling, and Setting-out; and in Route Surveys of Travellers by Land and Sea. With Tables, Illustrations, and Records. By LOWIS D'A. JACKSON, A.M.I.C.E., Author of "Hydraulic Manual," "Modern Metrology," &c. Second Edition, Enlarged. Large crown 8vo, 12s. 6*d.* cloth.

"Mr. Jackson has produced a valuable *vade-mecum* for the surveyor. We can recommend this book as containing an admirable supplement to the teaching of the accomplished surveyor."—*Athenæum.*

"As a text-book we should advise all surveyors to place it in their libraries, and study well the matured instructions afforded in its pages."—*Colliery Guardian.*

"The author brings to his work a fortunate union of theory and practical experience which, aided by a clear and lucid style of writing, renders the book a very useful one."—*Builder.*

Surveying, Land and Marine.

LAND AND MARINE SURVEYING, in Reference to the Preparation of Plans for Roads and Railways; Canals, Rivers, Towns' Water Supplies; Docks and Harbours. With Description and Use of Surveying Instruments. By W. D. HASKOLL, C.E., Author of "Bridge and Viaduct Construction," &c. Second Edition, Revised, with Additions. Large cr. 8vo, 9s. cl.

"This book must prove of great value to the student. We have no hesitation in recommending it, feeling assured that it will more than repay a careful study."—*Mechanical World.*

"A most useful and well arranged book for the aid of a student. We can strongly recommend it as a carefully-written and valuable text-book. It enjoys a well-deserved repute among surveyors." —*Builder.*

"This volume cannot fail to prove of the utmost practical utility. It may be safely recommended to all students who aspire to become clean and expert surveyors."—*Mining Journal.*

Tunnelling.

PRACTICAL TUNNELLING. Explaining in detail the Setting-out of the works, Shaft-sinking and Heading-driving, Ranging the Lines and Levelling underground, Sub-Excavating, Timbering, and the Construction of the Brickwork of Tunnels, with the amount of Labour required for, and the Cost of, the various portions of the work. By FREDERICK W. SIMMS, F.G.S., M.Inst.C.E. Third Edition, Revised and Extended by D. KINNEAR CLARK, M.Inst.C.E. Imperial 8vo, with 21 Folding Plates and numerous Wood Engravings, 30s. cloth.

"The estimation in which Mr. Simms's book on tunnelling has been held for over thirty years cannot be more truly expressed than in the words of the late Prof. Rankine:—'The best source of information on the subject of tunnels is Mr. F. W. Simms's work on Practical Tunnelling.'"—*Architect.*

"It has been regarded from the first as a text book of the subject. . . . Mr. Clarke has added immensely to the value of the book."—*Engineer.*

Levelling.

A TREATISE ON THE PRINCIPLES AND PRACTICE OF LEVELLING. Showing its Application to purposes of Railway and Civil Engineering, in the Construction of Roads; with Mr. TELFORD'S Rules for the same. By FREDERICK W. SIMMS, F.G.S., M.Inst.C.E. Seventh Edition, with the addition of LAW'S Practical Examples for Setting-out Railway Curves, and TRAUTWINE'S Field Practice of Laying-out Circular Curves. With 7 Plates and numerous Woodcuts, 8vo, 8*s.* 6*d.* cloth. ⁂ TRAUTWINE on Curves may be had separate, 5*s.*

"The text-book on levelling in most of our engineering schools and colleges."—*Engineer.*

"The publishers have rendered a substantial service to the profession, especially to the younger members, by bringing out the present edition of Mr. Simms's useful work."—*Engineering.*

Heat, Expansion by.

EXPANSION OF STRUCTURES BY HEAT. By JOHN KEILY, C.E., late of the Indian Public Works and Victorian Railway Departments. Crown 8vo, 3*s.* 6*d.* cloth.

SUMMARY OF CONTENTS.

Section I. FORMULAS AND DATA.
Section II. METAL BARS.
Section III. SIMPLE FRAMES.
Section IV. COMPLEX FRAMES AND PLATES.
Section V. THERMAL CONDUCTIVITY.
Section VI. MECHANICAL FORCE OF HEAT.
Section VII. WORK OF EXPANSION AND CONTRACTION.
Section VIII. SUSPENSION BRIDGES.
Section IX. MASONRY STRUCTURES.

"The aim the author has set before him, viz., to show the effects of heat upon metallic and other structures, is a laudable one, for this is a branch of physics upon which the engineer or architect can find but little reliable and comprehensive data in books."—*Builder.*

"Whoever is concerned to know the effect of changes of temperature on such structures as suspension bridges and the like, could not do better than consult Mr. Keily's valuable and handy exposition of the geometrical principles involved in these changes."—*Scotsman.*

Practical Mathematics.

MATHEMATICS FOR PRACTICAL MEN: Being a Commonplace Book of Pure and Mixed Mathematics. Designed chiefly for the use of Civil Engineers, Architects and Surveyors. By OLINTHUS GREGORY, LL.D., F.R.A.S., Enlarged by HENRY LAW, C.E. 4th Edition, carefully Revised by J. R. YOUNG, formerly Professor of Mathematics, Belfast College. With 13 Plates, 8vo, £1 1*s.* cloth.

"The engineer or architect will here find ready to his hand rules for solving nearly every mathematical difficulty that may arise in his practice The rules are in all cases explained by means of examples, in which every step of the process is clearly worked out."—*Builder.*

"One of the most serviceable books for practical mechanics. . . It is an instructive book for the student, and a text-book for him who, having once mastered the subjects it treats of, needs occasionally to refresh his memory upon them."—*Building News.*

Hydraulic Tables.

HYDRAULIC TABLES, CO-EFFICIENTS, and FORMULÆ for finding the Discharge of Water from Orifices, Notches, Weirs, Pipes, and Rivers. With New Formulæ, Tables, and General Information on Rainfall, Catchment-Basins, Drainage, Sewerage, Water Supply for Towns and Mill Power. By JOHN NEVILLE, Civil Engineer, M.R.I.A. Third Ed., carefully Revised, with considerable Additions. Numerous Illusts. Cr. 8vo, 14*s.* cloth.

"Alike valuable to students and engineers in practice; its study will prevent the annoyance of avoidable failures, and assist them to select the readiest means of successfully carrying out any given work connected with hydraulic engineering."—*Mining Journal.*

"It is, of all English books on the subject, the one nearest to completeness. . . . From the good arrangement of the matter, the clear explanations, and abundance of formulæ, the carefully calculated tables, and, above all, the thorough acquaintance with both theory and construction, which is displayed from first to last, the book will be found to be an acquisition."—*Architect.*

Hydraulics.

HYDRAULIC MANUAL. Consisting of Working Tables and Explanatory Text. Intended as a Guide in Hydraulic Calculations and Field Operations. By LOWIS D'A. JACKSON, Author of "Aid to Survey Practice," "Modern Metrology," &c. Fourth Edition, Enlarged. Large cr. 8vo, 16*s.* cl.

"The author has had a wide experience in hydraulic engineering and has been a careful observer of the facts which have come under his notice, and from the great mass of material at his command he has constructed a manual which may be accepted as a trustworthy guide to this branch of the engineer's profession. We can heartily recommend this volume to all who desire to be acquainted with the latest development of this important subject."—*Engineering.*

"The standard-work in this department of mechnnics.'—*Scotsman.*

"The most useful feature of this work is its freedom from what is superannuated, and its thorough adoption of recent experiments; the text is, in fact, in great part a short account of the great modern experiments."—*Nature.*

Drainage.

ON THE DRAINAGE OF LANDS, TOWNS AND BUILDINGS. By G. D. Dempsey, C.E., Author of "The Practical Railway Engineer," &c. Revised, with large Additions on Recent Practice in Drainage Engineering, by D. Kinnear Clark, M.Inst.C.E. Author of "Tramways: Their Construction and Working," "A Manual of Rules, Tables, and Data for Mechanical Engineers," &c. &c. Crown 8vo, 7*s.* 6*d.* cloth.

"The new matter added to Mr. Dempsey's excellent work is characterised by the comprehensive grasp and accuracy of detail for which the name of Mr. D. K. Clark is a sufficient voucher."—*Athenæum.*

"As a work on recent practice in drainage engineering, the book is to be commended to all who are making that branch of engineering science their special study."—*Iron.*

"A comprehensive manual on drainage engineering, and a useful introduction to the student." *Building News.*

Tramways and their Working.

TRAMWAYS: THEIR CONSTRUCTION AND WORKING. Embracing a Comprehensive History of the System; with an exhaustive Analysis of the various Modes of Traction, including Horse-Power, Steam, Heated Water, and Compressed Air; a Description of the Varieties of Rolling Stock; and ample Details of Cost and Working Expenses: the Progress recently made in Tramway Construction, &c. &c. By D. Kinnear Clark, M.Inst.C.E. With over 200 Wood Engravings, and 13 Folding Plates. Two Vols., large crown 8vo, 30*s.* cloth.

"All interested in tramways must refer to it, as all railway engineers have turned to the author's work 'Railway Machinery.'"—*Engineer.*

"An exhaustive and practical work on tramways, in which the history of this kind of locomotion, and a description and cost of the various modes of laying tramways, are to be found."—*Building News.*

"The best form of rails, the best mode of construction, and the best mechanical appliances are so fairly indicated in the work under review, that any engineer about to construct a tramway will be enabled at once to obtain the practical information which will be of most service to him.'—*Athenæum.*

Oblique Arches.

A PRACTICAL TREATISE ON THE CONSTRUCTION OF OBLIQUE ARCHES. By John Hart. Third Edition, with Plates. Imperial 8vo, 8*s.* cloth.

Curves, Tables for Setting-out.

TABLES OF TANGENTIAL ANGLES AND MULTIPLES for Setting-out Curves from 5 to 200 Radius. By Alexander Beazeley, M.Inst.C.E. Third Edition. Printed on 48 Cards, and sold in a cloth box, waistcoat-pocket size, 3*s.* 6*d.*

"Each table is printed on a small card, which, being placed on the theodolite, leaves the hands free to manipulate the instrument—no small advantage as regards the rapidity of work."—*Engineer.*

"Very handy; a man may know that all his day's work must fall on two of these cards, which he puts into his own card-case, and leaves the rest behind."—*Athenæum.*

Earthwork.

EARTHWORK TABLES. Showing the Contents in Cubic Yards of Embankments, Cuttings, &c., of Heights or Depths up to an average of 80 feet. By Joseph Broadbent, C.E., and Francis Campin, C.E. Crown 8vo, 5*s.* cloth.

"The way in which accuracy is attained, by a simple division of each cross section into three elements, two in which are constant and one variable, is ingenious."—*Athenæum.*

Tunnel Shafts.

THE CONSTRUCTION OF LARGE TUNNEL SHAFTS: A Practical and Theoretical Essay. By J. H. Watson Buck, M.Inst.C.E., Resident Engineer, London and North-Western Railway. Illustrated with Folding Plates, royal 8vo, 12*s.* cloth.

"Many of the methods given are of extreme practical value to the mason; and the observations on the form of arch, the rules for ordering the stone, and the construction of the templates will be found of considerable use. We commend the book to the engineering profession."—*Building News.*

"Will be regarded by civil engineers as of the utmost value, and calculated to save much time and obviate many mistakes."—*Colliery Guardian.*

Girders, Strength of.

GRAPHIC TABLE FOR FACILITATING THE COMPUTATION OF THE WEIGHTS OF WROUGHT IRON AND STEEL GIRDERS, etc., for Parliamentary and other Estimates. By J. H. Watson Buck, M.Inst.C.E. On a Sheet, 2*s.* 6*d.*

River Engineering.

RIVER BARS: The Causes of their Formation, and their Treatment by "Induced Tidal Scour;" with a Description of the Successful Reduction by this Method of the Bar at Dublin. By I. J. MANN, Assist. Eng. to the Dublin Port and Docks Board. Royal 8vo, 7*s*. 6*d*. cloth.

"We recommend all interested in harbour works—and, indeed, those concerned in the improvements of rivers generally—to read Mr. Mann's interesting work on the treatment of river bars."—*Engineer.*

Trusses.

TRUSSES OF WOOD AND IRON. Practical Applications of Science in Determining the Stresses, Breaking Weights, Safe Loads, Scantlings, and Details of Construction, with Complete Working Drawings. By WILLIAM GRIFFITHS, Surveyor, Assistant Master, Tranmere School of Science and Art. Oblong 8vo, 4*s*. 6*d*. cloth.

"This handy little book enters so minutely into every detail connected with the construction of roof trusses, that no student need be ignorant of these matters."—*Practical Engineer.*

Railway Working.

SAFE RAILWAY WORKING. A Treatise on Railway Accidents: Their Cause and Prevention; with a Description of Modern Appliances and Systems. By CLEMENT E. STRETTON, C.E., Vice-President and Consulting Engineer, Amalgamated Society of Railway Servants. With Illustrations and Coloured Plates. Second Edition, Enlarged. Crown 8vo, 3*s*. 6*d*. cloth. [*Just published.*

"A book for the engineer, the directors, the managers; and, in short, all who wish for information on railway matters will find a perfect encyclopædia in 'Safe Railway Working.'"—*Railway Review.*

"We commend the remarks on railway signalling to all railway managers, especially where a uniform code and practice is advocated."—*Herepath's Railway Journal.*

"The author may be congratulated on having collected, in a very convenient form, much valuable information on the principal questions affecting the safe working of railways."—*Railway Engineer.*

Field-Book for Engineers.

THE ENGINEER'S, MINING SURVEYOR'S, AND CONTRACTOR'S FIELD-BOOK. Consisting of a Series of Tables, with Rules, Explanations of Systems, and use of Theodolite for Traverse Surveying and Plotting the Work with minute accuracy by means of Straight Edge and Set Square only; Levelling with the Theodolite, Casting-out and Reducing Levels to Datum, and Plotting Sections in the ordinary manner; setting-out Curves with the Theodolite by Tangential Angles and Multiples, with Right and Left-hand Readings of the Instrument: Setting-out Curves without Theodolite, on the System of Tangential Angles by sets of Tangents and Offsets; and Earthwork Tables to 80 feet deep, calculated for every 6 inches in depth. By W. DAVIS HASKOLL, C.E. With numerous Woodcuts. Fourth Edition, Enlarged. Crown 8vo, 12*s*. cloth.

"The book is very handy; the separate tables of sines and tangents to every minute will make it useful for many other purposes, the genuine traverse tables existing all the same."—*Athenæum.*

"Every person engaged in engineering field operations will estimate the importance of such a work and the amount of valuable time which will be saved by reference to a set of reliable tables prepared with the accuracy and fulness of those given in this volume."—*Railway News.*

Earthwork, Measurement of.

A MANUAL ON EARTHWORK. By ALEX. J. S. GRAHAM, C.E. With numerous Diagrams. Second Edition. 18mo, 2*s*. 6*d*. cloth.

"A great amount of practical information, very admirably arranged, and available for rough estimates, as well as for the more exact calculations required in the engineer's and contractor's offices."—*Artizan.*

Strains in Ironwork.

THE STRAINS ON STRUCTURES OF IRONWORK; with Practical Remarks on Iron Construction. By F. W. SHEILDS, M.Inst.C.E. Second Edition, with 5 Plates. Royal 8vo, 5*s*. cloth.

The student cannot find a better little book on this subject."—*Engineer.*

Cast Iron and other Metals, Strength of.

A PRACTICAL ESSAY ON THE STRENGTH OF CAST IRON AND OTHER METALS. By THOMAS TREDGOLD, C.E. Fifth Edition, including HODGKINSON'S Experimental Researches. 8vo, 12*s*. cloth.

ARCHITECTURE, BUILDING, etc.

Construction.

THE SCIENCE OF BUILDING : An Elementary Treatise on the Principles of Construction. By E. Wyndham Tarn, M.A., Architect. Third Edition, Enlarged, with 59 Engravings. Fcap. 8vo, 4*s.* cloth.

"A very valuable book, which we strongly recommend to all students."—*Builder.*

"No architectural student should be without this handbook."—*Architect.*

Villa Architecture.

A HANDY BOOK OF VILLA ARCHITECTURE : Being a Series of Designs for Villa Residences in various Styles. With Outline Specifications and Estimates. By C. Wickes, Author of "The Spires and Towers of England," &c. 61 Plates, 4to, £1 11*s.* 6*d.* half-morocco, gilt edges.

"The whole of the designs bear evidence of their being the work of an artistic architect, and they will prove very valuable and suggestive."—*Building News.*

Text-Book for Architects.

THE ARCHITECT'S GUIDE: Being a Text-Book of Useful Information for Architects, Engineers, Surveyors, Contractors, Clerks of Works, &c. &c. By Frederick Rogers, Architect, Author of "Specifications for Practical Architecture," &c. Second Edition, Revised and Enlarged. With numerous Illustrations. Crown 8vo, 6*s.* cloth.

"As a text-book of useful information for architects, engineers, surveyors, &c., it would be hard to find a handier or more complete little volume."—*Standard.*

"A young architect could hardly have a better guide-book."—*Timber Trades Journal.*

Taylor and Cresy's Rome.

THE ARCHITECTURAL ANTIQUITIES OF ROME. By the late G. L. Taylor, Esq., F.R.I.B.A., and Edward Cresy, Esq. New Edition, thoroughly Revised by the Rev. Alexander Taylor, M.A. (son of the late G. L. Taylor, Esq.), Fellow of Queen's College, Oxford, and Chaplain of Gray's Inn. Large folio, with 130 Plates, half-bound, £3 3*s.*

"Taylor and Cresy's work has from its first publication been ranked among those professional books which cannot be bettered. . . . It would be difficult to find examples of drawings, even among those of the most painstaking students of Gothic, more thoroughly worked out than are the one hundred and thirty plates in this volume."—*Architect.*

Linear Perspective.

ARCHITECTURAL PERSPECTIVE : The whole Course and Operations of the Draughtsman in Drawing a Large House in Linear Perspective. Illustrated by 39 Folding Plates. By F. O. Ferguson. Demy 8vo, 3*s.* 6*d.* boards. [*Just published.*

Architectural Drawing.

PRACTICAL RULES ON DRAWING, for the Operative Builder and Young Student in Architecture. By George Pyne. With 14 Plates, 4to, 7*s.* 6*d.* boards.

Sir Wm. Chambers on Civil Architecture.

THE DECORATIVE PART OF CIVIL ARCHITECTURE. By Sir William Chambers, F.R.S. With Portrait, Illustrations, Notes, and an Examination of Grecian Architecture, by Joseph Gwilt, F.S.A. Revised and Edited by W. H. Leeds, with a Memoir of the Author. 66 Plates, 4to, 21*s.* cloth.

House Building and Repairing.

THE HOUSE-OWNER'S ESTIMATOR ; or, What will it Cost to Build, Alter, or Repair? A Price Book adapted to the Use of Unprofessional People, as well as for the Architectural Surveyor and Builder. By James D. Simon, A.R.I.B.A. Edited and Revised by Francis T. W Miller, A.R.I.B.A. With numerous Illustrations. Fourth Edition, Revised. Crown 8vo, 3*s.* 6*d.* cloth.

"In two years it will repay its cost a hundred times over."—*Field.*

Cottages and Villas.

COUNTRY AND SUBURBAN COTTAGES AND VILLAS: How to Plan and Build Them. Containing 33 Plates, with Introduction, General Explanations, and Description of each Plate. By James W. Bogue, Architect, Author of "Domestic Architecture," &c. 4to, 10*s.* 6*d.* cloth.

The New Builder's Price Book, 1891.

LOCKWOOD'S BUILDER'S PRICE BOOK FOR 1891. A Comprehensive Handbook of the Latest Prices and Data for Builders, Architects, Engineers and Contractors. Re-constructed, Re-written and Greatly Enlarged. By FRANCIS T. W. MILLER. 640 closely-printed pages, crown 8vo, 4s. cloth. [*Just published.*

"This book is a very useful one, and should find a place in every English office connected with the building and engineering professions."—*Industries.*

"This Price Book has been set up in new type. . . . Advantage has been taken of the transformation to add much additional information, and the volume is now an excellent book of reference."—*Architect.*

"In its new and revised form this Price Book is what a work of this kind should be—comprehensive, reliable, well arranged, legible and well bound."—*British Architect.*

"A work of established reputation."—*Athenæum.*

"This very useful handbook is well written, exceedingly clear in its explanations and great care has evidently been taken to ensure accuracy."—*Morning Advertiser*

Designing, Measuring, and Valuing.

THE STUDENT'S GUIDE to the PRACTICE of MEASURING AND VALUING ARTIFICERS' WORKS. Containing Directions for taking Dimensions, Abstracting the same, and bringing the Quantities into Bill, with Tables of Constants for Valuation of Labour, and for the Calculation of Areas and Solidities. Originally edited by EDWARD DOBSON, Architect. With Additions on Mensuration and Construction, and a New Chapter on Dilapidations, Repairs, and Contracts, by E. WYNDHAM TARN, M.A. Sixth Edition, including a Complete Form of a Bill of Quantities. With 8 Plates and 63 Woodcuts. Crown 8vo, 7s. 6*d.* cloth.

"Well fulfils the promise of its title-page, and we can thoroughly recommend it to the class for whose use it has been compiled. Mr. Tarn's additions and revisions have much increased the usefulness of the work, and have especially augmented its value to students."—*Engineering.*

"This edition will be found the most complete treatise on the principles of measuring and valuing artificers' work that has yet been published."—*Building News.*

Pocket Estimator and Technical Guide.

THE POCKET TECHNICAL GUIDE, MEASURER AND ESTIMATOR FOR BUILDERS AND SURVEYORS. Containing Technical Directions for Measuring Work in all the Building Trades, Complete Specifications for Houses, Roads, and Drains, and an easy Method of Estimating the parts of a Building collectively. By A. C. BEATON, Author of "Quantities and Measurements," &c. Fifth Edition. With 53 Woodcuts, waistcoat-pocket size, 1s. 6*d.* gilt edges.

"No builder, architect, surveyor, or valuer should be without his 'Beaton.'"—*Building News.*

"Contains an extraordinary amount of information in daily requisition in measuring and estimating. Its presence in the pocket will save valuable time and trouble."—*Building World.*

Donaldson on Specifications.

THE HANDBOOK OF SPECIFICATIONS; or, Practical Guide to the Architect, Engineer, Surveyor, and Builder, in drawing up Specifications and Contracts for Works and Constructions. Illustrated by Precedents of Buildings actually executed by eminent Architects and Engineers. By Professor T. L. DONALDSON, P.R.I.B.A., &c. New Edition, in One large Vol., 8vo, with upwards of 1,000 pages of Text, and 33 Plates, £1 11*s.* 6*d.* cloth.

"In this work forty-four specifications of executed works are given, including the specifications for parts of the new Houses of Parliament, by Sir Charles Barry, and for the new Royal Exchange, by Mr. Tite, M.P. The latter, in particular, is a very complete and remarkable document. It embodies, to a great extent, as Mr. Donaldson mentions, 'the bill of quantities with the description of the works.' . . . It is valuable as a record, and more valuable still as a book of precedents. . . . Suffice it to say that Donaldson's 'Handbook of Specifications' must be bought by all architects."—*Builder.*

Bartholomew and Rogers' Specifications.

SPECIFICATIONS FOR PRACTICAL ARCHITECTURE. A Guide to the Architect, Engineer, Surveyor, and Builder. With an Essay on the Structure and Science of Modern Buildings. Upon the Basis of the Work by ALFRED BARTHOLOMEW, thoroughly Revised, Corrected, and greatly added to by FREDERICK ROGERS, Architect. Second Edition, Revised, with Additions. With numerous Illustrations, medium 8vo, 15*s.* cloth.

"The collection of specifications prepared by Mr. Rogers on the basis of Bartholomew's work is too well known to need any recommendation from us. It is one of the books with which every young architect must be equipped; for time has shown that the specifications cannot be set aside through any defect in them."—*Architect.*

Building; Civil and Ecclesiastical.

A BOOK ON BUILDING, Civil and Ecclesiastical, including Church Restoration; with the Theory of Domes and the Great Pyramid, &c. By Sir EDMUND BECKETT, Bart., LL.D., F.R.A.S., Author of "Clocks and Watches, and Bells," &c. Second Edition, Enlarged. Fcap. 8vo, 5*s.* cloth.

"A book which is always amusing and nearly always instructive. The style throughout is in the highest degree condensed and epigrammatic."—*Times.*

Ventilation of Buildings.

VENTILATION. A Text Book to the Practice of the Art of Ventilating Buildings. With a Chapter upon Air Testing. By W. P. BUCHAN, R.P., Sanitary and Ventilating Engineer, Author of "Plumbing," &c. With 170 Illustrations. 12mo, 4*s.* cloth boards. [*Just published.*

The Art of Plumbing.

PLUMBING. A Text Book to the Practice of the Art or Craft of the Plumber, with Supplementary Chapters on House Drainage, embodying the latest Improvements. By WILLIAM PATON BUCHAN, R.P., Sanitary Engineer and Practical Plumber. Fifth Edition, Enlarged to 370 pages, and 380 Illustrations. 12mo, 4*s.* cloth boards.

"A text book which may be safely put in the hands of every young plumber, and which will also be found useful by architects and medical professors."—*Builder.*

"A valuable text book, and the only treatise which can be regarded as a really reliable manual of the plumber's art."—*Building News.*

Geometry for the Architect, Engineer, etc.

PRACTICAL GEOMETRY, for the Architect, Engineer and Mechanic. Giving Rules for the Delineation and Application of various Geometrical Lines, Figures and Curves. By E. W. TARN, M.A., Architect, Author of "The Science of Building," &c. Second Edition. With 172 Illustrations, demy 8vo, 9*s.* cloth.

"No book with the same objects in view has ever been published in which the clearness of the rules laid down and the illustrative diagrams have been so satisfactory."—*Scotsman.*

The Science of Geometry.

THE GEOMETRY OF COMPASSES; or, Problems Resolved by the mere Description of Circles, and the use of Coloured Diagrams and Symbols. By OLIVER BYRNE. Coloured Plates. Crown 8vo, 3*s.* 6*d.* cloth.

"The treatise is a good one, and remarkable—like all Mr. Byrne's contributions to the science of geometry—for the lucid character of its teaching."—*Building News.*

DECORATIVE ARTS, etc.

Woods and Marbles (Imitation of).

SCHOOL OF PAINTING FOR THE IMITATION OF WOODS AND MARBLES, as Taught and Practised by A. R. VAN DER BURG and P. VAN DER BURG, Directors of the Rotterdam Painting Institution. Royal folio, 18½ by 12½ in., Illustrated with 24 full-size Coloured Plates; also 12 plain Plates, comprising 154 Figures. Second and Cheaper Edition. Price £1 11*s.* 6*d.*

List of Plates.

1. Various Tools required for Wood Painting—2, 3. Walnut: Preliminary Stages of Graining and Finished Specimen—4. Tools used for Marble Painting and Method of Manipulation—5, 6. St. Remi Marble: Earlier Operations and Finished Specimen—7. Methods of Sketching different Grains, Knots, &c.—8, 9. Ash: Preliminary Stages and Finished Specimen—10. Methods of Sketching Marble Grains—11, 12. Breche Marble: Preliminary Stages of Working and Finished Specimen—13. Maple: Methods of Producing the different Grains—14, 15. Bird's-eye Maple: Preliminary Stages and Finished Specimen—16. Methods of Sketching the different Species of White Marble—17, 18. White Marble: Preliminary Stages of Process and Finished Specimen—19. Mahogany: Specimens of various Grains and Methods of Manipulation—20, 21. Mahogany: Earlier Stages and Finished Specimen—22, 23, 24. Sienna Marble: Varieties of Grain, Preliminary Stages and Finished Specimen—25, 26, 27. Juniper Wood: Methods of producing Grain, &c.: Preliminary Stages and Finished Specimen—28, 29, 30. Vert de Mer Marble: Varieties of Grain and Methods of Working Unfinished and Finished Specimens—31, 32, 33. Oak: Varieties of Grain, Tools Employed, and Methods of Manipulation, Preliminary Stages and Finished Specimen—34, 35, 36. Waulsort Marble: Varieties of Grain, Unfinished and Finished Specimens.

*** OPINIONS OF THE PRESS.

"Those who desire to attain skill in the art of painting woods and marbles will find advantage in consulting this book. . . . Some of the Working Men's Clubs should give their young men the opportunity to study it."—*Builder.*

"A comprehensive guide to the art. The explanations of the processes, the manipulation and management of the colours, and the beautifully executed plates will not be the least valuable to the student who aims at making his work a faithful transcript of nature."—*Building News.*

House Decoration.

ELEMENTARY DECORATION. A Guide to the Simpler Forms of Everyday Art, as applied to the Interior and Exterior Decoration of Dwelling Houses, &c. By James W. Facey, Jun. With 68 Cuts. 12mo, 2*s.* cloth limp.

PRACTICAL HOUSE DECORATION: A Guide to the Art of Ornamental Painting, the Arrangement of Colours in Apartments, and the principles of Decorative Design. With some Remarks upon the Nature and Properties of Pigments. By James William Facey, Author of "Elementary Decoration," &c. With numerous Illustrations. 12mo, 2*s.* 6*d.* cloth limp.

N.B.—The above Two Works together in One Vol., strongly half-bound, 5*s.*

Colour.

A GRAMMAR OF COLOURING. Applied to Decorative Painting and the Arts. By George Field. New Edition, Revised, Enlarged, and adapted to the use of the Ornamental Painter and Designer. By Ellis A. Davidson. With New Coloured Diagrams and Engravings. 12mo, 3*s.* 6*d.* cloth boards.

"The book is a most useful *resume* of the properties of pigments."—*Builder.*

House Painting, Graining, etc.

HOUSE PAINTING, GRAINING, MARBLING, AND SIGN WRITING, A Practical Manual of. By Ellis A. Davidson. Sixth Edition. With Coloured Plates and Wood Engravings. 12mo, 6*s.* cloth boards.

"A mass of information, of use to the amateur and of value to the practical man."—*English Mechanic.*

"Simply invaluable to the youngster entering upon this particular calling, and highly serviceable to the man who is practising it."—*Furniture Gazette.*

Decorators, Receipts for.

THE DECORATOR'S ASSISTANT: A Modern Guide to Decorative Artists and Amateurs, Painters, Writers, Gilders, &c. Containing upwards of 600 Receipts, Rules and Instructions; with a variety of Information for General Work connected with every Class of Interior and Exterior Decorations, &c. Fourth Edition, Revised. 152 pp., crown 8vo, 1*s.* in wrapper.

"Full of receipts of value to decorators, painters, gilders, &c. The book contains the gist of larger treatises on colour and technical processes. It would be difficult to meet with a work so full of varied information on the painter's art."—*Building News.*

"We recommend the work to all who, whether for pleasure or profit, require a guide to decoration."—*Plumber and Decorator.*

Moyr Smith on Interior Decoration.

ORNAMENTAL INTERIORS, ANCIENT AND MODERN. By J. Moyr Smith. Super-royal 8vo, with 32 full-page Plates and numerous smaller Illustrations, handsomely bound in cloth, gilt top, price 18*s.*

"The book is well illustrated and handsomely got up, and contains some true criticism and a good many good examples of decorative treatment."—*The Builder.*

"This is the most elaborate and beautiful work on the artistic decoration of interiors that we have seen. . . . The scrolls, panels and other designs from the author's own pen are very beautiful and chaste; but he takes care that the designs of other men shall figure even more than his own."—*Liverpool Albion.*

"To all who take an interest in elaborate domestic ornament this handsome volume will be elcome."—*Graphic.*

British and Foreign Marbles.

MARBLE DECORATION and the Terminology of British and Foreign Marbles. A Handbook for Students. By George H. Blagrove, Author of "Shoring and its Application," &c. With 28 Illustrations. Crown 8vo, 3*s.* 6*d.* cloth.

"This most useful and much wanted handbook should be in the hands of every architect and builder."—*Building World.*

"It is an excellent manual for students, and interesting to artistic readers generally."—*Saturday Review.*

"A carefully and usefully written treatise; the work is essentially practical."—*Scotsman.*

Marble Working, etc.

MARBLE AND MARBLE WORKERS: A Handbook for Architects, Artists, Masons and Students. By Arthur Lee, Author of "A Visit to Carrara," "The Working of Marble," &c. Small crown 8vo, 2*s.* cloth.

"A really valuable addition to the technical literature of archi ects and masons."—*Building News.*

DELAMOTTE'S WORKS ON ILLUMINATION AND ALPHABETS.

A PRIMER OF THE ART OF ILLUMINATION, for the Use of Beginners: with a Rudimentary Treatise on the Art, Practical Directions for its exercise, and Examples taken from Illuminated MSS., printed in Gold and Colours. By F. DELAMOTTE. New and Cheaper Edition. Small 4to, 6s. ornamental boards.

"The examples of ancient MSS. recommended to the student, which, with much good sense, the author chooses from collections accessible to all, are selected with judgment and knowledge, as well as taste."—*Athenæum.*

ORNAMENTAL ALPHABETS, Ancient and Mediæval, from the Eighth Century, with Numerals; including Gothic, Church-Text, large and small, German, Italian, Arabesque, Initials for Illumination, Monograms, Crosses, &c. &c., for the use of Architectural and Engineering Draughtsmen, Missal Painters, Masons, Decorative Painters, Lithographers, Engravers, Carvers, &c. &c. Collected and Engraved by F. DELAMOTTE, and printed in Colours. New and Cheaper Edition. Royal 8vo, oblong, 2s. 6*d.* ornamental boards.

"For those who insert enamelled sentences round gilded chalices, who blazon shop legends over shop-doors, who letter church walls with pithy sentences from the Decalogue, this book will be useful."—*Athenæum.*

EXAMPLES OF MODERN ALPHABETS, Plain and Ornamental; including German, Old English, Saxon, Italic, Perspective, Greek, Hebrew, Court Hand, Engrossing, Tuscan, Riband, Gothic, Rustic, and Arabesque; with several Original Designs, and an Analysis of the Roman and Old English Alphabets, large and small, and Numerals, for the use of Draughtsmen, Surveyors, Masons, Decorative Painters, Lithographers, Engravers, Carvers, &c. Collected and Engraved by F. DELAMOTTE, and printed in Colours. New and Cheaper Edition. Royal 8vo, oblong, 2s. 6*d.* ornamental boards.

"There is comprised in it every possible shape into which the letters of the alphabet and numerals can be formed, and the talent which has been expended in the conception of the various plain and ornamental letters is wonderful."—*Standard.*

MEDIÆVAL ALPHABETS AND INITIALS FOR ILLUMINATORS. By F. G. DELAMOTTE. Containing 21 Plates and Illuminated Title, printed in Gold and Colours. With an Introduction by J. WILLIS BROOKS. Fourth and Cheaper Edition. Small 4to, 4*s.* ornamental boards.

"A volume in which the letters of the alphabet come forth glorified in gilding and all the colours of the prism interwoven and intertwined and intermingled."—*Sun.*

THE EMBROIDERER'S BOOK OF DESIGN. Containing Initials, Emblems, Cyphers, Monograms, Ornamental Borders, Ecclesiastical Devices, Mediæval and Modern Alphabets, and National Emblems. Collected by F. DELAMOTTE, and printed in Colours. Oblong royal 8vo, 1*s.* 6*d.* ornamental wrapper.

"The book will be of great assistance to ladies and young children who are endowed with the art of plying the needle in this most ornamental and useful pretty work."—*East Anglian Times.*

Wood Carving.

INSTRUCTIONS IN WOOD-CARVING, for Amateurs; with Hints on Design. By A LADY. With Ten Plates. New and Cheaper Edition. Crown 8vo, 2*s.* in emblematic wrapper.

"The handicraft of the wood-carver, so well as a book can impart it, may be learnt from 'A Lady's' publication."—*Athenæum.*

"The directions given are plain and easily understood."—*English Mechanic.*

Glass Painting.

GLASS STAINING AND THE ART OF PAINTING ON GLASS. From the German of Dr. GESSERT and EMANUEL OTTO FROMBERG. With an Appendix on THE ART OF ENAMELLING. 12mo, 2*s.* 6*d.* cloth limp.

Letter Painting.

THE ART OF LETTER PAINTING MADE EASY. By JAMES GREIG BADENOCH. With 12 full-page Engravings of Examples, 1*s.* 6*d.* cloth limp.

"The system is a simple one, but quite original, and well worth the careful attention of letter painters. It can be easily mastered and remembered."—*Building News.*

CARPENTRY, TIMBER, etc.

Tredgold's Carpentry, Revised & Enlarged by Tarn.

THE ELEMENTARY PRINCIPLES OF CARPENTRY. A Treatise on the Pressure and Equilibrium of Timber Framing, the Resistance of Timber, and the Construction of Floors, Arches, Bridges, Roofs, Uniting Iron and Stone with Timber, &c. To which is added an Essay on the Nature and Properties of Timber, &c., with Descriptions of the kinds of Wood used in Building; also numerous Tables of the Scantlings of Timber for different purposes, the Specific Gravities of Materials, &c. By THOMAS TREDGOLD, C.E. With an Appendix of Specimens of Various Roofs of Iron and Stone, Illustrated. Seventh Edition, thoroughly revised and considerably enlarged by E. WYNDHAM TARN, M.A., Author of "The Science of Building," &c. With 61 Plates, Portrait of the Author, and several Woodcuts. In one large vol., 4to, price £1 5*s*. cloth.

"Ought to be in every architect's and every builder's library."—*Builder*.

"A work whose monumental excellence must commend it wherever skilful carpentry is concerned. The author's principles are rather confirmed than impaired by time. The additional plates are of great intrinsic value."—*Building News*.

Woodworking Machinery.

WOODWORKING MACHINERY: Its Rise, Progress, and Construction. With Hints on the Management of Saw Mills and the Economical Conversion of Timber. Illustrated with Examples of Recent Designs by leading English, French, and American Engineers. By M. POWIS BALE, A.M.Inst.C.E., M.I.M.E. Large crown 8vo, 12*s*. 6*d*. cloth.

"Mr. Bale is evidently an expert on the subject and he has collected so much information that his book is all-sufficient for builders and others engaged in the conversion of timber."—*Architect*.

"The most comprehensive compendium of wood-working machinery we have seen. The author is a thorough master of his subject."—*Building News*.

"The appearance of this book at the present time will, we should think, give a considerable impetus to the onward march of the machinist engaged in the designing and manufacture of wood-working machines. It should be in the office of every wood-working factory."—*English Mechanic*.

Saw Mills.

SAW MILLS: Their Arrangement and Management, and the Economical Conversion of Timber. (A Companion Volume to "Woodworking Machinery.") By M. POWIS BALE. With numerous Illustrations. Crown 8vo, 10*s*. 6*d*. cloth.

"The *administration* of a large sawing establishment is discussed, and the subject examined from a financial standpoint. We could not desire a more complete or practical treatise."—*Builder*.

"We highly recommend Mr. Bale's work to the attention and perusal of all those who are engaged in the art of wood conversion, or who are about building or remodelling saw-mills on improved principles."—*Building News*.

Carpentering.

THE CARPENTER'S NEW GUIDE; or, Book of Lines for Carpenters; comprising all the Elementary Principles essential for acquiring a knowledge of Carpentry. Founded on the late PETER NICHOLSON'S Standard Work. A New Edition, Revised by ARTHUR ASHPITEL, F.S.A. Together with Practical Rules on Drawing, by GEORGE PYNE. With 74 Plates, 4to, £1 1*s*. cloth.

Handrailing and Stairbuilding.

A PRACTICAL TREATISE ON HANDRAILING: Showing New and Simple Methods for Finding the Pitch of the Plank, Drawing the Moulds, Bevelling, Jointing-up, and Squaring the Wreath. By GEORGE COLLINGS. Second Edition, Revised and Enlarged, to which is added A TREATISE ON STAIRBUILDING. With Plates and Diagrams. 12mo, 2*s*. 6*d*. cloth limp.

"Will be found of practical utility in the execution of this difficult branch of joinery."—*Builder*.

"Almost every difficult phase of this somewhat intricate branch of joinery is elucidated by the aid of plates and explanatory letterpress."—*Furniture Gazette*.

Circular Work.

CIRCULAR WORK IN CARPENTRY AND JOINERY: A Practical Treatise on Circular Work of Single and Double Curvature. By GEORGE COLLINGS, Author of "A Practical Treatise on Handrailing." Illustrated with numerous Diagrams. Second Edition. 12mo, 2*s*. 6*d*. cloth limp.

"An excellent example of what a book of this kind should be. Cheap in price, clear in definition and practical in the examples selected."—*Builder*.

Timber Merchant's Companion.

THE TIMBER MERCHANT'S AND BUILDER'S COMPANION. Containing New and Copious Tables of the Reduced Weight and Measurement of Deals and Battens, of all sizes, from One to a Thousand Pieces, and the relative Price that each size bears per Lineal Foot to any given Price per Petersburg Standard Hundred; the Price per Cube Foot of Square Timber to any given Price per Load of 50 Feet; the proportionate Value of Deals and Battens by the Standard, to Square Timber by the Load of 50 Feet; the readiest mode of ascertaining the Price of Scantling per Lineal Foot of any size, to any given Figure per Cube Foot, &c. &c. By WILLIAM DOWSING. Fourth Edition, Revised and Corrected. Cr. 8vo, 3s. cl.

"We are glad to see a fourth edition of these admirable tables, which for correctness and simplicity of arrangement leave nothing to be desired."—*Timber Trades Journal.*

"An exceedingly well-arranged, clear, and concise manual of tables for the use of all who buy or sell timber."—*Journal of Forestry.*

Practical Timber Merchant.

THE PRACTICAL TIMBER MERCHANT. Being a Guide for the use of Building Contractors, Surveyors, Builders, &c., comprising useful Tables for all purposes connected with the Timber Trade, Marks of Wood, Essay on the Strength of Timber, Remarks on the Growth of Timber, &c. By W. RICHARDSON. Fcap. 8vo, 3s. 6*d.* cloth.

"This handy manual contains much valuable information for the use of timber merchants, builders, foresters, and all others connected with the growth, sale, and manufacture of timber."—*Journal of Forestry.*

Timber Freight Book.

THE TIMBER MERCHANT'S, SAW MILLER'S, AND IMPORTER'S FREIGHT BOOK AND ASSISTANT. Comprising Rules, Tables, and Memoranda relating to the Timber Trade. By WILLIAM RICHARDSON, Timber Broker; together with a Chapter on "SPEEDS OF SAW MILL MACHINERY," by M. POWIS BALE, M.I.M.E., &c. 12mo, 3s. 6*d.* cl. boards.

"A very useful manual of rules, tables, and memoranda relating to the timber trade. We recommend it as a compendium of calculation to all timber measurers and merchants, and as supplying a real want in the trade."—*Building News.*

Packing-Case Makers, Tables for.

PACKING-CASE TABLES; showing the number of Superficial Feet in Boxes or Packing-Cases, from six inches square and upwards. By W. RICHARDSON, Timber Broker. Third Edition. Oblong 4to, 3s. 6*d.* cl.

"Invaluable labour-saving tables."—*Ironmonger.*

"Will save much labour and calculation."—*Grocer.*

Superficial Measurement.

THE TRADESMAN'S GUIDE TO SUPERFICIAL MEASUREMENT. Tables calculated from 1 to 200 inches in length, by 1 to 108 inches in breadth. For the use of Architects, Surveyors, Engineers, Timber Merchants, Builders, &c. By JAMES HAWKINGS. Third Edition. Fcap., 3s. 6*d.* cloth.

"A useful collection of tables to facilitate rapid calculation of surfaces. The exact area of any surface of which the limits have been ascertained can be instantly determined. The book will be found of the greatest utility to all engaged in building operations."—*Scotsman.*

"These tables will be found of great assistance to all who require to make calculations in superficial measurement."—*English Mechanic.*

Forestry.

THE ELEMENTS OF FORESTRY. Designed to afford Information concerning the Planting and Care of Forest Trees for Ornament or Profit, with Suggestions upon the Creation and Care of Woodlands. By F. B. HOUGH. Large crown 8vo, 10s. cloth.

Timber Importer's Guide.

THE TIMBER IMPORTER'S, TIMBER MERCHANT'S AND BUILDER'S STANDARD GUIDE. By RICHARD E. GRANDY. Comprising an Analysis of Deal Standards, Home and Foreign, with Comparative Values and Tabular Arrangements for fixing Nett Landed Cost on Baltic and North American Deals, including all intermediate Expenses, Freight, Insurance, &c. &c. Together with copious Information for the Retailer and Builder. Third Edition, Revised. 12mo, 2s. cloth limp.

"Everything it pretends to be: built up gradually, it leads one from a forest to a treenail, and throws in, as a makeweight, a host of material concerning bricks, columns, cisterns, &c."—*English Mechanic.*

MARINE ENGINEERING, NAVIGATION, etc.

Chain Cables.

CHAIN CABLES AND CHAINS. Comprising Sizes and Curves of Links, Studs, &c., Iron for Cables and Chains, Chain Cable and Chain Making, Forming and Welding Links, Strength of Cables and Chains, Certificates for Cables, Marking Cables, Prices of Chain Cables and Chains, Historical Notes, Acts of Parliament, Statutory Tests, Charges for Testing, List of Manufacturers of Cables, &c. &c. By THOMAS W. TRAILL, F.E.R.N., M. Inst. C.E., Engineer Surveyor in Chief, Board of Trade, Inspector of Chain Cable and Anchor Proving Establishments, and General Superintendent, Lloyd's Committee on Proving Establishments. With numerous Tables, Illustrations and Lithographic Drawings. Folio, £2 2*s.* cloth, bevelled boards.

"It contains a vast amount of valuable information. Nothing seems to be wanting to make it a complete and standard work of reference on the subject."—*Nautical Magazine.*

Marine Engineering.

MARINE ENGINES AND STEAM VESSELS (A Treatise on). By ROBERT MURRAY, C.E. Eighth Edition, thoroughly Revised, with considerable Additions by the Author and by GEORGE CARLISLE, C.E., Senior Surveyor to the Board of Trade at Liverpool. 12mo, 5*s.* cloth boards.

"Well adapted to give the young steamship engineer or marine engine and boiler maker a general introduction into his practical work."—*Mechanical World.*

"We feel sure that this thoroughly revised edition will continue to be as popular in the future as it has been in the past, as, for its size, it contains more useful information than any similar treatise."—*Industries.*

The information given is both sound and sensible, and well qualified to direct young sea-going hands on the straight road to the extra chief's certificate. Most useful to surveyors, inspectors, draughtsmen, and all young engineers who take an interest in their profession."—*Glasgow Herald.*

"An indispensable manual for the student of marine engineering."—*Liverpool Mercury.*

Pocket-Book for Naval Architects and Shipbuilders.

THE NAVAL ARCHITECT'S AND SHIPBUILDER'S POCKET-BOOK of Formulæ, Rules, and Tables, and MARINE ENGINEER'S AND SURVEYOR'S Handy Book of Reference. By CLEMENT MACKROW, Member of the Institution of Naval Architects, Naval Draughtsman. Fourth Edition, Revised. With numerous Diagrams, &c. Fcap., 12*s.* 6*d.* strongly bound in leather.

"Will be found to contain the most useful tables and formulæ required by shipbuilders, carefully collected from the best authorities, and put together in a popular and simple form."—*Engineer.*

"The professional shipbuilder has now, in a convenient and accessible form, reliable data for solving many of the numerous problems that present themselves in the course of his work."—*Iron.*

"There is scarcely a subject on which a naval architect or shipbuilder can require to refresh his memory which will not be found within the covers of Mr. Mackrow's book."—*English Mechanic.*

Pocket-Book for Marine Engineers.

A POCKET-BOOK OF USEFUL TABLES AND FORMULÆ FOR MARINE ENGINEERS. By FRANK PROCTOR, A.I.N.A. Third Edition. Royal 32mo, leather, gilt edges, with strap, 4*s.*

"We recommend it to our readers as going far to supply a long-felt want."—*Naval Science.*

"A most useful companion to all marine engineers."—*United Service Gazette.*

Introduction to Marine Engineering.

ELEMENTARY ENGINEERING: A Manual for Young Marine Engineers and Apprentices. In the Form of Questions and Answers on Metals, Alloys, Strength of Materials, Construction and Management of Marine Engines and Boilers, Geometry, &c. &c. With an Appendix of Useful Tables. By JOHN SHERREN BREWER, Government Marine Surveyor, Hong-kong. Small crown 8vo, 2*s.* cloth.

"Contains much valuable information for the class for whom it is intended, especially in the chapters on the management of boilers and engines."—*Nautical Magazine.*

"A useful introduction to the more elaborate text books."—*Scotsman.*

"To a student who has the requisite desire and resolve to attain a thorough knowledge, Mr. Brewer offers decidedly useful help."—*Athenæum.*

Navigation.

PRACTICAL NAVIGATION. Consisting of THE SAILOR'S SEA-BOOK, by JAMES GREENWOOD and W. H. ROSSER; together with the requisite Mathematical and Nautical Tables for the Working of the Problems, by HENRY LAW, C.E., and Professor J. R. YOUNG. Illustrated. 12mo, 7*s.* strongly half-bound.

MINING AND METALLURGY.

Metalliferous Mining in the United Kingdom.

BRITISH MINING: A Treatise on the History, Discovery, Practical Development, and Future Prospects of Metalliferous Mines in the United Kingdom. By ROBERT HUNT, F.R.S., Keeper of Mining Records; Editor of "Ure's Dictionary of Arts, Manufactures, and Mines," &c. Upwards of 950 pp., with 230 Illustrations. Second Edition, Revised. Super-royal 8vo, £2 2s. cloth.

"One of the most valuable works of reference of modern times. Mr. Hunt, as keeper of mining records of the United Kingdom, has had opportunities for such a task not enjoyed by anyone else, and has evidently made the most of them. . . . The language and style adopted are good, and the treatment of the various subjects laborious, conscientious, and scientific."—*Engineering.*

"The book is, in fact, a treasure-house of statistical information on mining subjects, and we know of no other work embodying so great a mass of matter of this kind. Were this the only merit of Mr. Hunt's volume, it would be sufficient to render it indispensable in the library of everyone interested in the development of the mining and metallurgical industries of this country." —*Athenæum.*

"A mass of information not elsewhere available, and of the greatest value to those who may be interested in our great mineral industries."—*Engineer.*

"A sound, business-like collection of interesting facts. . . . The amount of information Mr. Hunt has brought together is enormous. . . . The volume appears likely to convey more instruction upon the subject than any work hitherto published."—*Mining Journal.*

Colliery Management.

THE COLLIERY MANAGER'S HANDBOOK: A Comprehensive Treatise on the Laying-out and Working of Collieries, Designed as a Book of Reference for Colliery Managers, and for the Use of Coal-Mining Students preparing for First-class Certificates. By CALEB PAMELY, Mining Engineer and Surveyor; Member of the North of England Institute of Mining and Mechanical Engineers; and Member of the South Wales Institute of Mining Engineers. With nearly 500 Plans, Diagrams, and other Illustrations. Medium 8vo, about 600 pages. Price £1 5s. strongly bound. [*Just published.*

Coal and Iron.

THE COAL AND IRON INDUSTRIES OF THE UNITED KINGDOM. Comprising a Description of the Coal Fields, and of the Principal Seams of Coal, with Returns of their Produce and its Distribution, and Analyses of Special Varieties. Also an Account of the occurrence of Iron Ores in Veins or Seams; Analyses of each Variety; and a History of the Rise and Progress of Pig Iron Manufacture. By RICHARD MEADE, Assistant Keeper of Mining Records. With Maps. 8vo, £1 8s. cloth.

"The book is one which must find a place on the shelves of all interested in coal and iron production, and in the iron, steel, and other metallurgical industries."—*Engineer.*

"Of this book we may unreservedly say that it is the best of its class which we have ever met. . . A book of reference which no one engaged in the iron or coal trades should omit from his brary."—*Iron and Coal Trades Review.*

Prospecting for Gold and other Metals.

THE PROSPECTOR'S HANDBOOK: A Guide for the Prospector and Traveller in Search of Metal-Bearing or other Valuable Minerals. By J. W. ANDERSON, M.A. (Camb.), F.R.G.S., Author of "Fiji and New Caledonia." Fifth Edition, thoroughly Revised and Enlarged. Small crown 8vo, 3s. 6*d.* cloth.

"Will supply a much felt want, especially among Colonists, in whose way are so often thrown many mineralogical specimens the value of which it is difficult to determine."—*Engineer.*

"How to find commercial minerals, and how to identify them when they are found, are the leading points to which attention is directed. The author has managed to pack as much practical detail into his pages as would supply material for a book three times its size."—*Mining Journal.*

Mining Notes and Formulæ.

NOTES AND FORMULÆ FOR MINING STUDENTS. By JOHN HERMAN MERIVALE, M.A., Certificated Colliery Manager, Professor of Mining in the Durham College of Science, Newcastle-upon-Tyne. Third Edition, Revised and Enlarged. Small crown 8vo, 2s. 6*d.* cloth.

"Invaluable to anyone who is working up for an examination on mining subjects."—*Coal and Iron Trades Review.*

"The author has done his work in an exceedingly creditable manner, and has produced a book that will be of service to students, and those who are practically engaged in mining operations."—*Engineer.*

"A vast amount of technical matter of the utmost value to mining engineers, and of considerable interest to students."—*Schoolmaster.*

Explosives.

A HANDBOOK ON MODERN EXPLOSIVES. Being a Practical Treatise on the Manufacture and Application of Dynamite, Gun-Cotton, Nitro-Glycerine and other Explosive Compounds. Including the Manufacture of Collodion-Cotton. By M. Eissler, Mining Engineer and Metallurgical Chemist, Author of "The Metallurgy of Gold," &c. With about 100 Illustrations. Crown 8vo, 10s. 6*d.* cloth.

"Useful not only to the miner, but also to officers of both services to whom blasting and the use of explosives generally may at any time become a necessary auxiliary."—*Nature.*

"A veritable mine of information on the subject of explosives employed for military, mining and blasting purposes."—*Army and Navy Gazette.*

"The book is clearly written. Taken as a whole, we consider it an excellent little book and one that should be found of great service to miners and others who are engaged in work requiring the use of explosives."—*Athenæum.*

Gold, Metallurgy of.

THE METALLURGY OF GOLD: A Practical Treatise on the Metallurgical Treatment of Gold-bearing Ores. Including the Processes of Concentration and Chlorination, and the Assaying, Melting and Refining of Gold. By M. Eissler, Mining Engineer and Metallurgical Chemist, formerly Assistant Assayer of the U. S. Mint, San Francisco. Third Edition, Revised and greatly Enlarged. With 187 Illustrations. Crown 8vo, 12s. 6*d.* cloth.

"This book thoroughly deserves its title of a 'Practical Treatise.' The whole process of gold milling, from the breaking of the quartz to the assay of the bullion, is described in clear and orderly narrative and with much, but not too much, fulness of detail."—*Saturday Review.*

"The work is a storehouse of information and valuable data, and we strongly recommend it to all professional men engaged in the gold-mining industry."—*Mining Journal*

Silver, Metallurgy of.

THE METALLURGY OF SILVER: A Practical Treatise on the Amalgamation, Roasting and Lixiviation of Silver Ores, Including the Assaying, Melting and Refining of Silver Bullion. By M. Eissler, Author of "The Metallurgy of Gold" Second Edition, Enlarged. With 150 Illustrations. Crown 8vo, 10s. 6*d.* cloth. [*Just published.*

"A practical treatise, and a technical work which we are convinced will supply a long-felt want amongst practical men, and at the same time be of value to students and others indirectly connected with the industries."—*Mining Journal.*

"From first to last the book is thoroughly sound and reliable."—*Colliery Guardian.*

"For chemists, practical miners, assayers and investors alike, we do not know of any work on the subject so handy and yet so comprehensive."—*Glasgow Herald.*

Silver-Lead, Metallurgy of.

THE METALLURGY OF ARGENTIFEROUS LEAD: A Practical Treatise on the Smelting of Silver-Lead Ores and the Refining of Lead Bullion. Including Reports on various Smelting Establishments and Descriptions of Modern Furnaces and Plants in Europe and America. By M. Eissler, M.E., Author of "The Metallurgy of Gold," &c. Crown 8vo. 400 pp., with numerous Illustrations, 12s. 6*d.* cloth. [*Just published.*

Metalliferous Minerals and Mining.

TREATISE ON METALLIFEROUS MINERALS AND MINING. By D. C. Davies, F.G.S., Mining Engineer, &c., Author of "A Treatise on Slate and Slate Quarrying." Illustrated with numerous Wood Engravings. Fourth Edition, carefully Revised. Crown 8vo, 12s. 6*d.* cloth.

"Neither the practical miner nor the general reader interested in mines can have a better book for his companion and his guide."—*Mining Journal.* [*Mining World.*

"We are doing our readers a service in calling their attention to this valuable work."—

"As a history of the present state of mining throughout the world this book has a real value, and it supplies an actual want."—*Athenæum.*

Earthy Minerals and Mining.

A TREATISE ON EARTHY & OTHER MINERALS AND MINING. By D. C. Davies, F.G.S. Uniform with, and forming a Companion Volume to, the same Author's "Metalliferous Minerals and Mining." With 76 Wood Engravings. Second Edition. Crown 8vo, 12s. 6*d.* cloth.

"We do not remember to have met with any English work on mining matters that contains the same amount of information packed in equally convenient form."—*Academy.*

"We should be inclined to rank it as among the very best of the handy technical and trades manuals which have recently appeared."—*British Quarterly Review.*

Mineral Surveying and Valuing.

THE MINERAL SURVEYOR AND VALUER'S COMPLETE GUIDE, comprising a Treatise on Improved Mining Surveying and the Valuation of Mining Properties, with New Traverse Tables. By WM. LINTERN, Mining and Civil Engineer. Third Edition, with an Appendix on "Magnetic and Angular Surveying," with Records of the Peculiarities of Needle Disturbances. With Four Plates of Diagrams, Plans, &c. 12mo, 4*s.* cloth.

"Mr. Lintern's book forms a valuable and thoroughly trustworthy guide."—*Iron and Coal Trades Review.*

"This new edition must be of the highest value to colliery surveyors, proprietors and managers."—*Colliery Guardian.*

Asbestos and its Uses.

ASBESTOS: Its Properties, Occurrence and Uses. With some Account of the Mines of Italy and Canada. By ROBERT H. JONES. With Eight Collotype Plates and other Illustrations. Crown 8vo, 12*s.* 6*d.* cloth.

"An interesting and invaluable work."—*Colliery Guardian.*

"We counsel our readers to get this exceedingly interesting work for themselves; they will find in it much that is suggestive, and a great deal that is of immediate and practical usefulness."—*Builder.*

"A valuable addition to the architect's and engineer's library."—*Building News.*

Underground Pumping Machinery.

MINE DRAINAGE. Being a Complete and Practical Treatise on Direct-Acting Underground Steam Pumping Machinery, with a Description of a large number of the best known Engines, their General Utility and the Special Sphere of their Action, the Mode of their Application, and their merits compared with other forms of Pumping Machinery. By STEPHEN MICHELL. 8vo, 15*s.* cloth.

"Will be highly esteemed by colliery owners and lessees, mining engineers, and students generally who require to be acquainted with the best means of securing the drainage of mines. It is a most valuable work, and stands almost alone in the literature of steam pumping machinery."—*Colliery Guardian.*

"Much valuable information is given, so that the book is thoroughly worthy of an extensive circulation amongst practical men and purchasers of machinery."—*Mining Journal.*

Mining Tools.

A MANUAL OF MINING TOOLS. For the Use of Mine Managers, Agents, Students, &c. By WILLIAM MORGANS, Lecturer on Practical Mining at the Bristol School of Mines. 12mo, 2*s.* 6*d.* cloth limp.

ATLAS OF ENGRAVINGS to Illustrate the above, containing 235 Illustrations of Mining Tools, drawn to scale. 4to, 4*s.* 6*d.* cloth.

"Students in the science of mining, and overmen, captains, managers, and viewers may gain practical knowledge and useful hints by the study of Mr. Morgans' manual."—*Colliery Guardian.*

"A valuable work, which will tend materially to improve our mining literature."—*Mining Journal.*

Coal Mining.

COAL AND COAL MINING: A Rudimentary Treatise on. By the late Sir WARINGTON W. SMYTH, M.A., F.R.S., &c., Chief Inspector of the Mines of the Crown. Seventh Edition, Revised and Enlarged. With numerous Illustrations. 12mo, 4*s.* cloth boards.

"As an outline is given of every known coal-field in this and other countries, as well as of the principal methods of working, the book will doubtless interest a very large number of readers."—*Mining Journal.*

Subterraneous Surveying.

SUBTERRANEOUS SURVEYING, Elementary and Practical Treatise on, with and without the Magnetic Needle. By THOMAS FENWICK, Surveyor of Mines, and THOMAS BAKER, C.E. Illust. 12mo, 3*s.* cloth boards.

Granite Quarrying.

GRANITES AND OUR GRANITE INDUSTRIES. By GEORGE F. HARRIS, F.G.S., Membre de la Société Belge de Géologie, Lecturer on Economic Geology at the Birkbeck Institution, &c. With Illustrations. Crown 8vo, 2*s.* 6*d.* cloth.

"A clearly and well-written manual for persons engaged or interested in the granite industry."—*Scotsman.*

"An interesting work, which will be deservedly esteemed."—*Colliery Guardian.*

"An exceedingly interesting and valuable monograph on a subject which has hitherto received unaccountably little attention in the shape of systematic literary treatment."—*Scottish Leader.*

ELECTRICITY, ELECTRICAL ENGINEERING, etc.

Electrical Engineering.

THE ELECTRICAL ENGINEER'S POCKET-BOOK OF MODERN RULES, FORMULÆ, TABLES AND DATA. By H. R. KEMPE, M.Inst.E.E., A.M.Inst C.E., Technical Officer Postal Telegraphs, Author of "A Handbook of Electrical Testing," &c. With numerous Illustrations, royal 32mo, oblong, 5*s*. leather. [*Just published.*

"There is very little in the shape of formulæ or data which the electrician is likely to want in a hurry which cannot be found in its pages."—*Practical Engineer.*

"A very useful book of reference for daily use in practical electrical engineering and its various applications to the industries of the present day."—*Iron.*

"It is the best book of its kind."—*Electrical Engineer.*

"The Electrical Engineer's Pocket-Book is a good one."—*Electrician.*

"Strongly recommended to those engaged in the various electrical industries."—*Electrical Review.*

Electric Lighting.

ELECTRIC LIGHT FITTING: A Handbook for Working Electrical Engineers, embodying Practical Notes on Installation Management. By JOHN W. URQUHART, Electrician, Author of "Electric Light," &c. With numerous Illustrations, crown 8vo, 5*s*. cloth. [*Just published.*

"This volume deals with what may be termed the mechanics of electric lighting, and is addressed to men who are already engaged in the work or are training for it. The work traverses a great deal of ground, and may be read as a sequel to the same author's useful work on 'Electric Light.'"—*Electrician.*

"This is an attempt to state in the simplest language the precautions which should be adopted in installing the electric light, and to give information,for the guidance of those who have to run the plant when installed. The book is well worth the perusal of the workmen for whom it is written."—*Electrical Review.*

"Eminently practical and useful. . . . Ought to be in the hands of everyone in charge of an electric light plant."—*Electrical Engineer.*

"A really capital book, which we have no hesitation in recommending to the notice of working electricians and electrical engineers."—*Mechanical World.*

Electric Light.

ELECTRIC LIGHT: Its Production and Use. Embodying Plain Directions for the Treatment of Dynamo-Electric Machines, Batteries, Accumulators, and Electric Lamps. By J. W. URQUHART, C.E., Author of "Electric Light Fitting," &c. Fourth Edition, Revised, with Large Additions and 145 Illustrations. Crown 8vo, 7*s*. 6*d*. cloth. [*Just published.*

"The book is by far the best that we have yet met with on the subject."—*Athenæum.*

"It is the only work at present available which gives, in language intelligible for the most part to the ordinary reader, a general but concise history of the means which have been adopted up to the present time in producing the electric light."—*Metropolitan.*

"The book contains a general account of the means adopted in producing the electric light, not only as obtained from voltaic or galvanic batteries, but treats at length of the dynamo-electric machine in several of its forms."—*Colliery Guardian.*

Construction of Dynamos.

DYNAMO CONSTRUCTION: A Practical Handbook for the Use of Engineer Constructors and Electricians in Charge. With Examples of leading English, American and Continental Dynamos and Motors. By J. W. URQUHART, Author of "Electric Light," &c. Crown 8vo, 7*s*. 6*d*. cloth. [*Just published.*

"The author has produced a book for which a demand has long existed. The subject treated in a thoroughly practical manner."—*Mechanical World.*

Dynamic Electricity and Magnetism.

THE ELEMENTS OF DYNAMIC ELECTRICITY AND MAGNETISM. By PHILIP ATKINSON, A.M., Ph.D. Crown 8vo. 400 pp. With 120 Illustrations. 10*s*. 6*d*. cloth. [*Just published.*

Text Book of Electricity.

THE STUDENT'S TEXT-BOOK OF ELECTRICITY. By HENRY M. NOAD, Ph.D., F.R.S., F.C.S. New Edition, carefully Revised. With an Introduction and Additional Chapters, by W. H. PREECE, M.I.C.E., Vice-President of the Society of Telegraph Engineers, &c. With 470 Illustrations. Crown 8vo, 12*s*. 6*d*. cloth.

"We can recommend Dr. Noad's book for clear style, great range of subject, a good index, and a plethora of woodcuts. Such collections as the present are indispensable."—*Athenæum.*

"An admirable text book for every student — beginner or advanced — of electricity."—*Engineering.*

Electric Lighting.

THE ELEMENTARY PRINCIPLES OF ELECTRIC LIGHTING. By Alan A. Campbell Swinton, Associate I.E.E. Second Edition, Enlarged and Revised. With 16 Illustrations. Crown 8vo, 1*s.* 6*d.* cloth.

"Anyone who desires a short and thoroughly clear exposition of the elementary principles of electric-lighting cannot do better than read this little work."—*Bradford Observer.*

Electricity.

A MANUAL OF ELECTRICITY: Including Galvanism, Magnetism, Dia-Magnetism, Electro-Dynamics, Magno-Electricity, and the Electric Telegraph. By Henry M. Noad, Ph.D., F.R.S., F.C.S. Fourth Edition. With 500 Woodcuts. 8vo, £1 4*s.* cloth.

"It is worthy of a place in the library of every public institution."—*Mining Journal.*

Dynamo Construction.

HOW TO MAKE A DYNAMO: A Practical Treatise for Amateurs. Containing numerous Illustrations and Detailed Instructions for Constructing a Small Dynamo, to Produce the Electric Light. By Alfred Crofts. Third Edition, Revised and Enlarged. Crown 8vo, 2*s.* cloth.

"The instructions given in this unpretentious little book are sufficiently clear and explicit to enable any amateur mechanic possessed of average skill and the usual tools to be found in an amateur's workshop, to build a practical dynamo machine."—*Electrician.*

NATURAL SCIENCE, etc.

Pneumatics and Acoustics.

PNEUMATICS: including Acoustics and the Phenomena of Wind Currents, for the Use of Beginners. By Charles Tomlinson, F.R.S. F.C.S., &c. Fourth Edition, Enlarged. 12mo, 1*s.* 6*d.* cloth.

"Beginners in the study of this important application of science could not have a better manual." —*Scotsman.* "A valuable and suitable text-book for students of Acoustics and the Phenomena of Wind Currents."—*Schoolmaster.*

Conchology.

A MANUAL OF THE MOLLUSCA: Being a Treatise on Recent and Fossil Shells. By S. P. Woodward, A.L.S., F.G.S., late Assistant Palæontologist in the British Museum. With an Appendix on *Recent and Fossil Conchological Discoveries,* by Ralph Tate, A.L.S., F.G.S. Illustrated by A. N. Waterhouse and Joseph Wilson Lowry. With 23 Plates and upwards of 300 Woodcuts. Reprint of Fourth Ed., 1880. Cr. 8vo, 7*s.* 6*d.* cl.

"A most valuable storehouse of conchological and geological information."—*Science Gossip.*

Geology.

RUDIMENTARY TREATISE ON GEOLOGY, PHYSICAL AND HISTORICAL. Consisting of "Physical Geology," which sets forth the leading Principles of the Science; and "Historical Geology," which treats of the Mineral and Organic Conditions of the Earth at each successive epoch, especial reference being made to the British Series of Rocks. By Ralph Tate, A.L.S., F.G.S., &c. With 250 Illustrations. 12mo, 5*s* cloth.

"The fulness of the matter has elevated the book into a manual. Its information is exhaustive and well arranged."—*School Board Chronicle.*

Geology and Genesis.

THE TWIN RECORDS OF CREATION; or, Geology and Genesis: their Perfect Harmony and Wonderful Concord. By George W. Victor le Vaux. Numerous Illustrations. Fcap. 8vo, 5*s.* cloth.

"A valuable contribution to the evidences of Revelation, and disposes very conclusively of the arguments of those who would set God's Works against God's Word."—*The Rock.*

The Constellations.

STAR GROUPS: A Student's Guide to the Constellations. By J. Ellard Gore, F.R.A.S., M.R.I.A., &c., Author of "The Scenery of the Heavens." With 30 Maps. Small 4to, 5*s.* cloth, silvered. [*Just published.*

Astronomy.

ASTRONOMY. By the late Rev. Robert Main, M.A., F.R.S., formerly Radcliffe Observer at Oxford. Third Edition, Revised and Corrected to the present time, by W. T. Lynn, B.A., F.R.A.S. 12mo, 2*s.* cloth.

"A sound and simple treatise, very carefully edited, and a capital book for beginners."—*Knowledge.* [*tional Times.*
"Accurately brought down to the requirements of the present time by Mr. Lynn."—*Educa-*

DR. LARDNER'S COURSE OF NATURAL PHILOSOPHY.

THE HANDBOOK OF MECHANICS. Enlarged and almost re-written by BENJAMIN LOEWY, F.R.A.S. With 378 Illustrations. Post 8vo, 6*s.* cloth.

"The perspicuity of the original has been retained, and chapters which had become obsolete have been replaced by others of more modern character. The explanations throughout are studiously popular, and care has been taken to show the application of the various branches of physics to the industrial arts, and to the practical business of life."—*Mining Journal.*

"Mr. Loewy has carefully revised the book, and brought it up to modern requirements."—*Nature.*

"Natural philosophy has had few exponents more able or better skilled in the art of popularising the subject than Dr. Lardner; and Mr. Loewy is doing good service in fitting this treatise, and the others of the series, for use at the present time."—*Scotsman.*

THE HANDBOOK OF HYDROSTATICS AND PNEUMATICS. New Edition, Revised and Enlarged, by BENJAMIN LOEWY, F.R.A.S. With 236 Illustrations. Post 8vo, 5*s.* cloth.

"For those 'who desire to attain an accurate knowledge of physical science without the profound methods of mathematical investigation,' this work is not merely intended, but well adapted."—*Chemical News.*

"The volume before us has been carefully edited, augmented to nearly twice the bulk of the former edition, and all the most recent matter has been added. . . . It is a valuable text-book."—*Nature.*

"Candidates for pass examinations will find it, we think, specially suited to their requirements." *English Mechanic.*

THE HANDBOOK OF HEAT. Edited and almost entirely re-written by BENJAMIN LOEWY, F.R.A.S., &c. 117 Illustrations. Post 8vo, 6*s.* cloth.

"The style is always clear and precise, and conveys instruction without leaving any cloudiness or lurking doubts behind."—*Engineering.*

"A most exhaustive book on the subject on which it treats, and is so arranged that it can be understood by all who desire to attain an accurate knowledge of physical science. . . . . Mr. Loewy has included all the latest discoveries in the varied laws and effects of heat."—*Standard.*

"A complete and handy text-book for the use of students and general readers."—*English Mechanic.*

THE HANDBOOK OF OPTICS. By DIONYSIUS LARDNER, D.C.L., formerly Professor of Natural Philosophy and Astronomy in University College, London. New Edition. Edited by T. OLVER HARDING, B.A. Lond., of University College, London. With 298 Illustrations. Small 8vo, 448 pages, 5*s.* cloth.

"Written by one of the ablest English scientific writers, beautifully and elaborately illustrated." *Mechanic's Magazine.*

THE HANDBOOK OF ELECTRICITY, MAGNETISM, AND ACOUSTICS. By Dr. LARDNER. Ninth Thousand. Edit. by GEORGE CAREY FOSTER, B.A., F.C.S. With 400 Illustrations. Small 8vo, 5*s.* cloth.

"The book could not have been entrusted to anyone better calculated to preserve the terse and lucid style of Lardner, while correcting his errors and bringing up his work to the present state of scientific knowledge."—*Popular Science Review.*

THE HANDBOOK OF ASTRONOMY. Forming a Companion to the "Handbook of Natural Philosophy." By DIONYSIUS LARDNER, D.C.L., formerly Professor of Natural Philosophy and Astronomy in University College, London. Fourth Edition. Revised and Edited by EDWIN DUNKIN, F.R.A.S., Royal Observatory, Greenwich. With 38 Plates and upwards of 100 Woodcuts. In One Vol., small 8vo, 550 pages, 9*s.* 6*d.* cloth.

"Probably no other book contains the same amount of information in so compendious and well-arranged a form—certainly none at the price at which this is offered to the public."—*Athenæum.*

"We can do no other than pronounce this work a most valuable manual of astronomy, and we strongly recommend it to all who wish to acquire a general—but at the same time correct—acquaintance with this sublime science."—*Quarterly Journal of Science.*

"One of the most deservedly popular books on the subject . . . We would recommend not only the student of the elementary principles of the science, but he who aims at mastering the higher and mathematical branches of astronomy, not to be without this work beside him."—*Practical Magazine.*

Dr. Lardner's Electric Telegraph.

THE ELECTRIC TELEGRAPH. By Dr. LARDNER. Revised and Re-written by E. B. BRIGHT, F.R.A.S. 140 Illustrations. Small 8vo, 2*s.* 6*d.* cloth.

"One of the most readable books extant on the Electric Telegraph."—*English Mechanic.*

DR. LARDNER'S MUSEUM OF SCIENCE AND ART.

THE MUSEUM OF SCIENCE AND ART. Edited by Dionysius Lardner, D.C.L., formerly Professor of Natural Philosophy and Astronomy in University College, London. With upwards of 1,200 Engravings on Wood. In 6 Double Volumes, £1 1s., in a new and elegant cloth binding; or handsomely bound in half-morocco, 31s. 6*d.*

⁂ Opinions of the Press.

"This series, besides affording popular but sound instruction on scientific subjects, with which the humblest man in the country ought to be acquainted, also undertakes that teaching of 'Common Things' which every well-wisher of his kind is anxious to promote. Many thousand copies of this serviceable publication have been printed, in the belief and hope that the desire for instruction and improvement widely prevails; and we have no fear that such enlightened faith will meet with disappointment."—*Times.*

"A cheap and interesting publication, alike informing and attractive. The papers combine subjects of importance and great scientific knowledge, considerable inductive powers, and a popular style of treatment."—*Spectator.*

"The 'Museum of Science and Art' is the most valuable contribution that has ever been made to the Scientific Instruction of every class of society."—Sir David Brewster, in the *North British Review.*

"Whether we consider the liberality and beauty of the illustrations, the charm of the writing, or the durable interest of the matter, we must express our belief that there is hardly to be found among the new books one that would be welcomed by people of so many ages and classes as a valuable present."—*Examiner.*

⁂ *Separate books formed from the above, suitable for Workmen's Libraries, Science Classes, etc.*

Common Things Explained. Containing Air, Earth, Fire, Water, Time, Man, the Eye, Locomotion, Colour, Clocks and Watches, &c. 233 Illustrations, cloth gilt, 5s.

The Microscope. Containing Optical Images, Magnifying Glasses, Origin and Description of the Microscope, Microscopic Objects, the Solar Microscope, Microscopic Drawing and Engraving, &c. 147 Illustrations, cloth gilt, 2s.

Popular Geology. Containing Earthquakes and Volcanoes, the Crust of the Earth, &c. 201 Illustrations, cloth gilt, 2s. 6*d.*

Popular Physics. Containing Magnitude and Minuteness, the Atmosphere, Meteoric Stones, Popular Fallacies, Weather Prognostics, the Thermometer, the Barometer, Sound, &c. 85 Illustrations, cloth gilt, 2s. 6*d.*

Steam and its Uses. Including the Steam Engine, the Locomotive, and Steam Navigation. 89 Illustrations, cloth gilt, 2s.

Popular Astronomy. Containing How to observe the Heavens—The Earth, Sun, Moon, Planets, Light, Comets, Eclipses, Astronomical Influences, &c. 182 Illustrations, 4s. 6*d.*

The Bee and White Ants: Their Manners and Habits. With Illustrations of Animal Instinct and Intelligence. 135 Illustrations, cloth gilt, 2s.

The Electric Telegraph Popularized. To render intelligible to all who can Read, irrespective of any previous Scientific Acquirements, the various forms of Telegraphy in Actual Operation. 100 Illustrations, cloth gilt, 1s. 6*d.*

Dr. Lardner's School Handbooks.

NATURAL PHILOSOPHY FOR SCHOOLS. By Dr. Lardner. 328 Illustrations. Sixth Edition. One Vol., 3s. 6*d.* cloth.

"A very convenient class-book for junior students in private schools. It is intended to convey, in clear and precise terms, general notions of all the principal divisions of Physical Science."—*British Quarterly Review.*

ANIMAL PHYSIOLOGY FOR SCHOOLS. By Dr. Lardner. With 190 Illustrations. Second Edition. One Vol., 3s. 6*d.* cloth.

"Clearly written, well arranged, and excellently illustrated."—*Gardener's Chronicle.*

COUNTING-HOUSE WORK, TABLES, etc.

Introduction to Business.

LESSONS IN COMMERCE. By Professor R. GAMBARO, of the Royal High Commercial School at Genoa. Edited and Revised by JAMES GAULT, Professor of Commerce and Commercial Law in King's College, London. Crown 8vo, price about 3*s.* 6*d.* [*In the press.*

Accounts for Manufacturers.

FACTORY ACCOUNTS: Their Principles and Practice. A Handbook for Accountants and Manufacturers, with Appendices on the Nomenclature of Machine Details; the Income Tax Acts; the Rating of Factories; Fire and Boiler Insurance; the Factory and Workshop Acts, &c., including also a Glossary of Terms and a large number of Specimen Rulings. By EMILE GARCKE and J. M. FELLS. Third Edition. Demy 8vo, 250 pages, price 6*s.* strongly bound.

"A very interesting description of the requirements of Factory Accounts. . . . the principle of assimilating the Factory Accounts to the general commercial books is one which we thoroughly agree with."—*Accountants' Journal.*

"There are few owners of Factories who would not derive great benefit from the perusal of this most admirable work."—*Local Government Chronicle.*

Foreign Commercial Correspondence.

THE FOREIGN COMMERCIAL CORRESPONDENT: Being Aids to Commercial Correspondence in Five Languages—English, French, German, Italian and Spanish. By CONRAD E. BAKER. Second Edition, Revised. Crown 8vo, 3*s.* 6d. cloth.

"Whoever wishes to correspond in all the languages mentioned by Mr. Baker cannot do better than study this work, the materials of which are excellent and conveniently arranged."—*Athenæum.*

"A careful examination has convinced us that it is unusually complete, well arranged and reliable. The book is a thoroughly good one."—*Schoolmaster.*

Intuitive Calculations.

THE COMPENDIOUS CALCULATOR; or, Easy and Concise Methods of Performing the various Arithmetical Operations required in Commercial and Business Transactions, together with Useful Tables. By D. O'GORMAN. Corrected by Professor J. R. YOUNG. Twenty-seventh Ed., Revised by C. NORRIS. Fcap. 8vo, 2*s.* 6*d.* cloth; or, 3*s.* 6*d.* half-bound.

"It would be difficult to exaggerate the usefulness of a book like this to everyone engaged in commerce or manufacturing industry."—*Knowledge.*

"Supplies special and rapid methods for all kinds of calculations. Of great utility to persons engaged in any kind of commercial transactions."—*Scotsman.*

Modern Metrical Units and Systems.

MODERN METROLOGY: A Manual of the Metrical Units and Systems of the Present Century. With an Appendix containing a proposed English System. By LOWIS D'A. JACKSON, A.M.Inst.C.E., Author of "Aid to Survey Practice," &c. Large crown 8vo, 12*s.* 6*d.* cloth.

"The author has brought together much valuable and interesting information. . . . We cannot but recommend the work."—*Nature.*

"For exhaustive tables of equivalent weights and measures of all sorts, and for clear demonstrations of the effects of the various systems that have been proposed or adopted, Mr. Jackson's treatise is without a rival."—*Academy.*

The Metric System and the British Standards.

A SERIES OF METRIC TABLES, in which the British Standard Measures and Weights are compared with those of the Metric System at present in Use on the Continent. By C. H. DOWLING, C.E. 8vo, 10*s.* 6*d.* strongly bound.

"Their accuracy has been certified by Professor Airy, the Astronomer-Royal."—*Builder.*

"Mr. Dowling's Tables are well put together as a ready-reckoner for the conversion of one system into the other."—*Athenæum.*

Iron and Metal Trades' Calculator.

THE IRON AND METAL TRADES' COMPANION. For expeditiously ascertaining the Value of any Goods bought or sold by Weight, from 1*s.* per cwt. to 112*s.* per cwt., and from one farthing per pound to one shilling per pound. Each Table extends from one pound to 100 tons. To which are appended Rules on Decimals, Square and Cube Root, Mensuration of Superficies and Solids, &c.; also Tables of Weights of Materials, and other Useful Memoranda. By THOS. DOWNIE. Strongly bound in leather, 396 pp., 9*s.*

"A most useful set of tables. . . . Nothing like them before existed."—*Building News.*

"Although specially adapted to the iron and metal trades, the tables will be found useful in every other business in which merchandise is bought and sold by weight."—*Railway News.*

Calculator for Numbers and Weights Combined.

THE NUMBER, WEIGHT AND FRACTIONAL CALCULATOR. Containing upwards of 250,000 Separate Calculations, showing at a glance the value at 422 different rates, ranging from $\frac{1}{128}$th of a Penny to 20s. each, or per cwt., and £20 per ton, of any number of articles consecutively, from 1 to 470.—Any number of cwts., qrs., and lbs., from 1 cwt. to 470 cwts.—Any number of tons, cwts., qrs., and lbs., from 1 to 1,000 tons. By WILLIAM CHADWICK, Public Accountant. Third Edition, Revised and Improved. 8vo, price 18*s*., strongly bound for Office wear and tear.

⁂ *This work is specially adapted for the Apportionment of Mileage Charges for Railway Traffic.*

☞ *This comprehensive and entirely unique and original Calculator is adapted for the use of Accountants and Auditors, Railway Companies, Canal Companies, Shippers, Shipping Agents, General Carriers, etc.*

Ironfounders, Brassfounders, Metal Merchants, Iron Manufacturers, Ironmongers, Engineers, Machinists, Boiler Makers, Millwrights, Roofing, Bridge and Girder Makers, Colliery Proprietors, etc.

Timber Merchants, Builders,' Contractors, Architects, Surveyors, Auctioneers Valuers, Brokers, Mill Owners and Manufacturers, Mill Furnishers, Merchants and General Wholesale Tradesmen.

⁂ OPINIONS OF THE PRESS.

"The book contains the answers to questions, and not simply a set of ingenious puzzle methods of arriving at results. It is as easy of reference for any answer or any number of answers as a dictionary, and the references are even more quickly made. For making up accounts or estimates, the book must prove invaluable to all who have any considerable quantity of calculations involving price and measure in any combination to do."—*Engineer.*

"The most perfect work of the kind yet prepared."—*Glasgow Herald.*

Comprehensive Weight Calculator.

THE WEIGHT CALCULATOR. Being a Series of Tables upon a New and Comprehensive Plan, exhibiting at One Reference the exact Value of any Weight from 1 lb. to 15 tons, at 300 Progressive Rates, from 1*d.* to 168*s.* per cwt., and containing 186,000 Direct Answers, which, with their Combinations, consisting of a single addition (mostly to be performed at sight), will afford an aggregate of 10,266,000 Answers; the whole being calculated and designed to ensure correctness and promote despatch. By HENRY HARBEN, Accountant. Fourth Edition, carefully Corrected. Royal 8vo, strongly half-bound, £1 5*s*.

"A practical and useful work of reference for men of business generally; it is the best of the kind we have seen.' —*Ironmonger.*

"Of priceless value to business men. It is a necessary book in all mercantile offices."—*Sheffield Independent.*

Comprehensive Discount Guide.

THE DISCOUNT GUIDE. Comprising several Series of Tables for the use of Merchants, Manufacturers, Ironmongers, and others, by which may be ascertained the exact Profit arising from any mode of using Discounts, either in the Purchase or Sale of Goods, and the method of either Altering a Rate of Discount or Advancing a Price, so as to produce, by one operation, a sum that will realise any required profit after allowing one or more Discounts: to which are added Tables of Profit or Advance from 1¼ to 90 per cent., Tables of Discount from 1¼ to 98¾ per cent., and Tables of Commission, &c., from ⅛ to 10 per cent. By HENRY HARBEN, Accountant, Author of "The Weight Calculator." New Edition, carefully Revised and Corrected. Demy 8vo, 544 pp. half-bound, £1 5*s*.

"A book such as this can only be appreciated by business men, to whom the saving of time means saving of money. We have the high authority of Professor J. R. Young that the tables throughout the work are constructed upon strictly accurate principles. The work is a mode of typographical clearness, and must prove of great value to merchants, manufacturers, and general traders."—*British Trade Journal.*

Iron Shipbuilders' and Merchants' Weight Tables.

IRON-PLATE WEIGHT TABLES: For Iron Shipbuilders, Engineers and Iron Merchants. Containing the Calculated Weights of upwards of 150,000 different sizes of Iron Plates, from 1 foot by 6 in. by ¼ in. to 10 feet by 5 feet by 1 in. Worked out on the basis of 40 lbs. to the square foot of Iron of 1 inch in thickness. Carefully compiled and thoroughly Revised by H. BURLINSON and W. H. SIMPSON. Oblong 4to, 25*s*. half-bound.

"This work will be found of great utility. The authors have had much practical experience of what is wanting in making estimates; and the use of the book will save much time in making elaborate calculations."—*English Mechanic.*

INDUSTRIAL AND USEFUL ARTS.

Soap-making.

THE ART OF SOAP-MAKING: A Practical Handbook of the Manufacture of Hard and Soft Soaps, Toilet Soaps, etc. Including many New Processes, and a Chapter on the Recovery of Glycerine from Waste Leys. By ALEXANDER WATT, Author of "Electro-Metallurgy Practically Treated," &c. With numerous Illustrations. Fourth Edition, Revised and Enlarged. Crown 8vo, 7*s.* 6*d.* cloth.

"The work will prove very useful, not merely to the technological student, but to the practical soap-boiler who wishes to understand the theory of his art."—*Chemical News.*

"Mr. Watt's book is a thoroughly practical treatise on an art which has almost no literature in our language. We congratulate the author on the success of his endeavour to fill a void in English technical literature."—*Nature.*

Paper Making.

THE ART OF PAPER MAKING: A Practical Handbook of the Manufacture of Paper from Rags, Esparto, Straw and other Fibrous Materials, Including the Manufacture of Pulp from Wood Fibre, with a Description of the Machinery and Appliances used. To which are added Details of Processes for Recovering Soda from Waste Liquors. By ALEXANDER WATT. With Illustrations. Crown 8vo, 7*s.* 6*d.* cloth.

"This book is succinct, lucid, thoroughly practical, and includes everything of interest to the modern paper maker. It is the latest, most practical and most complete work on the paper-making art before the British public."—*Paper Record.*

"It may be regarded as the standard work on the subject. The book is full of valuable information. The 'Art of Paper-making,' is in every respect a model of a text-book, either for a technical class or for the private student."—*Paper and Printing Trades Journal.*

"Admirably adapted for general as well as ordinary technical reference, and as a handbook for students in technical education may be warmly commended."—*The Paper Maker's Monthly Journal.*

Leather Manufacture.

THE ART OF LEATHER MANUFACTURE. Being a Practical Handbook, in which the Operations of Tanning, Currying, and Leather Dressing are fully Described, the Principles of Tanning Explained and many Recent Processes introduced. By ALEXANDER WATT, Author of "Soap-Making," &c. With numerous Illustrations. Second Edition. Crown 8vo, 9*s.* cloth.

"A sound, comprehensive treatise on tanning and its accessories. This book is an eminently valuable production, which redounds to the credit of both author and publishers."—*Chemical Review.*

"This volume is technical without being tedious, comprehensive and complete without being prosy, and it bears on every page the impress of a master hand. We have never come across a better trade treatise, nor one that so thoroughly supplied an absolute want."—*Shoe and Leather Trades' Chronicle.*

Boot and Shoe Making.

THE ART OF BOOT AND SHOE-MAKING. A Practical Handbook, including Measurement, Last-Fitting, Cutting-Out, Closing and Making, with a Description of the most approved Machinery employed. By JOHN B. LENO, late Editor of *St. Crispin*, and *The Boot and Shoe-Maker.* With numerous Illustrations. Third Edition. 12mo, 2*s.* cloth limp.

"This excellent treatise is by far the best work ever written on the subject. A new work, embracing all modern improvements, was much wanted. This want is now satisfied. The chapter on clicking, which shows how waste may be prevented, will save fifty times the price of the book." —*Scottish Leather Trader.*

Dentistry.

MECHANICAL DENTISTRY: A Practical Treatise on the Construction of the various kinds of Artificial Dentures. Comprising also Useful Formulæ, Tables and Receipts for Gold Plate, Clasps, Solders, &c. &c. By CHARLES HUNTER. Third Edition, Revised. With upwards of 100 Wood Engravings. Crown 8vo, 3*s.* 6*d.* cloth.

"The work is very practical."—*Monthly Review of Dental Surgery.*

"We can strongly recommend Mr. Hunter's treatise to all students preparing for the profession of dentistry, as well as to every mechanical dentist."—*Dublin Journal of Medical Science.*

Wood Engraving.

WOOD ENGRAVING: A Practical and Easy Introduction to the Study of the Art. By WILLIAM NORMAN BROWN. Second Edition. With numerous Illustrations. 12mo, 1*s.* 6*d.* cloth limp.

"The book is clear and complete, and will be useful to anyone wanting to understand the first elements of the beautiful art of wood engraving."—*Graphic.*

HANDYBOOKS FOR HANDICRAFTS. By PAUL N. HASLUCK.

Metal Turning.

THE METAL TURNER'S HANDYBOOK. A Practical Manual for Workers at the Foot-Lathe: Embracing Information on the Tools, Appliances and Processes employed in Metal Turning. By PAUL N. HASLUCK, Author of "Lathe-Work." With upwards of One Hundred Illustrations. Second Edition, Revised. Crown 8vo, 2*s.* cloth.

"Clearly and concisely written, excellent in every way."—*Mechanical World.*

Wood Turning.

THE WOOD TURNER'S HANDYBOOK. A Practical Manual for Workers at the Lathe: Embracing Information on the Tools, Appliances and Processes Employed in Wood Turning. By PAUL N. HASLUCK. With upwards of One Hundred Illustrations. Crown 8vo, 2*s.* cloth.

"We recommend the book to young turners and amateurs. A multitude of workmen have hitherto sought in vain for a manual of this special industry."—*Mechanical World.*

WOOD AND METAL TURNING. By P. N. HASLUCK. (Being the Two preceding Vols. bound together.) 300 pp., with upwards of 200 Illustrations, crown 8vo, 3*s.* 6*d.* cloth.

Watch Repairing.

THE WATCH JOBBER'S HANDYBOOK. A Practical Manual on Cleaning, Repairing and Adjusting. Embracing Information on the Tools, Materials, Appliances and Processes Employed in Watchwork. By PAUL N. HASLUCK. With upwards of One Hundred Illustrations. Cr. 8vo, 2*s.* cloth.

"All young persons connected with the trade should acquire and study this excellent, and at the same time, inexpensive work."—*Clerkenwell Chronicle.*

Clock Repairing.

THE CLOCK JOBBER'S HANDYBOOK: A Practical Manual on Cleaning, Repairing and Adjusting. Embracing Information on the Tools, Materials, Appliances and Processes Employed in Clockwork. By PAUL N. HASLUCK. With upwards of 100 Illustrations. Cr. 8vo, 2*s.* cloth.

"Of inestimable service to those commencing the trade."—*Coventry Standard.*

WATCH AND CLOCK JOBBING. By P. N. HASLUCK. (Being the Two preceding Vols. bound together.) 320 pp., with upwards of 200 Illustrations, crown 8vo, 3*s.* 6*d.* cloth.

Pattern Making.

THE PATTERN MAKER'S HANDYBOOK. A Practical Manual, embracing Information on the Tools, Materials and Appliances employed in Constructing Patterns for Founders. By PAUL N. HASLUCK. With One Hundred Illustrations. Crown 8vo, 2*s.* cloth.

"This handy volume contains sound information of considerable value to students and artificers."—*Hardware Trades Journal.*

Mechanical Manipulation.

THE MECHANIC'S WORKSHOP HANDYBOOK. A Practical Manual on Mechanical Manipulation. Embracing Information on various Handicraft Processes, with Useful Notes and Miscellaneous Memoranda. By PAUL N. HASLUCK. Crown 8vo, 2*s.* cloth.

"It is a book which should be found in every workshop, as it is one which will be continually referred to for a very great amount of standard information."—*Saturday Review.*

Model Engineering.

THE MODEL ENGINEER'S HANDYBOOK: A Practical Manual on Model Steam Engines. Embracing Information on the Tools, Materials and Processes Employed in their Construction. By PAUL N. HASLUCK. With upwards of 100 Illustrations. Crown 8vo, 2*s.* cloth.

"By carefully going through the work, amateurs may pick up an excellent notion of the construction of full-sized steam engines."—*Telegraphic Journal.*

Cabinet Making.

THE CABINET WORKER'S HANDYBOOK: A Practical Manual, embracing Information on the Tools, Materials, Appliances and Processes employed in Cabinet Work. By PAUL N. HASLUCK, Author of "Lathe Work," &c. With upwards of 100 Illustrations. Crown 8vo, 2*s.* cloth.

"Thoroughly practical throughout. The amateur worker in wood will find it most useful."—[*Glasgow Herald.*

Electrolysis of Gold, Silver, Copper, etc.

ELECTRO-DEPOSITION: A Practical Treatise on the Electrolysis of Gold, Silver, Copper, Nickel, and other Metals and Alloys. With descriptions of Voltaic Batteries, Magneto and Dynamo-Electric Machines, Thermopiles, and of the Materials and Processes used in every Department of the Art, and several Chapters on Electro-Metallurgy. By ALEXANDER WATT. Third Edition, Revised and Corrected. Crown 8vo, 9s. cloth.

"Eminently a book for the practical worker in electro-deposition. It contains practical descriptions of methods, processes and materials as actually pursued and used in the workshop." —*Engineer.*

Electro-Metallurgy.

ELECTRO-METALLURGY; Practically Treated. By ALEXANDER WATT, Author of "Electro-Deposition," &c. Ninth Edition, Enlarged and Revised, with Additional Illustrations, and including the most recent Processes. 12mo, 4s. cloth boards.

"From this book both amateur and artisan may learn everything necessary for the successful prosecution of electroplating."—*Iron.*

Electroplating.

ELECTROPLATING: A Practical Handbook on the Deposition of Copper, Silver, Nickel, Gold, Aluminium, Brass, Platinum, &c. &c. With Descriptions of the Chemicals, Materials, Batteries and Dynamo Machines used in the Art. By J. W. URQUHART, C.E. Second Edition, with Additions. Numerous Illustrations. Crown 8vo, 5s. cloth.

"An excellent practical manual."—*Engineering.*

"An excellent work, giving the newest information."—*Horological Journal.*

Electrotyping.

ELECTROTYPING: The Reproduction and Multiplication of Printing Surfaces and Works of Art by the Electro-deposition of Metals. By J. W. URQUHART, C.E. Crown 8vo, 5s. cloth.

"The book is thoroughly practical. The reader is, therefore, conducted through the leading laws of electricity, then through the metals used by electrotypers, the apparatus, and the depositing processes, up to the final preparation of the work."—*Art Journal.*

Horology.

A TREATISE ON MODERN HOROLOGY, in Theory and Practice. Translated from the French of CLAUDIUS SAUNIER, by JULIEN TRIPPLIN, F.R.A.S., and EDWARD RIGG, M.A., Assayer in the Royal Mint. With 78 Woodcuts and 22 Coloured Plates. Second Edition. Royal 8vo, £2 2s. cloth; £2 10s. half-calf.

"There is no horological work in the English language at all to be compared to this production of M. Saunier's for clearness and completeness. It is alike good as a guide for the student and as a reference for the experienced horologist and skilled workman."—*Horological Journal.*

"The latest, the most complete, and the most reliable of those literary productions to which continental watchmakers are indebted for the mechanical superiority over their English brethren —in fact, the Book of Books, is M. Saunier's 'Treatise.'"—*Watchmaker, Jeweller and Silversmith.*

Watchmaking.

THE WATCHMAKER'S HANDBOOK. A Workshop Companion for those engaged in Watchmaking and the Allied Mechanical Arts. From the French of CLAUDIUS SAUNIER. Enlarged by JULIEN TRIPPLIN, F.R.A.S., and EDWARD RIGG, M.A., Assayer in the Royal Mint. Woodcuts and Copper Plates. Third Edition, Revised. Crown 8vo, 9s. cloth.

"Each part is truly a treatise in itself. The arrangement is good and the language is clear and concise. It is an admirable guide for the young watchmaker."—*Engineering.*

"It is impossible to speak too highly of its excellence. It fulfils every requirement in a handbook intended for the use of a workman."—*Watch and Clockmaker.*

"This book contains an immense number of practical details bearing on the daily occupation of a watchmaker."—*Watchmaker and Metalworker* (Chicago).

Goldsmiths' Work.

THE GOLDSMITH'S HANDBOOK. By GEORGE E. GEE, Jeweller, &c. Third Edition, considerably Enlarged. 12mo, 3s. 6*d.* cl. bds.

"A good, sound educator, and will be accepted as an authority."—*Horological Journal.*

Silversmiths' Work.

THE SILVERSMITH'S HANDBOOK. By GEORGE E. GEE, Jeweller, &c. Second Edition, Revised, with numerous Illustrations. 12mo, 3s. 6*d.* cloth boards.

"Workers in the trade will speedily discover its merits when they sit down to study it."—*English Mechanic.*

⁂ *The above two works together, strongly half-bound, price 7s.*

Bread and Biscuit Baking.

THE BREAD AND BISCUIT BAKER'S AND SUGAR-BOILER'S ASSISTANT. Including a large variety of Modern Recipes. With Remarks on the Art of Bread-making. By ROBERT WELLS, Practical Baker. Second Edition, with Additional Recipes. Crown 8vo, 2*s.* cloth.

" A large number of wrinkles for the ordinary cook, as well as the baker."—*Saturday Review*

Confectionery.

THE PASTRYCOOK AND CONFECTIONER'S GUIDE. For Hotels, Restaurants and the Trade in general, adapted also for Family Use. By ROBERT WELLS, Author of " The Bread and Biscuit Baker's and Sugar Boiler's Assistant." Crown 8vo, 2*s.* cloth.

" We cannot speak too highly of this really excellent work. In these days of keen competition our readers cannot do better than purchase this book."—*Bakers' Times.*

Ornamental Confectionery.

ORNAMENTAL CONFECTIONERY: A Guide for Bakers, Confectioners and Pastrycooks; including a variety of Modern Recipes, and Remarks on Decorative and Coloured Work. With 129 Original Designs. By ROBERT WELLS. Crown 8vo, 5*s.* cloth.

" A valuable work, and should be in the hands of every baker and confectioner. The illustrative designs are alone worth treble the amount charged for the whole work."—*Bakers' Times.*

Flour Confectionery.

THE MODERN FLOUR CONFECTIONER. Wholesale and Retail. Containing a large Collection of Recipes for Cheap Cakes, Biscuits, &c. With Remarks on the Ingredients used in their Manufacture, &c. By R. WELLS, Author of " Ornamental Confectionery," " The Bread and Biscuit Baker," " The Pastrycook's Guide," &c. Crown 8vo, 2*s.* cloth.

Laundry Work.

LAUNDRY MANAGEMENT. A Handbook for Use in Private and Public Laundries, Including Descriptive Accounts of Modern Machinery and Appliances for Laundry Work. By the EDITOR of " The Laundry Journal." With numerous Illustrations. Crown 8vo, 2*s.* 6*d.* cloth.

CHEMICAL MANUFACTURES & COMMERCE.

New Manual of Engineering Chemistry.

ENGINEERING CHEMISTRY: A Practical Treatise for the Use of Analytical Chemists, Engineers, Iron Masters, Iron Founders, Students, and others. Comprising Methods of Analysis and Valuation of the Principal Materials used in Engineering Work, with numerous Analyses, Examples, and Suggestions. By H. JOSHUA PHILLIPS, F.I.C., F.C.S., Analytical and Consulting Chemist to the Great Eastern Railway. Crown 8vo, 320 pp., with Illustrations, 10*s.* 6*d.* cloth. [*Just published.*

"In this work the author has rendered no small service to a numerous body of practical men. . . . . The analytical methods may be pronounced most satisfactory, being as accurate as the despatch required of engineering chemists permits."—*Chemical News.*

Analysis and Valuation of Fuels.

FUELS: SOLID, LIQUID AND GASEOUS, Their Analysis and Valuation. For the Use of Chemists and Engineers. By H. J. PHILLIPS, F.C.S., Analytical and Consulting Chemist to the Great Eastern Railway. Crown 8vo, 3*s.* 6*d.* cloth.

" Ought to have its place in the laboratory of every metallurgical establishment, and wherever fuel is used on a large scale."—*Chemical News.*

" Cannot fail to be of wide interest, especially at the present time."—*Railway News.*

Alkali Trade, Manufacture of Sulphuric Acid, etc.

A MANUAL OF THE ALKALI TRADE, including the Manufacture of Sulphuric Acid, Sulphate of Soda, and Bleaching Powder. By JOHN LOMAS. 390 pages. With 232 Illustrations and Working Drawings. Second Edition. Royal 8vo, £1 10*s.* cloth.

"This book is written by a manufacturer for manufacturers. The working details of the most approved forms of apparatus are given, and these are accompanied by no less than 232 wood engravings, all of which may be used for the purposes of construction."—*Athenæum.*

The Blowpipe.

THE BLOWPIPE IN CHEMISTRY, MINERALOGY, AND GEOLOGY. Containing all known Methods of Anhydrous Analysis, Working Examples, and Instructions for Making Apparatus. By Lieut.-Col. W. A. Ross, R.A. With 120 Illustrations. New Edition. Crown 8vo, 5s.

"The student who goes through the course of experimentation here laid down will gain a better insight into inorganic chemistry and mineralogy than if he had 'got up' any of the best text-books of the day, and passed any number of examinations in their contents."—*Chemical News.*

Commercial Chemical Analysis.

THE COMMERCIAL HANDBOOK OF CHEMICAL ANALYSIS; or, Practical Instructions for the determination of the Intrinsic or Commercial Value of Substances used in Manufactures, Trades, and the Arts. By A. Normandy. New Edition by H. M. Noad, F.R.S. Cr. 8vo, 12s. 6*d*. cl.

"Essential to the analysts appointed under the new Act. The most recent results are given, and the work is well edited and carefully written."—*Nature.*

Brewing.

A HANDBOOK FOR YOUNG BREWERS. By Herbert Edwards Wright, B.A. New Edition, much Enlarged. [*In the press.*

Dye-Wares and Colours.

THE MANUAL OF COLOURS AND DYE-WARES: Their Properties, Applications, Valuation, Impurities, and Sophistications. For the use of Dyers, Printers, Drysalters, Brokers, &c. By J. W. Slater. Second Edition, Revised and greatly Enlarged. Crown 8vo, 7s. 6*d*. cloth.

"A complete encyclopædia of the *materia tinctoria*. The information given respecting each article is full and precise, and the methods of determining the value of articles such as these, so liable to sophistication, are given with clearness, and are practical as well as valuable."—*Chemist and Druggist.*

"There is no other work which covers precisely the same ground. To students preparing or examinations in dyeing and printing it will prove exceedingly useful."—*Chemical News.*

Pigments.

THE ARTIST'S MANUAL OF PIGMENTS. Showing their Composition, Conditions of Permanency, Non-Permanency, and Adulterations; Effects in Combination with Each Other and with Vehicles; and the most Reliable Tests of Purity. By H. C. Standage Second Edition. Crown 8vo, 2s. 6*d*. cloth.

"This work is indeed *multum-in-parvo*, and we can, with good conscience, recommend it to all who come in contact with pigments, whether as makers, dealers or users."—*Chemical Review.*

Gauging. Tables and Rules for Revenue Officers, Brewers, etc.

A POCKET BOOK OF MENSURATION AND GAUGING: Containing Tables, Rules and Memoranda for Revenue Officers, Brewers, Spirit Merchants, &c. By J. B. Mant (Inland Revenue). Second Edition, Revised. Oblong 18mo, 4s. leather, with elastic band.

"This handy and useful book is adapted to the requirements of the Inland Revenue Department, and will be a favourite book of reference."—*Civilian.*

"Should be in the hands of every practical brewer."—*Brewers' Journal.*

AGRICULTURE, FARMING, GARDENING, etc.

Youatt and Burn's Complete Grazier.

THE COMPLETE GRAZIER, and FARMER'S and CATTLE-BREEDER'S ASSISTANT. Including the Breeding, Rearing, and Feeding of Stock; Management of the Dairy, Culture and Management of Grass Land, and of Grain and Root Crops, &c. By W. Youatt and R. Scott Burn. An entirely New Edition, partly Re-written and greatly Enlarged, by W. Fream, B.Sc.Lond., LL.D. In medium 8vo, about 1,000 pp. [*In the press.*

Agricultural Facts and Figures.

NOTE-BOOK OF AGRICULTURAL FACTS AND FIGURES FOR FARMERS AND FARM STUDENTS. By Primrose McConnell, late Professor of Agriculture, Glasgow Veterinary College. Third Edition. Royal 32mo, 4s. leather.

"The most complete and comprehensive Note-book for Farmers and Farm Students that we have seen. It literally teems with information, and we can cordially recommend it to all connected with agrcuilture."—*North British Agriculturist.*

Flour Manufacture, Milling, etc.

FLOUR MANUFACTURE: A Treatise on Milling Science and Practice. By Friedrich Kick, Imperial Regierungsrath, Professor of Mechanical Technology in the Imperial German Polytechnic Institute, Prague. Translated from the Second Enlarged and Revised Edition with Supplement. By H. H. P. Powles, A.M.I.C.E. Nearly 400 pp. Illustrated with 28 Folding Plates, and 167 Woodcuts. Royal 8vo, 25*s.* cloth.

"This valuable work is, and will remain, the standard authority on the science of milling. . . The miller who has read and digested this work will have laid the foundation, so to speak, of a successful career; he will have acquired a number of general principles which he can proceed to apply. In this handsome volume we at last have the accepted text-book of modern milling in good, sound English, which has little, if any, trace of the German idiom."—*The Miller.*

"The appearance of this celebrated work in English is very opportune, and British millers will, we are sure, not be slow in availing themselves of its pages."—*Millers' Gazette.*

Small Farming.

SYSTEMATIC SMALL FARMING; or, The Lessons of my Farm. Being an Introduction to Modern Farm Practice for Small Farmers in the Culture of Crops; The Feeding of Cattle; The Management of the Dairy, Poultry and Pigs, &c. &c. By Robert Scott Burn, Author of "Outlines of Landed Estates' Management." Numerous Illusts., cr. 8vo, 6*s.* cloth.

"This is the completest book of its class we have seen, and one which every amateur farmer will read with pleasure and accept as a guide."—*Field.*

"The volume contains a vast amount of useful information. No branch of farming is left untouched, from the labour to be done to the results achieved. It may be safely recommended to all who think they will be in paradise when they buy or rent a three-acre farm."—*Glasgow Herald.*

Modern Farming.

OUTLINES OF MODERN FARMING. By R. Scott Burn. Soils, Manures, and Crops—Farming and Farming Economy—Cattle, Sheep, and Horses — Management of Dairy, Pigs and Poultry — Utilisation of Town-Sewage, Irrigation, &c. Sixth Edition. In One Vol., 1,250 pp., half-bound, profusely Illustrated, 12*s.*

"The aim of the author has been to make his work at once comprehensive and trustworthy, and in this aim he has succeeded to a degree which entitles him to much credit."—*Morning Advertiser.* "No farmer should be without this book."—*Banbury Guardian.*

Agricultural Engineering.

FARM ENGINEERING, THE COMPLETE TEXT-BOOK OF. Comprising Draining and Embanking; Irrigation and Water Supply; Farm Roads, Fences, and Gates; Farm Buildings, their Arrangement and Construction, with Plans and Estimates; Barn Implements and Machines; Field Implements and Machines; Agricultural Surveying, Levelling, &c. By Prof. John Scott, Editor of the "Farmers' Gazette," late Professor of Agriculture and Rural Economy at the Royal Agricultural College, Cirencester, &c. &c. In One Vol., 1,150 pages, half-bound, with over 600 Illustrations, 12*s.*

"Written with great care, as well as with knowledge and ability. The author has done his work well; we have found him a very trustworthy guide wherever we have tested his statements. The volume will be of great value to agricultural students."—*Mark Lane Express.*

"For a young agriculturist we know of no handy volume likely to be more usefully studied. —*Bell's Weekly Messenger.*

English Agriculture.

THE FIELDS OF GREAT BRITAIN: A Text-Book of Agriculture, adapted to the Syllabus of the Science and Art Department. For Elementary and Advanced Students. By Hugh Clements (Board of Trade). Second Ed., Revised, with Additions. 18mo, 2*s.* 6*d.* cl.

"A most comprehensive volume, giving a mass of information."—*Agricultural Economist.*

"It is a long time since we have seen a book which has pleased us more, or which contains such a vast and useful fund of knowledge."—*Educational Times.*

Tables for Farmers, etc.

TABLES, MEMORANDA, AND CALCULATED RESULTS for Farmers, Graziers, Agricultural Students, Surveyors, Land Agents Auctioneers, etc. With a New System of Farm Book-keeping. Selected and Arranged by Sidney Francis. Second Edition, Revised. 272 pp., waistcoat-pocket size, 1*s.* 6*d.* limp leather.

"Weighing less than 1 oz., and occupying no more space than a match box, it contains a mass of facts and calculations which has never before, in such handy form, been obtainable. Every operation on the farm is dealt with. The work may be taken as thoroughly accurate, the whole of the tables having been revised by Dr. Fream. We cordially recommend it."—*Bell's Weekly Messenger.*

"A marvellous little book. . . . The agriculturist who possesses himself of it will not be disappointed with his investment."—*The Farm.*

Farm and Estate Book-keeping.

BOOK-KEEPING FOR FARMERS & ESTATE OWNERS. A Practical Treatise, presenting, in Three Plans, a System adapted for all Classes of Farms. By JOHNSON M. WOODMAN, Chartered Accountant. Second Edition, Revised. Cr. 8vo, 3*s.* 6*d.* cl. bds.; or 2*s.* 6*d.* cl. limp.

"The volume is a capital study of a most important subject."—*Agricultural Gazette.*

"Will be found of great assistance by those who intend to commence a system of book-keeping, the author's examples being clear and explicit, and his explanations, while full and accurate, being to a large extent free from technicalities."—*Live Stock Journal.*

Farm Account Book.

WOODMAN'S YEARLY FARM ACCOUNT BOOK. Giving a Weekly Labour Account and Diary, and showing the Income and Expenditure under each Department of Crops, Live Stock, Dairy, &c. &c. With Valuation, Profit and Loss Account, and Balance Sheet at the end of the Year, and an Appendix of Forms. Ruled and Headed for Entering a Complete Record of the Farming Operations. By JOHNSON M. WOODMAN, Chartered Accountant. Folio, 7*s.* 6*d.* half-bound.

"Contains every requisite form for keeping farm accounts readily and accurately."—*Agriculture.*

Early Fruits, Flowers and Vegetables.

THE FORCING GARDEN; or, How to Grow Early Fruits, Flowers, and Vegetables. With Plans and Estimates for Building Glass-houses, Pits and Frames. By SAMUEL WOOD. Crown 8vo, 3*s.* 6*d.* cloth.

"A good book, and fairly fills a place that was in some degree vacant. The book is written with great care, and contains a great deal of valuable teaching."—*Gardeners' Magazine.*

"Mr. Wood's book is an original and exhaustive answer to the question 'How to Grow Early Fruits, Flowers and Vegetables?'"—*Land and Water.*

Good Gardening.

A PLAIN GUIDE TO GOOD GARDENING; or, How to Grow Vegetables, Fruits, and Flowers. With Practical Notes on Soils, Manures, Seeds, Planting, Laying-out of Gardens and Grounds, &c. By S. WOOD. Fourth Edition, with numerous Illustrations. Crown 8vo, 3*s.* 6*d.* cloth.

"A very good book, and one to be highly recommended as a practical guide. The practical directions are excellent."—*Athenæum.*

"May be recommended to young gardeners, cottagers, and specially to amateurs, for the plain, simple, and trustworthy information it gives on common matters too often neglected."—*Gardeners' Chronicle.*

Gainful Gardening.

MULTUM-IN-PARVO GARDENING; or, How to make One Acre of Land produce £620 a-year by the Cultivation of Fruits and Vegetables; also, How to Grow Flowers in Three Glass Houses, so as to realise £176 per annum clear Profit. By S. WOOD. Fifth Edition. Crown 8vo, 1*s.* sewed.

"We are bound to recommend it as not only suited to the case of the amateur and gentleman's gardener, but to the market grower."—*Gardeners' Magazine.*

Gardening for Ladies.

THE LADIES' MULTUM-IN-PARVO FLOWER GARDEN, and Amateurs' Complete Guide. By S. WOOD. With Illusts. Cr. 8vo, 3*s.* 6*d.* cl.

"This volume contains a good deal of sound, common sense instruction."—*Florist.*

"Full of shrewd hints and useful instructions, based on a lifetime of experience."—*Scotsman.*

Receipts for Gardeners.

GARDEN RECEIPTS. By C. W. QUIN. 12mo, 1*s.* 6*d.* cloth.

"A useful and handy book, containing a good deal of valuable information."—*Athenæum.*

Market Gardening.

MARKET AND KITCHEN GARDENING. By Contributors to "The Garden." Compiled by C. W. SHAW, late Editor of "Gardening Illustrated." 12mo, 3*s.* 6*d.* cloth boards.

"The most valuable compendium of kitchen and market-garden work published."—*Farmer.*

Cottage Gardening.

COTTAGE GARDENING; or, Flowers, Fruits, and Vegetables for Small Gardens. By E. HOBDAY. 12mo, 1*s.* 6*d.* cloth limp.

Potato Culture.

POTATOES: How to Grow and Show Them. A Practical Guide to the Cultivation and General Treatment of the Potato. By JAMES PINK. Second Edition. Crown 8vo, 2*s.* cloth.

LAND AND ESTATE MANAGEMENT, LAW, etc.

Hudson's Land Valuer's Pocket-Book.

THE LAND VALUER'S BEST ASSISTANT: Being Tables on a very much Improved Plan, for Calculating the Value of Estates. With Tables for reducing Scotch, Irish, and Provincial Customary Acres to Statute Measure, &c. By R. HUDSON, C.E. New Edition. Royal 32mo, leather, elastic band, 4*s*.

"This new edition includes tables for ascertaining the value of leases for any term of years; and for showing how to lay out plots of ground of certain acres in forms, square, round, &c., with valuable rules for ascertaining the probable worth of standing timber to any amount; and is of incalculable value to the country gentleman and professional man."—*Farmers' Journal.*

Ewart's Land Improver's Pocket-Book.

THE LAND IMPROVER'S POCKET-BOOK OF FORMULÆ, TABLES and MEMORANDA required in any Computation relating to the Permanent Improvement of Landed Property. By JOHN EWART, Land Surveyor and Agricultural Engineer. Second Edition, Revised. Royal 32mo, oblong, leather, gilt edges, with elastic band, 4*s*.

"A compendious and handy little volume."—*Spectator.*

Complete Agricultural Surveyor's Pocket-Book.

THE LAND VALUER'S AND LAND IMPROVER'S COMPLETE POCKET-BOOK. Consisting of the above Two Works bound together. Leather, gilt edges, with strap, 7*s*. 6*d*.

"Hudson's book is the best ready-reckoner on matters relating to the valuation of land and crops, and its combination with Mr. Ewart's work greatly enhances the value and usefulness of the latter-mentioned. . . . It is most useful as a manual for reference."—*North of England Farmer.*

Auctioneer's Assistant.

THE APPRAISER, AUCTIONEER, BROKER, HOUSE AND ESTATE AGENT AND VALUER'S POCKET ASSISTANT, for the Valuation for Purchase, Sale, or Renewal of Leases, Annuities and Reversions, and of property generally; with Prices for Inventories, &c. By JOHN WHEELER, Valuer, &c. Fifth Edition, re-written and greatly extended by C. NORRIS, Surveyor, Valuer, &c. Royal 32mo, 5*s*. cloth.

"A neat and concise book of reference, containing an admirable and clearly-arranged list of prices for inventories, and a very practical guide to determine the value of furniture, &c."—*Standard.*

"Contains a large quantity of varied and useful information as to the valuation for purchase, sale, or renewal of leases, annuities and reversions, and of property generally, with prices for inventories, and a guide to determine the value of interior fittings and other effects."—*Builder.*

Auctioneering.

AUCTIONEERS: THEIR DUTIES AND LIABILITIES. A Manual of Instruction and Counsel for the Young Auctioneer. By ROBERT SQUIBBS, Auctioneer. Second Edition, Revised and partly Re-written. Demy 8vo, 12*s*. 6*d*. cloth.

"The position and duties of auctioneers treated compendiously and clearly."—*Builder.*

"Every auctioneer ought to possess a copy of this excellent work."—*Ironmonger.*

"Of great value to the profession. . . . We readily welcome this book from the fact that it treats the subject in a manner somewhat new to the profession."—*Estates Gazette.*

Legal Guide for Pawnbrokers.

THE PAWNBROKERS', FACTORS' AND MERCHANTS' GUIDE TO THE LAW OF LOANS AND PLEDGES. With the Statutes and a Digest of Cases on Rights and Liabilities, Civil and Criminal, as to Loans and Pledges of Goods, Debentures, Mercantile and other Securities. By H. C. FOLKARD, Esq., Barrister-at-Law, Author of "The Law of Slander and Libel," &c. With Additions and Corrections. Fcap. 8vo, 3*s*. 6*d*. cloth.

"This work contains simply everything that requires to be known concerning the department of the law of which it treats. We can safely commend the book as unique and very nearly perfect." —*Iron.*

"The task undertaken by Mr. Folkard has been very satisfactorily performed. . . . Such explanations as are needful have been supplied with great clearness and with due regard to brevity." *City Press.*

Law of Patents.

PATENTS FOR INVENTIONS, AND HOW TO PROCURE THEM. Compiled for the Use of Inventors, Patentees and others. By G. G. M. Hardingham, Assoc.Mem.Inst.C.E., &c. Demy 8vo, cloth, price 2s. 6*d*.

Metropolitan Rating Appeals.

REPORTS OF APPEALS HEARD BEFORE THE COURT OF GENERAL ASSESSMENT SESSIONS, from the Year 1871 to 1885. By Edward Ryde and Arthur Lyon Ryde. Fourth Edition, brought down to the Present Date, with an Introduction to the Valuation (Metropolis) Act, 1869, and an Appendix by Walter C. Ryde, of the Inner Temple, Barrister-at-Law. 8vo, 16s. cloth.

" A useful work, occupying a place mid-way between a handbook for a lawyer and a guide to the surveyor. It is compiled by a gentleman eminent in his profession as a land agent, whose specialty, it is acknowledged, lies in the direction of assessing property for rating purposes."—*Land Agents' Record.*

" It is an indispensable work of reference for all engaged in assessment business."—*Journal of Gas Lighting.*

House Property.

HANDBOOK OF HOUSE PROPERTY. A Popular and Practical Guide to the Purchase, Mortgage, Tenancy, and Compulsory Sale of Houses and Land, including the Law of Dilapidations and Fixtures; with Examples of all kinds of Valuations, Useful Information on Building, and Suggestive Elucidations of Fine Art. By E. L. Tarbuck, Architect and Surveyor. Fourth Edition, Enlarged. 12mo, 5s. cloth.

"The advice is thoroughly practical."—*Law Journal.*

'For all who have dealings with house property, this is an indispensable guide."—*Decoration.*

"Carefully brought up to date, and much improved by the addition of a division on fine art.

" A well-written and thoughtful work."—*Land Agent's Record.*

Inwood's Estate Tables.

TABLES FOR THE PURCHASING OF ESTATES, Freehold, Copyhold, or Leasehold; Annuities, Advowsons, etc., and for the Renewing of Leases held under Cathedral Churches, Colleges, or other Corporate bodies, for Terms of Years certain, and for Lives; also for Valuing Reversionary Estates, Deferred Annuities, Next Presentations, &c.; together with Smart's Five Tables of Compound Interest, and an Extension of the same to Lower and Intermediate Rates. By W. Inwood. 23rd Edition, with considerable Additions, and new and valuable Tables of Logarithms for the more Difficult Computations of the Interest of Money, Discount, Annuities, &c., by M. Fedor Thoman, of the Société Crédit Mobilier of Paris. Crown 8vo, 8s. cloth.

"Those interested in the purchase and sale of estates, and in the adjustment of compensation cases, as well as in transactions in annuities, life insurances, &c., will find the present edition of eminent service."—*Engineering.*

" 'Inwood's Tables' still maintain a most enviable reputation. The new issue has been enriched by large additional contributions by M. Fedor Thoman, whose carefully arranged Tables cannot fail to be of the utmost utility."—*Mining Journal.*

Agricultural and Tenant-Right Valuation.

THE AGRICULTURAL AND TENANT-RIGHT-VALUER'S ASSISTANT. A Practical Handbook on Measuring and Estimating the Contents, Weights and Values of Agricultural Produce and Timber, the Values of Estates and Agricultural Labour, Forms of Tenant-Right-Valuations, Scales of Compensation under the Agricultural Holdings Act, 1883, &c. &c. By Tom Bright, Agricultural Surveyor. Crown 8vo, 3s. 6*d*. cloth.

"Full of tables and examples in connection with the valuation of tenant-right, estates, labour, contents, and weights of timber, and farm produce of all kinds."—*Agricultural Gazette.*

" An eminently practical handbook, full of practical tables and data of undoubted interest and value to surveyors and auctioneers in preparing valuations of all kinds."—*Farmer.*

Plantations and Underwoods.

POLE PLANTATIONS AND UNDERWOODS: A Practical Handbook on Estimating the Cost of Forming, Renovating, Improving and Grubbing Plantations and Underwoods, their Valuation for Purposes of Transfer, Rental, Sale or Assessment. By Tom Bright, F.S.Sc., Author of "The Agricultural and Tenant-Right-Valuer's Assistant," &c. Crown 8vo, 3s. 6*d*. cloth. [*Just published.*

" Will be found very useful to those who are actually engaged in managing wood."—*Bell's Weekly Messenger.*

" To valuers, foresters and agents it will be a welcome aid."—*North British Agriculturist.*

"Well calculated to assist the valuer in the discharge of his duties, and of undoubted interest and use both to surveyors and auctioneers in preparing valuations of all kinds."—*Kent Herald.*

A Complete Epitome of the Laws of this Country.

EVERY MAN'S OWN LAWYER: A Handy-Book of the Principles of Law and Equity. By A BARRISTER. Twenty-eighth Edition. Revised and Enlarged. Including the Legislation of 1890, and including careful digests of *The Bankruptcy Act*, 1890; the *Directors' Liability Act*, 1890; the *Partnership Act*, 1890; the *Intestates' Estates Act*, 1890; the *Settled Land Act*, 1890; the *Housing of the Working Classes Act*, 1890; the *Infectious Disease (Prevention) Act*, 1890; the *Allotments Act*, 1890; the *Tenants' Compensation Act*, 1890; and the *Trustees' Appointment Act*, 1890; while other new Acts have been duly noted. Crown 8vo, 688 pp., price 6*s*. 8*d*. (saved at every consultation!), strongly bound in cloth. [*Just published.*

⁂ THE BOOK WILL BE FOUND TO COMPRISE (AMONGST OTHER MATTER)—

THE RIGHTS AND WRONGS OF INDIVIDUALS—LANDLORD AND TENANT—VENDORS AND PURCHASERS—PARTNERS AND AGENTS—COMPANIES AND ASSOCIATIONS—MASTERS, SERVANTS AND WORKMEN—LEASES AND MORTGAGES—CHURCH AND CLERGY, RITUAL—LIBEL AND SLANDER—CONTRACTS AND AGREEMENTS—BONDS AND BILLS OF SALE—CHEQUES, BILLS AND NOTES—RAILWAY AND SHIPPING LAW—BANKRUPTCY AND INSURANCE—BORROWERS, LENDERS AND SURETIES—CRIMINAL LAW—PARLIAMENTARY ELECTIONS—COUNTY COUNCILS—MUNICIPAL CORPORATIONS—PARISH LAW, CHURCHWARDENS, ETC.—INSANITARY DWELLINGS AND AREAS—PUBLIC HEALTH AND NUISANCES—FRIENDLY AND BUILDING SOCIETIES—COPYRIGHT AND PATENTS—TRADE MARKS AND DESIGNS—HUSBAND AND WIFE, DIVORCE, ETC.—TRUSTEES AND EXECUTORS—GUARDIAN AND WARD, INFANTS, ETC.—GAME LAWS AND SPORTING—HORSES, HORSE-DEALING AND DOGS—INNKEEPERS, LICENSING, ETC.—FORMS OF WILLS, AGREEMENTS, ETC. ETC.

NOTE.—*The object of this work is to enable those who consult it to help themselves to the law; and thereby to dispense, as far as possible, with professional assistance and advice. There are many wrongs and grievances which persons submit to from time to time through not knowing how or where to apply for redress; and many persons have as great a dread of a lawyer's office as of a lion's den. With this book at hand it is believed that many a* SIX-AND-EIGHTPENCE *may be saved; many a wrong redressed; many a right reclaimed; many a law suit avoided; and many an evil abated. The work has established itself as the standard legal adviser of all classes, and also made a reputation for itself as a useful book of reference for lawyers residing at a distance from law libraries, who are glad to have at hand a work embodying recent decisions and enactments.*

⁂ OPINIONS OF THE PRESS.

"It is a complete code of English Law, written in plain language, which all can understand. . . . Should be in the hands of every business man, and all who wish to abolish lawyers' bills."—*Weekly Times.*

"A useful and concise epitome of the law, compiled with considerable care."—*Law Magazine.*

"A complete digest of the most useful facts which constitute English law."—*Globe.*

"This excellent handbook. . . . Admirably done, admirably arranged, and admirably cheap."—*Leeds Mercury.*

'A concise, cheap and complete epitome of the English law. So plainly written that he who runs may read, and he who reads may understand."—*Figaro.*

"A dictionary of legal facts well put together. The book is a very useful one."—*Spectator.*

"A work which has long been wanted, which is thoroughly well done, and which we most cordially recommend."—*Sunday Times.*

"The latest edition of this popular book ought to be in every business establishment, and on every library table."—*Sheffield Post.*

Private Bill Legislation and Provisional Orders.

HANDBOOK FOR THE USE OF SOLICITORS AND ENGINEERS Engaged in Promoting Private Acts of Parliament and Provisional Orders, for the Authorization of Railways, Tramways, Works for the Supply of Gas and Water, and other undertakings of a like character. By L. LIVINGSTON MACASSEY, of the Middle Temple, Barrister-at-Law, and Member of the Institution of Civil Engineers; Author of "Hints on Water Supply." Demy 8vo, 950 pp., price 25*s*. cloth.

"The volume is a desideratum on a subject which can be only acquired by practical experience, and the order of procedure in Private Bill Legislation and Provisional Orders is followed. The author's suggestions and notes will be found of great value to engineers and others professionally engaged in this class of practice."—*Building News.*

"The author's double experience as an engineer and barrister has eminently qualified him for the task, and enabled him to approach the subject alike from an engineering and legal point of view. The volume will be found a great help both to engineers and lawyers engaged in promoting Private Acts of Parliament and Provisional Orders."—*Local Government Chronicle.*

OGDEN, SMALE AND CO. LIMITED, PRINTERS, GREAT SAFFRON HILL, E.C.

Weale's Rudimentary Series.

LONDON, 1862.

THE PRIZE MEDAL

Was awarded to the Publishers of

"WEALE'S SERIES."

A NEW LIST OF

WEALE'S SERIES

RUDIMENTARY SCIENTIFIC, EDUCATIONAL, AND CLASSICAL.

Comprising nearly Three Hundred and Fifty distinct works in almost every department of Science, Art, and Education, recommended to the notice of Engineers, Architects, Builders, Artisans, and Students generally, as well as to those interested in Workmen's Libraries, Literary and Scientific Institutions, Colleges, Schools, Science Classes, &c., &c.

☞ "WEALE'S SERIES includes Text-Books on almost every branch of Science and Industry, comprising such subjects as Agriculture, Architecture and Building, Civil Engineering, Fine Arts, Mechanics and Mechanical Engineering, Physical and Chemical Science, and many miscellaneous Treatises. The whole are constantly undergoing revision, and new editions, brought up to the latest discoveries in scientific research, are constantly issued. The prices at which they are sold are as low as their excellence is assured."—*American Literary Gazette.*

"Amongst the literature of technical education, WEALE'S SERIES has ever enjoyed a high reputation, and the additions being made by Messrs. CROSBY LOCKWOOD & SON render the series more complete, and bring the information upon the several subjects down to the present time."—*Mining Journal.*

"It is not too much to say that no books have ever proved more popular with, or more useful to, young engineers and others than the excellent treatises comprised in WEALE'S SERIES."—*Engineer.*

"The excellence of WEALE'S SERIES is now so well appreciated, that it would be wasting our space to enlarge upon their general usefulness and value."—*Builder.*

"The volumes of WEALE'S SERIES form one of the best collections of elementary technical books in any language."—*Architect.*

"WEALE'S SERIES has become a standard as well as an unrivalled collection of treatises in all branches of art and science."—*Public Opinion.*

PHILADELPHIA, 1876.

THE PRIZE MEDAL

Was awarded to the Publishers for

Books: Rudimentary, Scientific,

"WEALE'S SERIES," ETC.

CROSBY LOCKWOOD & SON,

7, STATIONERS' HALL COURT, LUDGATE HILL, LONDON, E.C.

WEALE'S RUDIMENTARY SCIENTIFIC SERIES.

*** The volumes of this Series are freely Illustrated with Woodcuts, or otherwise, where requisite. Throughout the following List it must be understood that the books are bound in limp cloth, unless otherwise stated; *but the volumes marked with a ‡ may also be had strongly bound in cloth boards for 6d. extra.*

N.B.—In ordering from this List it is recommended, as a means of facilitating business and obviating error, to quote the numbers affixed to the volumes, as well as the titles and prices.

CIVIL ENGINEERING, SURVEYING, ETC.

No.

31. *WELLS AND WELL-SINKING.* By JOHN GEO. SWINDELL, A.R.I.B.A., and G. R. BURNELL, C.E. Revised Edition. With a New Appendix on the Qualities of Water. Illustrated. 2s.

35. *THE BLASTING AND QUARRYING OF STONE*, for Building and other Purposes. By Gen. Sir J. BURGOYNE, Bart. 1s. 6d.

43. *TUBULAR, AND OTHER IRON GIRDER BRIDGES*, particularly describing the Britannia and Conway Tubular Bridges. By G. DRYSDALE DEMPSEY, C.E. Fourth Edition. 2s.

44. *FOUNDATIONS AND CONCRETE WORKS*, with Practical Remarks on Footings, Sand, Concrete, Béton, Pile-driving, Caissons, and Cofferdams, &c. By E. DOBSON. Fifth Edition. 1s. 6d.

60. *LAND AND ENGINEERING SURVEYING.* By T. BAKER, C.E. Fourteenth Edition, revised by Professor J. R. YOUNG. 2s.‡

80*. *EMBANKING LANDS FROM THE SEA.* With examples and Particulars of actual Embankments, &c. By J. WIGGINS, F.G.S. 2s.

81. *WATER WORKS*, for the Supply of Cities and Towns. With a Description of the Principal Geological Formations of England as influencing Supplies of Water, &c. By S. HUGHES, C.E. New Edition. 4s.‡

118. *CIVIL ENGINEERING IN NORTH AMERICA*, a Sketch of. By DAVID STEVENSON, F.R.S.E., &c. Plates and Diagrams. 3s.

167. *IRON BRIDGES, GIRDERS, ROOFS, AND OTHER* WORKS. By FRANCIS CAMPIN, C.E. 2s. 6d.‡

197. *ROADS AND STREETS.* By H. LAW, C.E., revised and enlarged by D. K. CLARK, C.E., including pavements of Stone, Wood, Asphalte, &c. 4s. 6d.‡

203. *SANITARY WORK IN THE SMALLER TOWNS AND IN* VILLAGES. By C. SLAGG, A.M.I.C.E. Revised Edition. 3s.‡

212. *GAS-WORKS, THEIR CONSTRUCTION AND ARRANGEMENT*; and the Manufacture and Distribution of Coal Gas. Originally written by SAMUEL HUGHES, C.E. Re-written and enlarged by WILLIAM RICHARDS, C.E. Seventh Edition, with important additions. 5s. 6d.‡

213. *PIONEER ENGINEERING.* A Treatise on the Engineering Operations connected with the Settlement of Waste Lands in New Countries. By EDWARD DOBSON, Assoc. Inst. C.E. 4s. 6d.‡

216. *MATERIALS AND CONSTRUCTION;* A Theoretical and Practical Treatise on the Strains, Designing, and Erection of Works of Construction. By FRANCIS CAMPIN, C.E. Second Edition, revised. 3s.‡

219. *CIVIL ENGINEERING.* By HENRY LAW, M.Inst. C.E. Including HYDRAULIC ENGINEERING by GEO. R. BURNELL, M.Inst. C.E. Seventh Edition, revised, with large additions by D. KINNEAR CLARK, M.Inst. C.E. 6s. 6d., Cloth boards, 7s. 6d.

268. *THE DRAINAGE OF LANDS, TOWNS, & BUILDINGS.* By G. D. DEMPSEY, C.E. Revised, with large Additions on Recent Practice in Drainage Engineering, by D. KINNEAR CLARK, M.I.C.E. Second Edition, Corrected. 4s. 6d.‡ [*Just published.*

☞ *The ‡ indicates that these vols. may be had strongly bound at 6d. extra.*

MECHANICAL ENGINEERING, ETC.

33. *CRANES,* the Construction of, and other Machinery for Raising Heavy Bodies. By Joseph Glynn, F.R.S. Illustrated. 1s. 6d.
34. *THE STEAM ENGINE.* By Dr. Lardner. Illustrated. 1s. 6d.
59. *STEAM BOILERS:* their Construction and Management. By R. Armstrong, C.E. Illustrated. 1s. 6d.
82. *THE POWER OF WATER,* as applied to drive Flour Mills, and to give motion to Turbines, &c. By Joseph Glynn, F.R.S. 2s.‡
98. *PRACTICAL MECHANISM,* the Elements of; and Machine Tools. By T. Baker, C.E. With Additions by J. Nasmyth, C.E. 2s. 6d.‡
139. *THE STEAM ENGINE,* a Treatise on the Mathematical Theory of, with Rules and Examples for Practical Men. By T. Baker, C.E. 1s. 6d.
164. *MODERN WORKSHOP PRACTICE,* as applied to Steam Engines, Bridges, Ship-building, Cranes, &c. By J. G. Winton. Fourth Edition, much enlarged and carefully revised. 3s. 6d.‡ [*Just published.*
165. *IRON AND HEAT,* exhibiting the Principles concerned in the Construction of Iron Beams, Pillars, and Girders. By J. Armour. 2s. 6d.‡
166. *POWER IN MOTION:* Horse-Power, Toothed-Wheel Gearing, Long and Short Driving Bands, and Angular Forces. By J. Armour, 2s.‡
171. *THE WORKMAN'S MANUAL OF ENGINEERING* DRAWING. By J. Maxton. 6th Edn. With 7 Plates and 350 Cuts. 3s. 6d.‡
190. *STEAM AND THE STEAM ENGINE,* Stationary and Portable. Being an Extension of the Elementary Treatise on the Steam Engine of Mr. John Sewell. By D. K. Clark, M.I.C.E. 3s. 6d.‡
200. *FUEL,* its Combustion and Economy. By C. W. Williams. With Recent Practice in the Combustion and Economy of Fuel—Coal, Coke Wood, Peat, Petroleum, &c.—by D. K. Clark, M.I.C.E. 3s. 6d.‡
202. *LOCOMOTIVE ENGINES.* By G. D. Dempsey, C.E.; with large additions by D. Kinnear Clark, M.I.C.E. 3s.‡
211. *THE BOILERMAKER'S ASSISTANT* in Drawing, Templating, and Calculating Boiler and Tank Work. By John Courtney. Practical Boiler Maker. Edited by D. K. Clark, C.E. 100 Illustrations. 2s,
217. *SEWING MACHINERY:* Its Construction, History, &c., with full Technical Directions for Adjusting, &c. By J. W. Urquhart, C.E. 2s.‡
223. *MECHANICAL ENGINEERING.* Comprising Metallurgy, Moulding, Casting, Forging, Tools, Workshop Machinery, Manufacture of the Steam Engine, &c. By Francis Campin, C.E. Second Edition. 2s. 6d.‡
236. *DETAILS OF MACHINERY.* Comprising Instructions for the Execution of various Works in Iron. By Francis Campin,'C.E. 3s.‡
237. *THE SMITHY AND FORGE;* including the Farrier's Art and Coach Smithing. By W. J. E. Crane. Illustrated. 2s. 6d.‡
238. *THE SHEET-METAL WORKER'S GUIDE;* a Practical Handbook for Tinsmiths, Coppersmiths, Zincworkers, &c. With 94 Diagrams and Working Patterns. By W. J. E. Crane. Second Edition, revised. 1s. 6d.
251. *STEAM AND MACHINERY MANAGEMENT:* with Hints on Construction and Selection. By M. Powis Bale, M.I.M.E. 2s. 6d.‡
254. *THE BOILERMAKER'S READY-RECKONER.* By J. Courtney. Edited by D. K. Clark, C.E. 4s., limp; 5s., half-bound.
255. *LOCOMOTIVE ENGINE-DRIVING.* A Practical Manual for Engineers in charge of Locomotive Engines. By Michael Reynolds, M.S.E Eighth Edition. 3s. 6d., limp; 4s. 6d. cloth boards.
256. *STATIONARY ENGINE-DRIVING.* A Practical Manual Engineers in charge of Stationary Engines. By Michael Reynolds, M.S.E. Third Edition. 3s. 6d. limp; 4s. 6d. cloth boards.
260. *IRON BRIDGES OF MODERATE SPAN:* their Construction and Erection. By Hamilton W. Pendred, C.E. 2s.

☞ *The ‡ indicates that these vols. may be had strongly bound at 6d. extra.*

MINING, METALLURGY, ETC.

4. *MINERALOGY*, Rudiments of; a concise View of the General Properties of Minerals. By A. Ramsay, F.G.S., F.R.G.S., &c. Third Edition, revised and enlarged. Illustrated. 3s. 6d.‡

117. *SUBTERRANEOUS SURVEYING*, with and without the Magnetic Needle. By T. Fenwick and T. Baker, C.E. Illustrated. 2s. 6d. ‡

135. *ELECTRO-METALLURGY;* Practically Treated. By Alexander Watt. Ninth Edition, enlarged and revised, with additional Illustrations, and including the most recent Processes. 3s. 6d.‡

172. *MINING TOOLS*, Manual of. For the Use of Mine Managers, Agents, Students, &c. By William Morgans. 2s. 6d.

172*. *MINING TOOLS, ATLAS* of Engravings to Illustrate the above, containing 235 Illustrations, drawn to Scale. 4to. 4s. 6d.

176. *METALLURGY OF IRON.* Containing History of Iron Manufacture, Methods of Assay, and Analyses of Iron Ores, Processes of Manufacture of Iron and Steel, &c. By H. Bauerman, F.G.S. Sixth Edition, revised and enlarged. 5s.‡ [*Just published.*

180. *COAL AND COAL MINING.* By the late Sir Warington W. Smyth, M.A., F.R.S. Seventh Edition, revised. 3s. 6d.‡ [*Just published.*

195. *THE MINERAL SURVEYOR AND VALUER'S COMPLETE GUIDE.* By W. Lintern, M.E. Third Edition, including Magnetic and Angular Surveying. With Four Plates. 3s. 6d.‡

214. *SLATE AND SLATE QUARRYING*, Scientific, Practical, and Commercial. By D. C. Davies, F.G.S., Mining Engineer, &c. 3s.‡

264. *A FIRST BOOK OF MINING AND QUARRYING*, with the Sciences connected therewith, for Primary Schools and Self-Instruction. By J. H. Collins, F.G.S. Second Edition, with additions. 1s. 6d.

ARCHITECTURE, BUILDING, ETC.

16. *ARCHITECTURE—ORDERS*—The Orders and their Æsthetic Principles. By W. H. Leeds. Illustrated. 1s. 6d.

17. *ARCHITECTURE—STYLES*—The History and Description of the Styles of Architecture of Various Countries, from the Earliest to the Present Period. By T. Talbot Bury, F.R.I.B.A., &c. Illustrated. 2s.
⁂ Orders and Styles of Architecture, *in One Vol.*, 3*s.* 6*d.*

18. *ARCHITECTURE—DESIGN*—The Principles of Design in Architecture, as deducible from Nature and exemplified in the Works of the Greek and Gothic Architects. By E. L. Garbett, Architect. Illustrated. 2s.6d.

⁂ *The three preceding Works, in One handsome Vol., half bound, entitled* "Modern Architecture," *price* 6*s.*

22. *THE ART OF BUILDING*, Rudiments of. General Principles of Construction, Materials used in Building, Strength and Use of Materials, Working Drawings, Specifications, and Estimates. By E. Dobson, 2s.‡

25. *MASONRY AND STONECUTTING:* Rudimentary Treatise on the Principles of Masonic Projection and their application to Construction. By Edward Dobson, M.R.I.B.A., &c. 2s. 6d.‡

42. *COTTAGE BUILDING.* By C. Bruce Allen, Architect. Tenth Edition, revised and enlarged. With a Chapter on Economic Cottages for Allotments, by Edward E. Allen, C.E. 2s.

45. *LIMES, CEMENTS, MORTARS, CONCRETES, MASTICS*, PLASTERING, &c. By G. R. Burnell, C.E. Thirteenth Edition. 1s. 6d.

57. *WARMING AND VENTILATION.* An Exposition of the General Principles as applied to Domestic and Public Buildings, Mines, Lighthouses, Ships, &c. By C. Tomlinson, F.R.S., &c. Illustrated. 3s.

111. *ARCHES, PIERS, BUTTRESSES, &c.:* Experimental Essays on the Principles of Construction. By W. Bland. Illustrated. 1s. 6d.

☞ *The ‡ indicates that these vols. may be had strongly bound at* 6*d. extra.*

Architecture, Building, etc., *continued.*

116. *THE ACOUSTICS OF PUBLIC BUILDINGS;* or, The Principles of the Science of Sound applied to the purposes of the Architect and Builder. By T. Roger Smith, M.R.I.B.A., Architect. Illustrated. 1s. 6d.

127. *ARCHITECTURAL MODELLING IN PAPER*, the Art of. By T. A. Richardson, Architect. Illustrated. 1s. 6d.

128. *VITRUVIUS—THE ARCHITECTURE OF MARCUS VITRUVIUS POLLO.* In Ten Books. Translated from the Latin by Joseph Gwilt, F.S.A., F.R.A.S. With 23 Plates. 5s.

130. *GRECIAN ARCHITECTURE*, An Inquiry into the Principles of Beauty in; with an Historical View of the Rise and Progress of the Art in Greece. By the Earl of Aberdeen. 1s.

⁂ *The two preceding Works in One handsome Vol., half bound, entitled* "Ancient Architecture," *price* 6*s.*

132. *THE ERECTION OF DWELLING-HOUSES.* Illustrated by a Perspective View, Plans, Elevations, and Sections of a pair of Semi-detached Villas, with the Specification, Quantities, and Estimates, &c. By S. H. Brooks. New Edition, with Plates. 2s. 6d.‡

156. *QUANTITIES & MEASUREMENTS* in Bricklayers', Masons', Plasterers', Plumbers', Painters', Paperhangers', Gilders', Smiths', Carpenters' and Joiners' Work. By A. C. Beaton, Surveyor. New Edition. 1s. 6d.

175. *LOCKWOOD'S BUILDER'S PRICE BOOK FOR* 1891. A Comprehensive Handbook of the Latest Prices and Data for Builders, Architects, Engineers, and Contractors. Re-constructed, Re-written, and greatly Enlarged. By Francis T. W. Miller, A.R.I.B.A. 650 pages. 3s. 6d.; cloth boards, 4s. [*Just Published.*

182. *CARPENTRY AND JOINERY*—The Elementary Principles of Carpentry. Chiefly composed from the Standard Work of Thomas Tredgold, C.E. With a TREATISE ON JOINERY by E. Wyndham Tarn, M.A. Fifth Edition, Revised. 3s. 6d.‡

182*. *CARPENTRY AND JOINERY. ATLAS* of 35 Plates to accompany the above. With Descriptive Letterpress. 4to. 6s.

185. *THE COMPLETE MEASURER;* the Measurement of Boards, Glass, &c.; Unequal-sided, Square-sided, Octagonal-sided, Round Timber and Stone, and Standing Timber, &c. By Richard Horton. Fifth Edition. 4s.; strongly bound in leather, 5s.

187. *HINTS TO YOUNG ARCHITECTS.* By G. Wightwick. New Edition. By G. H. Guillaume. Illustrated. 3s. 6d.‡

188. *HOUSE PAINTING, GRAINING, MARBLING, AND SIGN WRITING:* with a Course of Elementary Drawing for House-Painters, Sign-Writers, &c., and a Collection of Useful Receipts. By Ellis A. Davidson. Fifth Edition. With Coloured Plates. 5s. cloth limp; 6s. cloth boards.

189. *THE RUDIMENTS OF PRACTICAL BRICKLAYING.* In Six Sections: General Principles; Arch Drawing, Cutting, and Setting; Pointing; Paving, Tiling, Materials; Slating and Plastering; Practical Geometry, Mensuration, &c. By Adam Hammond. Seventh Edition. 1s. 6d.

191. *PLUMBING.* A Text-Book to the Practice of the Art or Craft of the Plumber. With Chapters upon House Drainage and Ventilation. Fifth Edition. With 380 Illustrations. By W. P. Buchan. 3s. 6d.‡

192. *THE TIMBER IMPORTER'S, TIMBER MERCHANT'S,* and BUILDER'S STANDARD GUIDE. By R. E. Grandy. 2s.

206. *A BOOK ON BUILDING, Civil and Ecclesiastical,* including Church Restoration. With the Theory of Domes and the Great Pyramid, &c. By Sir Edmund Beckett, Bart., LL.D., Q.C., F.R.A.S. 4s. 6d.‡

226. *THE JOINTS MADE AND USED BY BUILDERS* in the Construction of various kinds of Engineering and Architectural Works. By Wyvill J. Christy, Architect. With upwards of 160 Engravings on Wood. 3s.‡

228. *THE CONSTRUCTION OF ROOFS OF WOOD AND IRON.* By E. Wyndham Tarn, M.A., Architect. Second Edition, revised. 1s. 6d.

☞ *The ‡ indicates that these vols. may be had strongly bound at 6d. extra.*

Architecture, Building, etc., *continued.*

229. *ELEMENTARY DECORATION:* as applied to the Interior and Exterior Decoration of Dwelling-Houses, &c. By J. W. Facey. 2s.

257. *PRACTICAL HOUSE DECORATION.* A Guide to the Art of Ornamental Painting. By James W. Facey. 2s. 6d.

*** *The two preceding Works, in One handsome Vol., half-bound, entitled* "House Decoration, Elementary and Practical," *price* 5s.

230. *HANDRAILING.* Showing New and Simple Methods for finding the Pitch of the Plank, Drawing the Moulds, Bevelling, Jointing-up, and Squaring the Wreath. By George Collings. Second Edition, Revised including A Treatise on Stairbuilding. Plates and Diagrams. 2s. 6d.

247. *BUILDING ESTATES:* a Rudimentary Treatise on the Development, Sale, Purchase, and General Management of Building Land. By Fowler Maitland, Surveyor. Second Edition, revised. 2s.

248. *PORTLAND CEMENT FOR USERS.* By Henry Faija, Assoc. M. Inst. C.E. Third Edition, corrected. Illustrated. 2s.

252. *BRICKWORK:* a Practical Treatise, embodying the General and Higher Principles of Bricklaying, Cutting and Setting, &c. By F. Walker. Second Edition, Revised and Enlarged. 1s. 6d.

23. *THE PRACTICAL BRICK AND TILE BOOK.* Comprising:
189. Brick and Tile Making, by E. Dobson, A.I.C.E.; Practical Bricklay-
265. ing, by A. Hammond; Brickcutting and Setting, by A. Hammond. 534
pp. with 270 Illustrations. 6s. Strongly half-bound.

253. *THE TIMBER MERCHANT'S, SAW-MILLER'S, AND* IMPORTER'S FREIGHT-BOOK AND ASSISTANT. By Wm. Richardson. With a Chapter on Speeds of Saw-Mill Machinery, &c. By M. Powis Bale, A.M.Inst.C.E. 3s.‡

258. *CIRCULAR WORK IN CARPENTRY AND JOINERY.* A Practical Treatise on Circular Work of Single and Double Curvature. By George Collings. Second Edition, 2s. 6d.

259. *GAS FITTING:* A Practical Handbook treating of every Description of Gas Laying and Fitting. By John Black. With 122 Illustrations. 2s. 6d.‡

261. *SHORING AND ITS APPLICATION:* A Handbook for the Use of Students. By George H. Blagrove. 1s. 6d. [*Just published.*

265. *THE ART OF PRACTICAL BRICK CUTTING & SETTING.* By Adam Hammond. With 90 Engravings. 1s. 6d. [*Just published.*

267. *THE SCIENCE OF BUILDING:* An Elementary Treatise on the Principles of Construction. Adapted to the Requirements of Architectural Students. By E. Wyndham Tarn, M.A. Lond. Third Edition, Revised and Enlarged. With 59 Wood Engravings. 3s. 6d.‡ [*Just published.*

271. *VENTILATION:* a Text-book to the Practice of the Art of Ventilating Buildings, with a Supplementary Chapter upon Air Testing. By William Paton Buchan, R.P., Sanitary and Ventilating Engineer, Author of "Plumbing," &c. 3s. 6d.‡ [*Just published.*

SHIPBUILDING, NAVIGATION, MARINE ENGINEERING, ETC.

51. *NAVAL ARCHITECTURE.* An Exposition of the Elementary Principles of the Science, and their Practical Application to Naval Construction. By J. Peake. Fifth Edition, with Plates and Diagrams. 3s. 6d.‡

53*. *SHIPS FOR OCEAN & RIVER SERVICE,* Elementary and Practical Principles of the Construction of. By H. A. Sommerfeldt. 1s. 6d.

53**. *AN ATLAS OF ENGRAVINGS* to Illustrate the above. Twelve large folding plates. Royal 4to, cloth. 7s. 6d.

54. *MASTING, MAST-MAKING, AND RIGGING OF SHIPS,* Also Tables of Spars, Rigging, Blocks; Chain, Wire, and Hemp Ropes, &c., relative to every class of vessels. By Robert Kipping, N.A. 2s.

☞ *The ‡ indicates that these vols. may be had strongly bound at 6d. extra.*

Shipbuilding, Navigation, Marine Engineering, etc., *cont.*

54*. *IRON SHIP-BUILDING.* With Practical Examples and Details. By Johh Grantham, C.E. Fifth Edition. 4s.

55. *THE SAILOR'S SEA BOOK:* a Rudimentary Treatise on Navigation. By James Greenwood, B.A. With numerous Woodcuts and Coloured Plates. New and enlarged edition. By W. H. Rosser. 2s. 6d.‡

80. *MARINE ENGINES AND STEAM VESSELS.* By Robert Murray, C.E. Eighth Edition, thoroughly Revised, with Additions by the Author and by George Carlisle, C.E. 4s. 6d. limp; 5s. cloth boards.

83*bis*. *THE FORMS OF SHIPS AND BOATS.* By W. Bland. Seventh Edition, Revised, with numerous Illustrations and Models. 1s. 6d.

99. *NAVIGATION AND NAUTICAL ASTRONOMY,* in Theory and Practice. By Prof. J. R. Young. New Edition. 2s. 6d.

106. *SHIPS' ANCHORS,* a Treatise on. By G. Cotsell, N.A. 1s. 6d.

149. *SAILS AND SAIL-MAKING.* With Draughting, and the Centre of Effort of the Sails; Weights and Sizes of Ropes; Masting, Rigging, and Sails of Steam Vessels, &c. 12th Edition. By R. Kipping, N.A., 2s. 6d.‡

155. *ENGINEER'S GUIDE TO THE ROYAL & MERCANTILE* NAVIES. By a Practical Engineer. Revised by D. F. M'Carthy. 3s.

55 & 204. *PRACTICAL NAVIGATION.* Consisting of The Sailor's Sea-Book. By James Greenwood and W. H. Rosser. Together with the requisite Mathematical and Nautical Tables for the Working of the Problems. By H. Law, C.E., and Prof. J. R. Young. 7s. Half-bound.

AGRICULTURE, GARDENING, ETC.

61*. *A COMPLETE READY RECKONER FOR THE ADMEA*SUREMENT OF LAND, &c. By A. Arman. Third Edition, revised and extended by C. Norris, Surveyor, Valuer, &c. 2s.

131. *MILLER'S, CORN MERCHANT'S, AND FARMER'S* READY RECKONER. Second Edition, with a Price List of Modern Flour-Mill Machinery, by W. S. Hutton, C.E. 2s.

140. *SOILS, MANURES, AND CROPS.* (Vol. 1. Outlines of Modern Farming.) By R. Scott Burn. Woodcuts. 2s.

141. *FARMING & FARMING ECONOMY,* Notes, Historical and Practical, on. (Vol. 2. Outlines of Modern Farming.) By R. Scott Burn. 3s.

142. *STOCK; CATTLE, SHEEP, AND HORSES.* (Vol. 3. Outlines of Modern Farming.) By R. Scott Burn. Woodcuts. 2s. 6d.

145. *DAIRY, PIGS, AND POULTRY,* Management of the. By R. Scott Burn. (Vol. 4. Outlines of Modern Farming.) 2s.

146. *UTILIZATION OF SEWAGE, IRRIGATION, AND* RECLAMATION OF WASTE LAND. (Vol. 5. Outlines of Modern Farming.) By R. Scott Burn. Woodcuts. 2s. 6d.

⁂ *Nos.* 140-1-2-5-6, *in One Vol., handsomely half-bound, entitled* "Outlines of Modern Farming." By Robert Scott Burn. *Price* 12*s.*

177. *FRUIT TREES,* The Scientific and Profitable Culture of. From the French of Du Breuil. Revised by Geo. Glenny. 187 Woodcuts. 3s. 6d.‡

198. *SHEEP; THE HISTORY, STRUCTURE, ECONOMY, AND* DISEASES OF. By W. C. Spooner, M.R.V.C., &c. Fifth Edition, enlarged, including Specimens of New and Improved Breeds. 3s. 6d.‡

201. *KITCHEN GARDENING MADE EASY.* By George M. F. Glenny. Illustrated. 1s. 6d.‡

207. *OUTLINES OF FARM MANAGEMENT, and the Organization of Farm Labour.* By R. Scott Burn. 2s. 6d.‡

208. *OUTLINES OF LANDED ESTATES MANAGEMENT* By R. Scott Burn. 2s. 6d.‡

⁂ *Nos.* 207 & 208 *in One Vol., handsomely half-bound, entitled* "Outlines of Landed Estates and Farm Management." By R. Scott Burn. *Price* 6*s.*

☞ *The ‡ indicates that these vols. may be had strongly bound at* 6*d. extra.*

Agriculture, Gardening, etc., *continued.*

209. *THE TREE PLANTER AND PLANT PROPAGATOR.* A Practical Manual on the Propagation of Forest Trees, Fruit Trees, Flowering Shrubs, Flowering Plants, &c. By SAMUEL WOOD. 2s.

210. *THE TREE PRUNER.* A Practical Manual on the Pruning of Fruit Trees, including also their Training and Renovation; also the Pruning of Shrubs, Climbers, and Flowering Plants. By SAMUEL WOOD. 1s. 6d.

⁂ *Nos.* 209 *&* 210 *in One Vol., handsomely half-bound, entitled* "THE TREE PLANTER, PROPAGATOR, AND PRUNER." By SAMUEL WOOD. *Price* 3*s.* 6d.

218. *THE HAY AND STRAW MEASURER:* Being New Tables for the Use of Auctioneers, Valuers, Farmers, Hay and Straw Dealers, &c. By JOHN STEELE. Fourth Edition. 2s.

222. *SUBURBAN FARMING.* The Laying-out and Cultivation of Farms, adapted to the Produce of Milk, Butter, and Cheese, Eggs, Poultry, and Pigs. By Prof. JOHN DONALDSON and R. SCOTT BURN. 3s. 6d.‡

231. *THE ART OF GRAFTING AND BUDDING.* By CHARLES BALTET. With Illustrations. 2s. 6d.‡

232. *COTTAGE GARDENING;* or, Flowers, Fruits, and Vegetables for Small Gardens. By E. HOBDAY. 1s. 6d.

233. *GARDEN RECEIPTS.* Edited by CHARLES W. QUIN. 1s. 6d.

234. *MARKET AND KITCHEN GARDENING.* By C. W. SHAW, late Editor of "Gardening Illustrated." 3s.‡ [*Just published.*

239. *DRAINING AND EMBANKING.* A Practical Treatise, embodying the most recent experience in the Application of Improved Methods. By JOHN SCOTT, late Professor of Agriculture and Rural Economy at the Royal Agricultural College, Cirencester. With 68 Illustrations. 1s. 6d.

240. *IRRIGATION AND WATER SUPPLY.* A Treatise on Water Meadows, Sewage Irrigation, and Warping; the Construction of Wells, Ponds, and Reservoirs, &c. By Prof. JOHN SCOTT. With 34 Illus. 1s. 6d.

241. *FARM ROADS, FENCES, AND GATES.* A Practical Treatise on the Roads, Tramways, and Waterways of the Farm; the Principles of Enclosures; and the different kinds of Fences, Gates, and Stiles. By Professor JOHN SCOTT. With 75 Illustrations. 1s. 6d.

242. *FARM BUILDINGS.* A Practical Treatise on the Buildings necessary for various kinds of Farms, their Arrangement and Construction, with Plans and Estimates. By Prof. JOHN SCOTT. With 105 Illus. 2s.

243. *BARN IMPLEMENTS AND MACHINES.* A Practical Treatise on the Application of Power to the Operations of Agriculture; and on various Machines used in the Threshing-barn, in the Stock-yard, and in the Dairy, &c. By Prof. J. SCOTT. With 123 Illustrations. 2s.

244. *FIELD IMPLEMENTS AND MACHINES.* A Practical Treatise on the Varieties now in use, with Principles and Details of Construction, their Points of Excellence, and Management. By Professor JOHN SCOTT. With 138 Illustrations. 2s.

245. *AGRICULTURAL SURVEYING.* A Practical Treatise on Land Surveying, Levelling, and Setting-out; and on Measuring and Estimating Quantities, Weights, and Values of Materials, Produce, Stock, &c. By Prof. JOHN SCOTT. With 62 Illustrations. 1s. 6d.

⁂ *Nos.* 239 *to* 245 *in One Vol., handsomely half-bound, entitled* "THE COMPLETE TEXT-BOOK OF FARM ENGINEERING." By Professor JOHN SCOTT. *Price* 12*s.*

250. *MEAT PRODUCTION.* A Manual for Producers, Distributors, &c. By JOHN EWART. 2s. 6d.‡

266. *BOOK-KEEPING FOR FARMERS & ESTATE OWNERS.* By J. M. WOODMAN, Chartered Accountant. 2s. 6d. cloth limp; 3s. 6d. cloth boards. [*Just published.*

☞ *The ‡ indicates that these vols. may be had strongly bound at 6d. extra.*

MATHEMATICS, ARITHMETIC, ETC.

32. *MATHEMATICAL INSTRUMENTS,* a Treatise on; Their Construction, Adjustment, Testing, and Use concisely Explained. By J. F. Heather, M.A. Fourteenth Edition, revised, with additions, by A. T. Walmisley, M.I.C.E., Fellow of the Surveyors' Institution. Original Edition, in 1 vol., Illustrated. 2s.‡ [*Just published.*

⁂ *In ordering the above, be careful to say, "Original Edition" (No.* 32), *to distinguish it from the Enlarged Edition in* 3 *vols.* (*Nos.* 168-9-70.)

76. *DESCRIPTIVE GEOMETRY,* an Elementary Treatise on; with a Theory of Shadows and of Perspective, extracted from the French of G. Monge. To which is added, a description of the Principles and Practice of Isometrical Projection. By J. F. Heather, M.A. With 14 Plates. 2s.

178. *PRACTICAL PLANE GEOMETRY:* giving the Simplest Modes of Constructing Figures contained in one Plane and Geometrical Construction of the Ground. By J. F. Heather, M.A. With 215 Woodcuts. 2s.

83. *COMMERCIAL BOOK-KEEPING.* With Commercial Phrases and Forms in English, French, Italian, and German. By James Haddon, M.A., Arithmetical Master of King's College School, London. 1s. 6d.

84. *ARITHMETIC,* a Rudimentary Treatise on: with full Explanations of its Theoretical Principles, and numerous Examples for Practice. By Professor J. R. Young. Eleventh Edition. 1s. 6d.

84*. A Key to the above, containing Solutions in full to the Exercises, together with Comments, Explanations, and Improved Processes, for the Use of Teachers and Unassisted Learners. By J. R. Young. 1s. 6d.

85. *EQUATIONAL ARITHMETIC,* applied to Questions of Interest, Annuities, Life Assurance, and General Commerce; with various Tables by which all Calculations may be greatly facilitated. By W. Hipsley. 2s.

86. *ALGEBRA,* the Elements of. By James Haddon, M.A. With Appendix, containing miscellaneous Investigations, and a Collection of Problems in various parts of Algebra. 2s.

86*. A Key and Companion to the above Book, forming an extensive repository of Solved Examples and Problems in Illustration of the various Expedients necessary in Algebraical Operations. By J. R. Young. 1s. 6d.

88. 89. *EUCLID,* The Elements of: with many additional Propositions and Explanatory Notes: to which is prefixed, an Introductory Essay on Logic. By Henry Law, C.E. 2s. 6d.‡

⁂ *Sold also separately, viz.:—*

88. Euclid, The First Three Books. By Henry Law, C.E. 1s. 6d.

89. Euclid, Books 4, 5, 6, 11, 12. By Henry Law, C.E. 1s. 6d.

90. *ANALYTICAL GEOMETRY AND CONIC SECTIONS,* By James Hann. A New Edition, by Professor J. R. Young. 2s.‡

91. *PLANE TRIGONOMETRY,* the Elements of. By James Hann, formerly Mathematical Master of King's College, London. 1s. 6d.

92. *SPHERICAL TRIGONOMETRY,* the Elements of. By James Hann. Revised by Charles H. Dowling, C.E. 1s.

⁂ *Or with "The Elements of Plane Trigonometry," in One Volume, 2s.* 6d.

93. *MENSURATION AND MEASURING.* With the Mensuration and Levelling of Land for the Purposes of Modern Engineering. By T. Baker, C.E. New Edition by E. Nugent, C.E. Illustrated. 1s. 6d.

101. *DIFFERENTIAL CALCULUS,* Elements of the. By W. S. B. Woolhouse, F.R.A.S., &c. 1s. 6d.

102. *INTEGRAL CALCULUS,* Rudimentary Treatise on the. By Homersham Cox, B.A. Illustrated. 1s.

136. *ARITHMETIC,* Rudimentary, for the Use of Schools and Self-Instruction. By James Haddon, M.A. Revised by A. Arman. 1s. 6d.

137. A Key to Haddon's Rudimentary Arithmetic. By A. Arman. 1s. 6d.

☞ *The ‡ indicates that these vols. may be had strongly bound at* 6*d. extra.*

Mathematics, Arithmetic, etc., *continued.*

168. *DRAWING AND MEASURING INSTRUMENTS.* Including—I. Instruments employed in Geometrical and Mechanical Drawing, and in the Construction, Copying, and Measurement of Maps and Plans. II. Instruments used for the purposes of Accurate Measurement, and for Arithmetical Computations. By J. F. HEATHER, M.A. Illustrated. 1s. 6d.

169. *OPTICAL INSTRUMENTS.* Including (more especially) Telescopes, Microscopes, and Apparatus for producing copies of Maps and Plans by Photography. By J. F. HEATHER, M.A. Illustrated. 1s. 6d.

170. *SURVEYING AND ASTRONOMICAL INSTRUMENTS.* Including—I. Instruments Used for Determining the Geometrical Features of a portion of Ground. II. Instruments Employed in Astronomical Observations. By J. F. HEATHER, M.A. Illustrated. 1s. 6d.

⁂ *The above three volumes form an enlargement of the Author's original work "Mathematical Instruments." (See No. 32 in the Series.)*

168.
169.
170. } *MATHEMATICAL INSTRUMENTS.* By J. F. HEATHER, M.A. Enlarged Edition, for the most part entirely re-written. The 3 Parts as above, in One thick Volume. With numerous Illustrations. 4s. 6d.‡

158. *THE SLIDE RULE, AND HOW TO USE IT;* containing full, easy, and simple Instructions to perform all Business Calculations with unexampled rapidity and accuracy. By CHARLES HOARE, C.E. Fifth Edition. With a Slide Rule in tuck of cover. 2s. 6d.‡

196. *THEORY OF COMPOUND INTEREST AND ANNUITIES;* with Tables of Logarithms for the more Difficult Computations of Interest, Discount, Annuities, &c. By FÉDOR THOMAN. 4s.‡

199. *THE COMPENDIOUS CALCULATOR;* or, Easy and Concise Methods of Performing the various Arithmetical Operations required in Commercial and Business Transactions; together with Useful Tables. By D. O'GORMAN. Twenty-seventh Edition, carefully revised by C. NORRIS. 2s. 6d., cloth limp; 3s. 6d., strongly half-bound in leather.

204. *MATHEMATICAL TABLES,* for Trigonometrical, Astronomical, and Nautical Calculations; to which is prefixed a Treatise on Logarithms. By HENRY LAW, C.E. Together with a Series of Tables for Navigation and Nautical Astronomy. By Prof. J. R. YOUNG. New Edition. 4s.

204*. *LOGARITHMS.* With Mathematical Tables for Trigonometrical, Astronomical, and Nautical Calculations. By HENRY LAW, M.Inst.C.E. New and Revised Edition. (Forming part of the above Work). 3s.

221. *MEASURES, WEIGHTS, AND MONEYS OF ALL NATIONS,* and an Analysis of the Christian, Hebrew, and Mahometan Calendars. By W. S. B. WOOLHOUSE, F.R.A.S., F.S.S. Sixth Edition. 2s.‡

227. *MATHEMATICS AS APPLIED TO THE CONSTRUCTIVE ARTS.* Illustrating the various processes of Mathematical Investigation, by means of Arithmetical and Simple Algebraical Equations and Practical Examples. By FRANCIS CAMPIN, C.E. Second Edition. 3s.‡

PHYSICAL SCIENCE, NATURAL PHILOSOPHY, ETC.

1. *CHEMISTRY.* By Professor GEORGE FOWNES, F.R.S. With an Appendix on the Application of Chemistry to Agriculture. 1s.

2. *NATURAL PHILOSOPHY,* Introduction to the Study of. By C. TOMLINSON. Woodcuts. 1s. 6d.

6. *MECHANICS,* Rudimentary Treatise on. By CHARLES TOMLINSON. Illustrated. 1s. 6d.

7. *ELECTRICITY;* showing the General Principles of Electrical Science, and the purposes to which it has been applied. By Sir W. SNOW HARRIS, F.R.S., &c. With Additions by R. SABINE, C.E., F.S.A. 1s. 6d.

7*. *GALVANISM.* By Sir W. SNOW HARRIS. New Edition by ROBERT SABINE, C.E., F.S.A. 1s. 6d.

8. *MAGNETISM;* being a concise Exposition of the General Principles of Magnetical Science. By Sir W. SNOW HARRIS. New Edition, revised by H. M. NOAD, Ph.D. With 165 Woodcuts. 3s. 6d.‡

☞ *The ‡ indicates that these vols. may be had strongly bound at 6d. extra.*

Physical Science, Natural Philosophy, etc., *continued.*

11\. *THE ELECTRIC TELEGRAPH;* its History and Progress; with Descriptions of some of the Apparatus. By R. SABINE, C.E., F.S.A. 3s.

12\. *PNEUMATICS,* including Acoustics and the Phenomena of Wind Currents, for the Use of Beginners. By CHARLES TOMLINSON, F.R.S. Fourth Edition, enlarged. Illustrated. 1s. 6d. [*Just published.*

72\. *MANUAL OF THE MOLLUSCA;* a Treatise on Recent and Fossil Shells. By Dr. S. P. WOODWARD, A.L.S. Fourth Edition. With Plates and 300 Woodcuts. 7s. 6d., cloth.

96\. *ASTRONOMY.* By the late Rev. ROBERT MAIN, M.A. Third Edition, by WILLIAM THYNNE LYNN, B.A., F.R.A.S. 2s.

97\. *STATICS AND DYNAMICS,* the Principles and Practice of; embracing also a clear development of Hydrostatics, Hydrodynamics, and Central Forces. By T. BAKER, C.E. Fourth Edition. 1s. 6d.

173\. *PHYSICAL GEOLOGY,* partly based on Major-General PORTLOCK's "Rudiments of Geology." By RALPH TATE, A.L.S., &c. Woodcuts. 2s.

174\. *HISTORICAL GEOLOGY,* partly based on Major-General PORTLOCK's "Rudiments." By RALPH TATE, A.L.S., &c. Woodcuts. 2s. 6d.

173 & 174. *RUDIMENTARY TREATISE ON GEOLOGY,* Physical and Historical. Partly based on Major-General PORTLOCK's "Rudiments of Geology." By RALPH TATE, A.L.S., F.G.S., &c. In One Volume. 4s. 6d.‡

183 & 184. *ANIMAL PHYSICS,* Handbook of. By Dr. LARDNER, D.C.L., formerly Professor of Natural Philosophy and Astronomy in University College, Lond. With 520 Illustrations. In One Vol. 7s. 6d., cloth boards.

*** *Sold also in Two Parts, as follows:—*

183\. ANIMAL PHYSICS. By Dr. LARDNER. Part I., Chapters I.—VII. 4s.

184\. ANIMAL PHYSICS. By Dr. LARDNER. Part II., Chapters VIII.—XVIII. 3s.

269\. *LIGHT:* an Introduction to the Science of Optics, for the Use of Students of Architecture, Engineering, and other Applied Sciences. By E. WYNDHAM TARN, M.A. 1s. 6d. [*Just published.*

FINE ARTS.

20\. *PERSPECTIVE FOR BEGINNERS.* Adapted to Young Students and Amateurs in Architecture, Painting, &c. By GEORGE PYNE. 2s.

40 *GLASS STAINING, AND THE ART OF PAINTING ON GLASS.* From the German of Dr. GESSERT and EMANUEL OTTO FROMBERG. With an Appendix on THE ART OF ENAMELLING. 2s. 6d.

69\. *MUSIC,* A Rudimentary and Practical Treatise on. With numerous Examples. By CHARLES CHILD SPENCER. 2s. 6d.

71\. *PIANOFORTE,* The Art of Playing the. With numerous Exercises & Lessons from the Best Masters. By CHARLES CHILD SPENCER. 1s.6d.

69-71. *MUSIC & THE PIANOFORTE.* In one vol. Half bound, 5s.

181\. *PAINTING POPULARLY EXPLAINED,* including Fresco, Oil, Mosaic, Water Colour, Water-Glass, Tempera, Encaustic, Miniature, Painting on Ivory, Vellum, Pottery, Enamel, Glass, &c. With Historical Sketches of the Progress of the Art by THOMAS JOHN GULLICK, assisted by JOHN TIMBS, F.S.A. Fifth Edition, revised and enlarged. 5s.‡

186\. *A GRAMMAR OF COLOURING,* applied to Decorative Painting and the Arts. By GEORGE FIELD. New Edition, enlarged and adapted to the Use of the Ornamental Painter and Designer. By ELLIS A. DAVIDSON. With two new Coloured Diagrams, &c. 3s.‡

246\. *A DICTIONARY OF PAINTERS, AND HANDBOOK FOR* PICTURE AMATEURS; including Methods of Painting, Cleaning, Relining and Restoring, Schools of Painting, &c. With Notes on the Copyists and Imitators of each Master. By PHILIPPE DARYL. 2s. 6d.‡

☞ *The ‡ indicates that these vols. may be had strongly bound at 6d. extra.*

INDUSTRIAL AND USEFUL ARTS.

23. *BRICKS AND TILES,* Rudimentary Treatise on the Manufacture of. By E. Dobson, M.R.I.B.A. Illustrated, 3s.‡

67. *CLOCKS, WATCHES, AND BELLS,* a Rudimentary Treatise on. By Sir Edmund Beckett, LL.D., Q.C. Seventh Edition, revised and enlarged. 4s. 6d. limp; 5s. 6d. cloth boards.

83**. *CONSTRUCTION OF DOOR LOCKS.* Compiled from the Papers of A. C. Hobbs, and Edited by Charles Tomlinson, F.R.S. 2s. 6d.

162. *THE BRASS FOUNDER'S MANUAL;* Instructions for Modelling, Pattern-Making, Moulding, Turning, Filing, Burnishing, Bronzing, &c. With copious Receipts, &c. By Walter Graham. 2s.‡

205. *THE ART OF LETTER PAINTING MADE EASY.* By J. G. Badenoch. Illustrated with 12 full-page Engravings of Examples. 1s. 6d.

215. *THE GOLDSMITH'S HANDBOOK,* containing full Instructions for the Alloying and Working of Gold. By George E. Gee, 3s.‡

225. *THE SILVERSMITH'S HANDBOOK,* containing full Instructions for the Alloying and Working of Silver. By George E. Gee. 3s.‡

⁂ *The two preceding Works, in One handsome Vol., half-bound, entitled* "The Goldsmith's & Silversmith's Complete Handbook," 7*s.*

249. *THE HALL-MARKING OF JEWELLERY PRACTICALLY CONSIDERED.* By George E. Gee. 3s.‡

224. *COACH BUILDING,* A Practical Treatise, Historical and Descriptive. By J. W. Burgess. 2s. 6d.‡

235. *PRACTICAL ORGAN BUILDING.* By W. E. Dickson, M.A., Precentor of Ely Cathedral. Illustrated. 2s. 6d.‡

262. *THE ART OF BOOT AND SHOEMAKING.* By John Bedford Leno. Numerous Illustrations. Third Edition. 2s.

263. *MECHANICAL DENTISTRY:* A Practical Treatise on the Construction of the Various Kinds of Artificial Dentures, with Formulæ, Tables, Receipts, &c. By Charles Hunter. Third Edition. 3s.‡

270. *WOOD ENGRAVING:* A Practical and Easy Introduction to the Study of the Art. By W. N. Brown. 1s. 6d.

MISCELLANEOUS VOLUMES.

36. *A DICTIONARY OF TERMS used in ARCHITECTURE, BUILDING, ENGINEERING, MINING, METALLURGY, ARCHÆOLOGY, the FINE ARTS, &c.* By John Weale. Fifth Edition. Revised by Robert Hunt, F.R.S. Illustrated. 5s. limp; 6s. cloth boards.

50. *THE LAW OF CONTRACTS FOR WORKS AND SERVICES.* By David Gibbons. Third Edition, enlarged. 3s.‡

112. *MANUAL OF DOMESTIC MEDICINE.* By R. Gooding, B.A., M.D. A Family Guide in all Cases of Accident and Emergency. 2s.‡

112*. *MANAGEMENT OF HEALTH.* A Manual of Home and Personal Hygiene. By the Rev. James Baird, B.A. 1s.

150. *LOGIC,* Pure and Applied. By S. H. Emmens. 1s. 6d.

153. *SELECTIONS FROM LOCKE'S ESSAYS ON THE HUMAN UNDERSTANDING.* With Notes by S. H. Emmens. 2s.

154. *GENERAL HINTS TO EMIGRANTS.* 2s.

157. *THE EMIGRANT'S GUIDE TO NATAL.* By Robert James Mann, F.R.A.S., F.M.S. Second Edition. Map. 2s.

193. *HANDBOOK OF FIELD FORTIFICATION.* By Major W. W. Knollys, F.R.G.S. With 163 Woodcuts. 3s.‡

194. *THE HOUSE MANAGER:* Being a Guide to Housekeeping. Practical Cookery, Pickling and Preserving, Household Work, Dairy Management, &c. By An Old Housekeeper. 3s. 6d.‡

194, *HOUSE BOOK (The).* Comprising:—I. The House Manager.
112 & By an Old Housekeeper. II. Domestic Medicine. By R. Gooding, M.D.
112*. III. Management of Health. By J. Baird. In One Vol., half-bound, 6s.

☞ *The ‡ indicates that these vols may be had strongly bound at 6d. extra.*

EDUCATIONAL AND CLASSICAL SERIES.

HISTORY.

1. **England, Outlines of the History of;** more especially with reference to the Origin and Progress of the English Constitution. By William Douglas Hamilton, F.S.A., of Her Majesty's Public Record Office. 4th Edition, revised. 5s.; cloth boards, 6s.

5. **Greece, Outlines of the History of;** in connection with the Rise of the Arts and Civilization in Europe. By W. Douglas Hamilton, of University College, London, and Edward Levien, M.A., of Balliol College, Oxford. 2s. 6d.; cloth boards, 3s. 6d.

7. **Rome, Outlines of the History of:** from the Earliest Period to the Christian Era and the Commencement of the Decline of the Empire. By Edward Levien, of Balliol College, Oxford. Map, 2s. 6d.; cl. bds. 3s. 6d.

9. **Chronology of History, Art, Literature, and Progress,** from the Creation of the World to the Present Time. The Continuation by W. D. Hamilton, F.S.A. 3s.; cloth boards, 3s. 6d.

50. **Dates and Events in English History,** for the use of Candidates in Public and Private Examinations. By the Rev. E. Rand. 1s.

ENGLISH LANGUAGE AND MISCELLANEOUS.

11. **Grammar of the English Tongue,** Spoken and Written. With an Introduction to the Study of Comparative Philology. By Hyde Clarke, D.C.L. Fourth Edition. 1s. 6d.

12. **Dictionary of the English Language,** as Spoken and Written. Containing above 100,000 Words. By Hyde Clarke, D.C.L. 3s. 6d.; cloth boards, 4s. 6d.; complete with the Grammar, cloth bds., 5s. 6d.

48. **Composition and Punctuation,** familiarly Explained for those who have neglected the Study of Grammar. By Justin Brenan. 18th Edition. 1s. 6d.

49. **Derivative Spelling-Book:** Giving the Origin of Every Word from the Greek, Latin, Saxon, German, Teutonic, Dutch, French, Spanish, and other Languages; with their present Acceptation and Pronunciation. By J. Rowbotham, F.R.A.S. Improved Edition. 1s. 6d.

51. **The Art of Extempore Speaking:** Hints for the Pulpit, the Senate, and the Bar. By M. Bautain, Vicar-General and Professor at the Sorbonne. Translated from the French. 8th Edition, carefully corrected. 2s. 6d.

53. **Places and Facts in Political and Physical Geography,** for Candidates in Examinations. By the Rev. Edgar Rand, B.A. 1s.

54. **Analytical Chemistry, Qualitative and Quantitative, a Course of.** To which is prefixed, a Brief Treatise upon Modern Chemical Nomenclature and Notation. By Wm. W. Pink and George E. Webster. 2s.

THE SCHOOL MANAGERS' SERIES OF READING BOOKS,

Edited by the Rev. A. R. Grant, Rector of Hitcham, and Honorary Canon of Ely; formerly H.M. Inspector of Schools.

Introductory Primer, 3*d.*

	s.	*d.*		*s.*	*d.*
First Standard . .	0	6	Fourth Standard	1	2
Second ,, . .	0	10	Fifth ,, ...	1	6
Third ,, . .	1	0	Sixth ,, ...	1	6

Lessons from the Bible. Part I. Old Testament. 1s.

Lessons from the Bible. Part II. New Testament, to which is added The Geography of the Bible, for very young Children. By Rev. C. Thornton Forster. 1s. 2d. *** Or the Two Parts in One Volume. 2s.

FRENCH.

24. **French Grammar.** With Complete and Concise Rules on the Genders of French Nouns. By G. L. STRAUSS, Ph.D. 1s. 6d.

25. **French-English Dictionary.** Comprising a large number of New Terms used in Engineering, Mining, &c. By ALFRED ELWES. 1s. 6d.

26. **English-French Dictionary.** By ALFRED ELWES. 2s.

25,26. **French Dictionary** (as above). Complete, in One Vol., 3s.; cloth boards, 3s. 6d. *** Or with the GRAMMAR, cloth boards, 4s. 6d.

47. **French and English Phrase Book:** containing Introductory Lessons, with Translations, several Vocabularies of Words, a Collection of suitable Phrases, and Easy Familiar Dialogues. 1s. 6d.

GERMAN.

39. **German Grammar.** Adapted for English Students, from Heyse's Theoretical and Practical Grammar, by Dr. G. L. STRAUSS. 1s. 6d.

40. **German Reader:** A Series of Extracts, carefully culled from the most approved Authors of Germany; with Notes, Philological and Explanatory. By G. L. STRAUSS, Ph.D. 1s.

41-43. **German Triglot Dictionary.** By N. E. S. A. HAMILTON. In Three Parts. Part I. German-French-English. Part II. English-German-French. Part III. French-German-English. 3s., or cloth boards, 4s.

41-43 & 39. **German Triglot Dictionary** (as above), together with German Grammar (No. 39), in One Volume, cloth boards, 5s.

ITALIAN.

27. **Italian Grammar,** arranged in Twenty Lessons, with a Course of Exercises. By ALFRED ELWES. 1s. 6d.

28. **Italian Triglot Dictionary,** wherein the Genders of all the Italian and French Nouns are carefully noted down. By ALFRED ELWES. Vol. 1. Italian-English-French. 2s. 6d.

30. **Italian Triglot Dictionary.** By A. ELWES. Vol. 2. English-French-Italian. 2s. 6d.

32. **Italian Triglot Dictionary.** By ALFRED ELWES. Vol. 3. French-Italian-English. 2s. 6d.

28,30, 32. **Italian Triglot Dictionary** (as above). In One Vol., 7s. 6d. Cloth boards.

SPANISH AND PORTUGUESE.

34. **Spanish Grammar,** in a Simple and Practical Form. With a Course of Exercises. By ALFRED ELWES. 1s. 6d.

35. **Spanish-English and English-Spanish Dictionary.** Including a large number of Technical Terms used in Mining, Engineering, &c. with the proper Accents and the Gender of every Noun. By ALFRED ELWES 4s.; cloth boards, 5s. *** Or with the GRAMMAR, cloth boards, 6s.

55. **Portuguese Grammar,** in a Simple and Practical Form. With a Course of Exercises. By ALFRED ELWES. 1s. 6d.

56. **Portuguese-English and English-Portuguese Dictionary.** Including a large number of Technical Terms used in Mining, Engineering, &c., with the proper Accents and the Gender of every Noun. By ALFRED ELWES. Second Edition, Revised, 5s.; cloth boards, 6s. *** Or with the GRAMMAR, cloth boards, 7s.

HEBREW.

46*. **Hebrew Grammar.** By Dr. BRESSLAU. 1s. 6d.

44. **Hebrew and English Dictionary,** Biblical and Rabbinical; containing the Hebrew and Chaldee Roots of the Old Testament Post-Rabbinical Writings. By Dr. BRESSLAU. 6s.

46. **English and Hebrew Dictionary.** By Dr. BRESSLAU. 3s.

44,46. 46*. **Hebrew Dictionary** (as above), in Two Vols., complete, with the GRAMMAR, cloth boards, 12s.

LATIN.

19\. **Latin Grammar.** Containing the Inflections and Elementary Principles of Translation and Construction. By the Rev. THOMAS GOODWIN, M.A., Head Master of the Greenwich Proprietary School. 1s. 6d.

20\. **Latin-English Dictionary.** By the Rev. THOMAS GOODWIN, M.A. 2s.

22\. **English-Latin Dictionary;** together with an Appendix of French and Italian Words which have their origin from the Latin. By the Rev. THOMAS GOODWIN, M.A. 1s. 6d.

20,22. **Latin Dictionary** (as above). Complete in One Vol., 3s. 6d. cloth boards, 4s. 6d. ⁂ Or with the GRAMMAR, cloth boards, 5s. 6d.

LATIN CLASSICS. With Explanatory Notes in English.

1\. **Latin Delectus.** Containing Extracts from Classical Authors, with Genealogical Vocabularies and Explanatory Notes, by H. YOUNG. 1s. 6d.

2\. **Cæsaris Commentarii de Bello Gallico.** Notes, and a Geographical Register for the Use of Schools, by H. YOUNG. 2s.

3\. **Cornelius Nepos.** With Notes. By H. YOUNG. 1s.

4\. **Virgilii** Maronis Bucolica et Georgica. With Notes on the Bucolics by W. RUSHTON, M.A., and on the Georgics by H. YOUNG. 1s. 6d.

5\. **Virgilii** Maronis Æneis. With Notes, Critical and Explanatory, by H. YOUNG. New Edition, revised and improved With copious Additional Notes by Rev. T. H. L. LEARY, D.C.L., formerly Scholar of Brasenose College, Oxford. 3s.

5* ——— Part 1. Books i.—vi., 1s. 6d.

5** ——— Part 2. Books vii.—xii., 2s.

6\. **Horace;** Odes, Epode, and Carmen Sæculare. Notes by H. YOUNG. 1s. 6d.

7\. **Horace;** Satires, Epistles, and Ars Poetica. Notes by W. BROWNRIGG SMITH, M.A., F.R.G.S. 1s. 6d.

8\. **Sallustii** Crispi Catalina et Bellum Jugurthinum. Notes, Critical and Explanatory, by W. M. DONNE, B.A., Trin. Coll., Cam. 1s. 6d.

9\. **Terentii** Andria et Heautontimorumenos. With Notes, Critical and Explanatory, by the Rev. JAMES DAVIES, M.A. 1s. 6d.

10\. **Terentii** Adelphi, Hecyra, Phormio. Edited, with Notes, Critical and Explanatory, by the Rev. JAMES DAVIES, M.A. 2s.

11\. **Terentii** Eunuchus, Comœdia. Notes, by Rev. J. DAVIES, M.A. 1s. 6d.

12\. **Ciceronis** Oratio pro Sexto Roscio Amerino. Edited, with an Introduction, Analysis, and Notes, Explanatory and Critical, by the Rev JAMES DAVIES, M.A. 1s. 6d.

13\. **Ciceronis** Orationes in Catilinam, Verrem, et pro Archia. With Introduction, Analysis, and Notes, Explanatory and Critical, by Rev. T. H. L. LEARY, D.C.L. formerly Scholar of Brasenose College, Oxford. 1s. 6d.

14\. **Ciceronis** Cato Major, Lælius, Brutus, sive de Senectute, de Amicitia, de Claris Oratoribus Dialogi. With Notes by W. BROWNRIGG SMITH M.A., F.R.G.S. 2s.

16\. **Livy:** History of Rome. Notes by H. YOUNG and W. B. SMITH, M.A. Part 1. Books i., ii., 1s. 6d.

16*. ——— Part 2. Books iii., iv., v., 1s. 6d.

17\. ——— Part 3. Books xxi., xxii., 1s. 6d.

19\. **Latin Verse Selections,** from Catullus, Tibullus, Propertius, and Ovid. Notes by W. B. DONNE, M.A., Trinity College, Cambridge. 2s.

20\. **Latin Prose Selections,** from Varro, Columella, Vitruvius, Seneca, Quintilian, Florus, Velleius Paterculus, Valerius Maximus Suetonius, Apuleius, &c. Notes by W. B. DONNE, M.A. 2s.

21\. **Juvenalis** Satiræ. With Prolegomena and Notes by T. H. S. ESCOTT, B.A., Lecturer on Logic at King's College, London. 2s.

GREEK.

14. **Greek Grammar**, in accordance with the Principles and Philological Researches of the most eminent Scholars of our own day. By HANS CLAUDE HAMILTON. 1s. 6d.

15, 17. **Greek Lexicon.** Containing all the Words in General Use, with their Significations, Inflections, and Doubtful Quantities. By HENRY R. HAMILTON. Vol. 1. Greek-English, 2s. 6d.; Vol. 2. English-Greek, 2s. Or the Two Vols. in One, 4s. 6d.: cloth boards, 5s.

14, 15, 17. **Greek Lexicon** (as above). Complete, with the GRAMMAR, in One Vol., cloth boards, 6s.

GREEK CLASSICS. With Explanatory Notes in English.

1. **Greek Delectus.** Containing Extracts from Classical Authors, with Genealogical Vocabularies and Explanatory Notes, by H. YOUNG. New Edition, with an improved and enlarged Supplementary Vocabulary, by JOHN HUTCHISON, M.A., of the High School, Glasgow. 1s. 6d.

2, 3. **Xenophon's Anabasis**; or, The Retreat of the Ten Thousand. Notes and a Geographical Register, by H. YOUNG. Part 1. Books i. to iii., 1s. Part 2. Books iv. to vii., 1s.

4. **Lucian's Select Dialogues.** The Text carefully revised, with Grammatical and Explanatory Notes, by H. YOUNG. 1s. 6d.

5-12. **Homer, The Works of.** According to the Text of BAEUMLEIN. With Notes, Critical and Explanatory, drawn from the best and latest Authorities, with Preliminary Observations and Appendices, by T. H. L. LEARY, M.A., D.C.L.

THE ILIAD:	Part 1. Books i. to vi., 1s. 6d.	Part 3. Books xiii. to xviii., 1s. 6d.
	Part 2. Books vii. to xii., 1s. 6d.	Part 4. Books xix. to xxiv., 1s. 6d.
THE ODYSSEY:	Part 1. Books i. to vi., 1s. 6d	Part 3. Books xiii. to xviii., 1s. 6d.
	Part 2. Books vii. to xii., 1s. 6d.	Part 4. Books xix. to xxiv., and Hymns, 2s.

13. **Plato's Dialogues**: The Apology of Socrates, the Crito, and the Phædo. From the Text of C. F. HERMANN. Edited with Notes, Critical and Explanatory, by the Rev. JAMES DAVIES, M.A. 2s.

14-17. **Herodotus, The History of**, chiefly after the Text of GAISFORD. With Preliminary Observations and Appendices, and Notes, Critical and Explanatory, by T. H. L. LEARY, M.A., D.C.L.

Part 1. Books i., ii. (The Clio and Euterpe), 2s.
Part 2. Books iii., iv. (The Thalia and Melpomene), 2s.
Part 3. Books v.-vii. (The Terpsichore, Erato, and Polymnia), 2s.
Part 4. Books viii., ix. (The Urania and Calliope) and Index, 1s. 6d.

18. **Sophocles**: Œdipus Tyrannus. Notes by H. YOUNG. 1s.

20. **Sophocles**: Antigone. From the Text of DINDORF. Notes, Critical and Explanatory, by the Rev. JOHN MILNER, B.A. 2s.

23. **Euripides**: Hecuba and Medea. Chiefly from the Text of DINDORF. With Notes, Critical and Explanatory, by W. BROWNRIGG SMITH, M.A., F.R.G.S. 1s. 6d.

26. **Euripides**: Alcestis. Chiefly from the Text of DINDORF. With Notes, Critical and Explanatory, by JOHN MILNER, B.A. 1s. 6d.

30. **Æschylus**: Prometheus Vinctus: The Prometheus Bound. From the Text of DINDORF. Edited, with English Notes, Critical and Explanatory, by the Rev. JAMES DAVIES, M.A. 1s.

32. **Æschylus**: Septem Contra Thebes: The Seven against Thebes. From the Text of DINDORF. Edited, with English Notes, Critical and Explanatory, by the Rev. JAMES DAVIES, M.A. 1s.

40. **Aristophanes**: Acharnians. Chiefly from the Text of C. H. WEISE. With Notes, by C. S. T. TOWNSHEND, M.A. 1s. 6d.

41. **Thucydides**: History of the Peloponnesian War. Notes by H. YOUNG. Book 1. 1s. 6d.

42. **Xenophon's Panegyric on Agesilaus.** Notes and Introduction by LL. F. W. JEWITT. 1s. 6d.

43. **Demosthenes.** The Oration on the Crown and the Philippics. With English Notes. By Rev. T. H. L. LEARY, D.C.L., formerly Scholar of Brasenose College, Oxford. 1s. 6d.